GENERAL NOTES

1. IT SHALL BE THE RESPONSIBILITY OF THE CONTRACTOR TO CLEAR THE RIGHT OF WAY IN ACCORDANCE WITH THE PROVISIONS OF LAW AS IT AFFECTS EACH UTILITY INCLUDING IRRIGATION LINES AND APPURTENANCES AND AT NO COST TO THE CITY.
2. CONSTRUCTION SHALL BE IN ACCORDANCE WITH THE CITY OF RIVERSIDE DEPARTMENT OF PUBLIC WORKS STANDARD DRAWINGS, STANDARD DRAWING NO. 10 AND THE STANDARD SPECIFICATIONS FOR PUBLIC WORKS CONSTRUCTION, CURRENT EDITION.
3. THE PRIVATE ENGINEER SIGNING THESE PLANS IS RESPONSIBLE FOR ASSURING THE ACCURACY AND ACCEPTIBILITY OF THE WORK HEREON. IN THE EVENT OF DISCREPANCIES ARISING DURING CONSTRUCTION, THE PRIVATE ENGINEER SHALL BE RESPONSIBLE FOR DETERMINING AN ACCEPTABLE SOLUTION AND REVISING THE PLANS FOR APPROVAL BY THE CITY.
4. QUANTITIES SHOWN ARE FOR INFORMATION ONLY AND THE CITY OF RIVERSIDE IS NOT RESPONSIBLE FOR THEIR ACCURACY.
5. THE DEVELOPER SHALL BE RESPONSIBLE FOR PRESERVING OR RE-ESTABLISHING AND REFERENCING SURVEY MONUMENTS DESTROYED, DISTURBED OR BURIED AS A RESULT OF CONSTRUCTION SHOWN HEREON.
6. ALL FLAGGED ELEVATIONS SHALL BE STAKED IN THE FIELD BY THE PRIVATE ENGINEER.
7. TRIM EDGE OF EXISTING PAVEMENT WHERE NEW PAVEMENT JOINS TO A SMOOTH, STRAIGHT LINE. CONSTRUCT MATCH-UP PAVING AS SHOWN ON PLAN AND OVERLAY PAVING AS DIRECTED IN THE FIELD TO PRODUCE A SMOOTH SECTION.
8. CONSTRUCT DRIVEWAY APPROACHES PER STANDARD DRAWING 302. EXACT SIZE AND LOCATION TO BE AS SHOWN.
9. THE CONTRACTOR SHALL CALL IN A LOCATION REQUEST TO UNDERGROUND SERVICE ALERT (USA), PHONE NO. 1-800-422-4133, TWO WORKING DAYS BEFORE DIGGING. NO CONSTRUCTION PERMIT WILL BE ISSUED BY THE PUBLIC WORKS DEPARTMENT INVOLVING EXCAVATION FOR UNDERGROUND FACILITIES UNLESS THE APPLICANT HAS BEEN PROVIDED AN INQUIRY INDENTIFICATION NUMBER BY USA.
10. CONTRACTOR IS TO VERIFY EXISTING SEWER ELEVATION PRIOR TO CONSTRUCTION.
11. LOCATION OF LATERALS TO BE DETERMINED IN THE FIELD AT THE DIRECTION OF THE OWNER. AVOID CONFLICT WITH PROPOSED AND/OR EXISTING FACILITIES.
12. NO FINISHED FLOOR ELEVATION SHALL BE LESS THAN 4' ABOVE THE SEWER FLOW LINE AT POINT OF CONNECTION WITHOUT HAVING A PROPER BACKWATER VALVE INSTALLED IN THE LATERAL.
13. A PLUG SHALL BE INSTALLED AND WILL REMAIN IN PLACE WHERE THE NEW SEWER CONNECTS WITH THE EXISTING SEWER UNTIL THE NEW SEWER IS ACCEPTED BY THE CITY.
14. THE SEWER CONTRACTOR SHALL ADJUST MANHOLES TO FINAL GRADE AFTER PAVING IS COMPLETED.
15. IN PAVEMENT OVERLAY AREAS, DISTRESSED EXISTING PAVEMENT SHALL BE REMOVED AND REPLACED AS DIRECTED BY THE INSPECTOR PRIOR TO OVERLAYING.
16. ALL TRAFFIC SIGNS SHALL BE INSTALLED PRIOR TO OPENING THE STREETS TO TRAFFIC.
17. ANY TRAFFIC CONTROL STRIPING OBLITERATED AND/OR BADLY WORN DURING CONSTRUCTION SHALL BE RESTORED BY THE CONTRACTOR WITHIN FIVE DAYS AFTER NOTIFICATION FROM THE CITY INSPECTORS.
18. FINAL STRIPING FOR TRAFFIC CONTROL AND/OR PAVEMENT MARKING TO BE THE RESPONSIBILITY OF THE DEVELOPER.
19. DEVELOPER TO GIVE CITY WATER DIVISION FIVE (5) WORKING DAYS WRITTEN NOTICE PRIOR TO START OF CONSTRUCTION AND TO ALLOW CITY TEN (10) WORKING DAYS FOR COMPLETION OF WORK. (714-351-6150)
20. ON ALL AREAS WITHIN PUBLIC RIGHT OF WAY WHERE THE FILL IS ONE FOOT OR GREATER, A LETTER WILL BE REQUIRED FROM THE SOILS ENGINEER CERTIFYING THE COMPACTION OF THE FILL BELOW SUBGRADE PRIOR TO ISSUANCE OF THE CONSTRUCTION PERMIT/CUT SHEETS.
21. *METROPOLITAN REQUESTS THAT MR. ART KNOOP OF OUR OPERATIONS SERVICES BRANCH, TELEPHONE (213) 250-6432, BE NOTIFIED AT LEAST TWO WORKING DAYS PRIOR TO ANY WORK IN THE VICINITY OF OUR FACILITIES.*

PARKS DEPARTMENT NOTES

1. ALL RELATED WORK SHALL CONFORM TO THE CITY OF RIVERSIDE PARK AND RECREATION DEPARTMENT STANDARDS.
2. CONTACT THE STREET TREE INSPECTOR A MINIMUM OF 48 HOURS IN ADVANCE AT (714) 351-6126 TO SCHEDULE INSPECTION. INSPECTIONS SHALL BE REQUIRED:
   A) WHEN PLANT LOCATIONS HAVE BEEN SPOTTED IN THE FIELD PRIOR TO DIGGING PLANT PITS.
   B) WHILE DIGGING PLANT PITS AND PLANTING/RELOCATING TREES.
   C) AFTER PLANTING AND ALL OTHER INDICATED OR SPECIFIED WORK HAS BEEN COMPLETED FOR START OF MAINTENANCE.
   D) AT END OF MAINTENANCE/FINAL ACCEPTANCE CONTRACTOR/DEVELOPER WILL BE RELEASED FROM MAINTENANCE ONLY UPON RECEIPT OF WRITTEN NOTIFICATION FROM THE CITY THAT THE PARK AND RECREATION DEPARTMENT IS ASSUMING MAINTENANCE RESPONSIBILITIES.
3. STREET TREES SHALL BE PLANTED PRIOR TO OCCUPANCY.
4. CONTRACTOR/DEVELOPER SHALL MAINTAIN ALL PLANTINGS FOR A MINIMUM PERIOD OF ONE (1) YEAR.
*5. STREET TREE PLANTING SHALL BE AS FOLLOWS:

STREET NAME	BOTANICAL NAME/ COMMON NAME	MIN. SIZE	APPROX. SPACING	NO. REQ.
ALESSANDRO BLVD.	MEXICAN FAN PALM 4' BRN. TRUNK WASHINGTON ROBUSTA		~~50~~ 45'	15
BARTON ROAD	LIQUID AMBER/ STYRACIFLUA	15 GAL.	~~50~~ 45'	11

6. PARK AND RECREATION DEPARTMENT AND PUBLIC WORKS DEPARTMENT PERMITS ARE REQUIRED PRIOR TO COMMENCEMENT OF TREE RELOCATION AND/OR REMOVAL WORK. FOR ALL TREES WITHIN THE ULTIMATE PAVEMENT AREA, BACKFILL OF ALL HOLES IS TO BE INSPECTED BY THE CITY FOR PROPER COMPACTION.
7. ALL STREET TREES TO BE AUTOMATICALLY IRRIGATED.

* NOTE: IN THE INTEREST OF PUBLIC SAFETY AND MAINTENANCE, THE STREET TREE INSPECTOR SHALL HAVE THE AUTHORITY TO REVISE STREET TREE NUMBERS AND LOCATIONS AS SHOWN ON APPROVED PLANS.

STREET SIGN SCHEDULE

SIGN NO.	SIGN TYPE	STREET NAME	BLOCK NO.
1	STREET NAME	BARTON STREET ALESSANDRO BLVD.	7300 900 E.

TRAFFIC SIGN CHART

TYPE	SIZE	DESCRIPTION	QUANTITY
R1	36" x 36"	"STOP" SIGN	5
R10	48" x 16"	"ONE WAY" SIGN (RT.)	2
R34	24" x 24"	"NO U TURN" SIGN	1

CONSTRUCTION NOTES

1. CONSTRUCT 6" CURB AND GUTTER PER STD. DWG. 200 (TYPE I).
2. CONSTRUCT CURB SIDEWALK PER STD. DWG. 325.
3. CONSTRUCT 0.21' A.C. OVER .33' CLASS II CRUSHED AGGREGATE BASE.
4. *OVERLAY ALESSANDRO TO 8' LEFT OF EXIST. E.P. ESTIMATED QUANTITY = 80 TONS SHOWN BY CROSSHATCH.*
5. INSTALL 2" x 4" REDWOOD HEADER.
6. INSTALL STREET TREES TO THE SPECIFICATIONS OF THE PARK AND RECREATION DEPARTMENT.
7. CONSTRUCT WHEELCHAIR RAMP PER STD. DWG. 304.
8. CONSTRUCT CROSS GUTTER PER STD. DWG. 220, W=10', D=1.5".
9. CONSTRUCT 0.46' A.C. OVER 0.50' CLASS II CRUSHED AGGREGATE BASE. PER SR#1437
10. POT HOLE TO FIND EXACT LOCATION OF TELEPHONE LINES BEFORE DIGGING STREET TREE PITS.

PAVING NOTES

THE DEVELOPER SHALL ARRANGE FOR A SOIL TEST TO BE MADE BY A SOILS ENGINEER AFTER THE STREETS HAVE BEEN PREPARED TO ROUGH GRADE AND PRIOR TO CURB AND GUTTER CONSTRUCTION. DEPTH OF BASE MATERIAL AND A.C. PAVING SHALL BE DETERMINED BY THE CITY OF RIVERSIDE DESIGN STANDARDS AND TEST PROCEDURE.

LEGEND

RIGHT-OF-WAY
PROPERTY LINE
TYPE I CURB & GUTTER (6" C.F.)
EXIST 18" STORM DRAIN
INDICATES SHEET LAYOUT

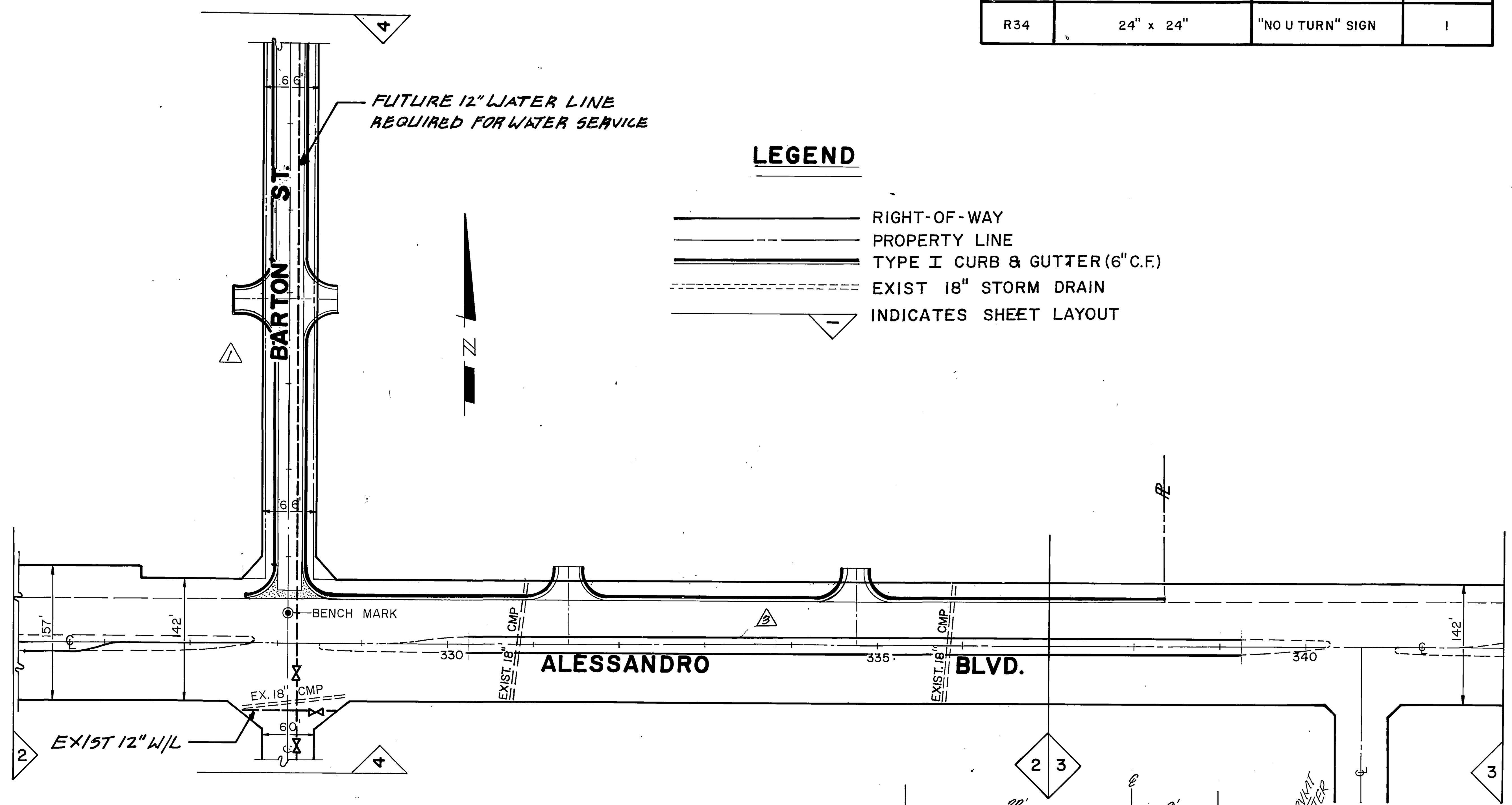

INDEX MAP

SCALE 1"=100'
OCT. 1989

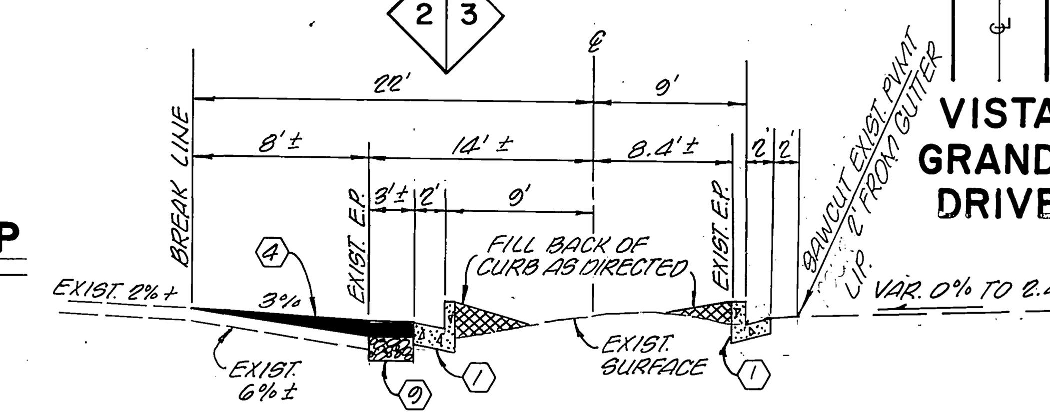

ALESSANDRO MEDIAN DETAIL
N.T.S.

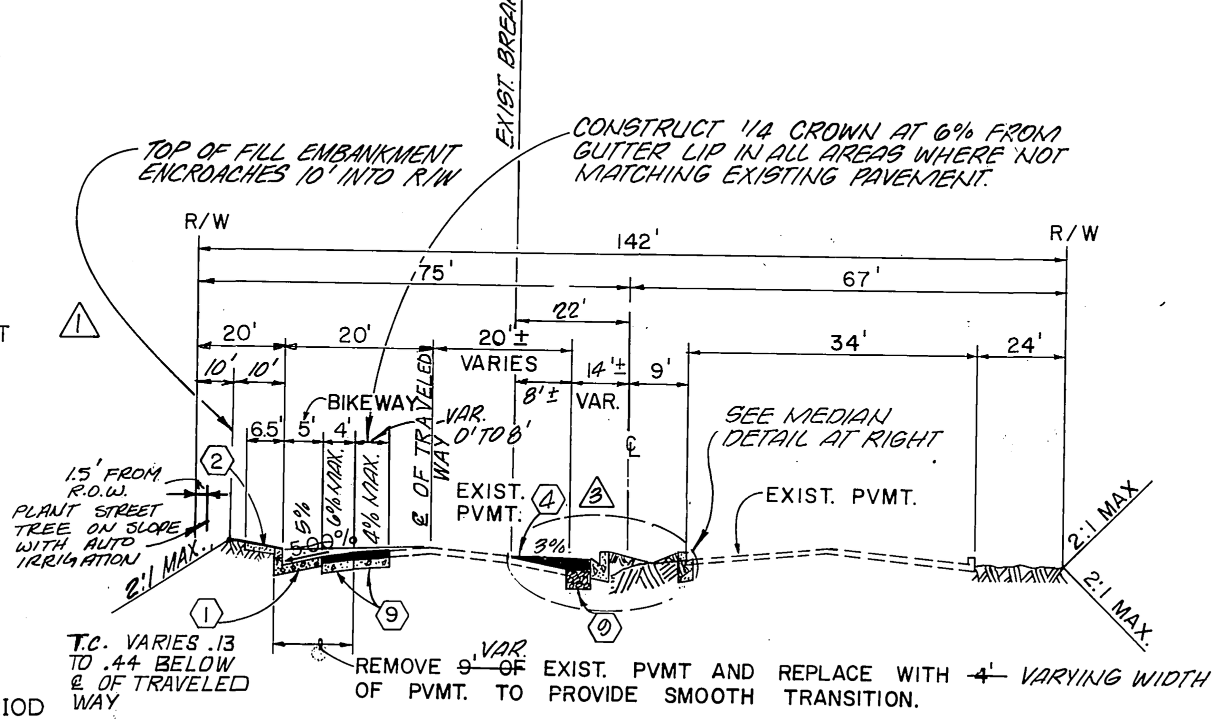

TYPICAL SECTION
ALESSANDRO BLVD.
N.T.S.
T.I.= 11

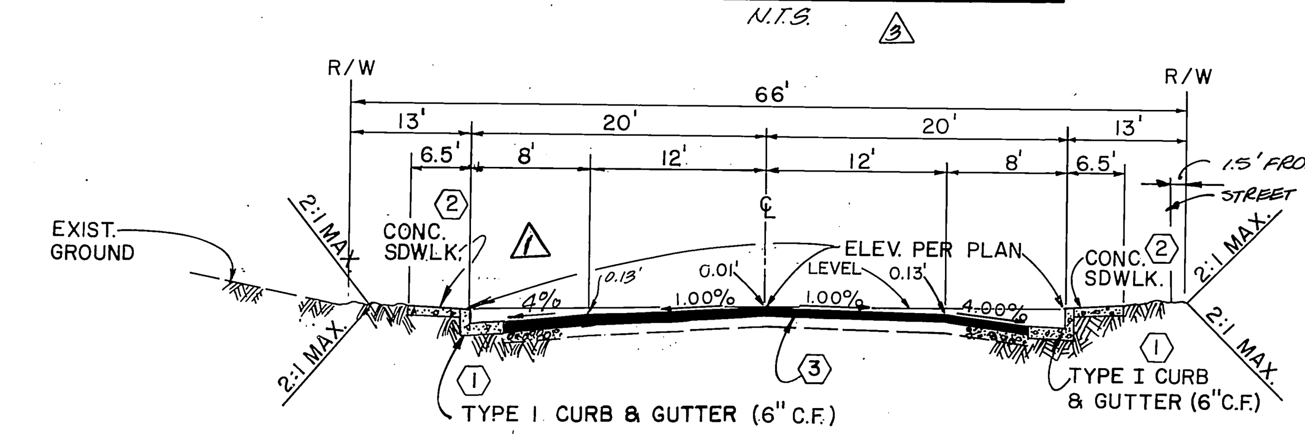

STA. 0+90 TO 6+95
BARTON STREET
N.T.S
T.I.= 7

NOTICE TO CONTRACTOR

1. THE EXISTENCE AND LOCATION OF ANY UNDERGROUND UTILITY PIPES OR STRUCTURES SHOWN ON THESE PLANS ARE OBTAINED BY A SEARCH OF THE AVAILABLE RECORDS. TO THE BEST OF OUR KNOWLEDGE, THERE ARE NO EXISTING UTILITIES EXCEPT AS SHOWN ON THESE PLANS.
2. THE CONTRACTOR IS REQUIRED TO TAKE DUE PRECAUTIONARY MEASURES TO PROTECT THE UTILITY LINES SHOWN AND ANY OTHER LINES NOT OF RECORD OR NOT SHOWN ON THESE PLANS.

DEVELOPER

JOHN DEGENARRO
7177 BROCKTON, SUITE 340
RIVERSIDE, CA. 92506
(714) 787-0494

VICINITY MAP

NOT TO SCALE

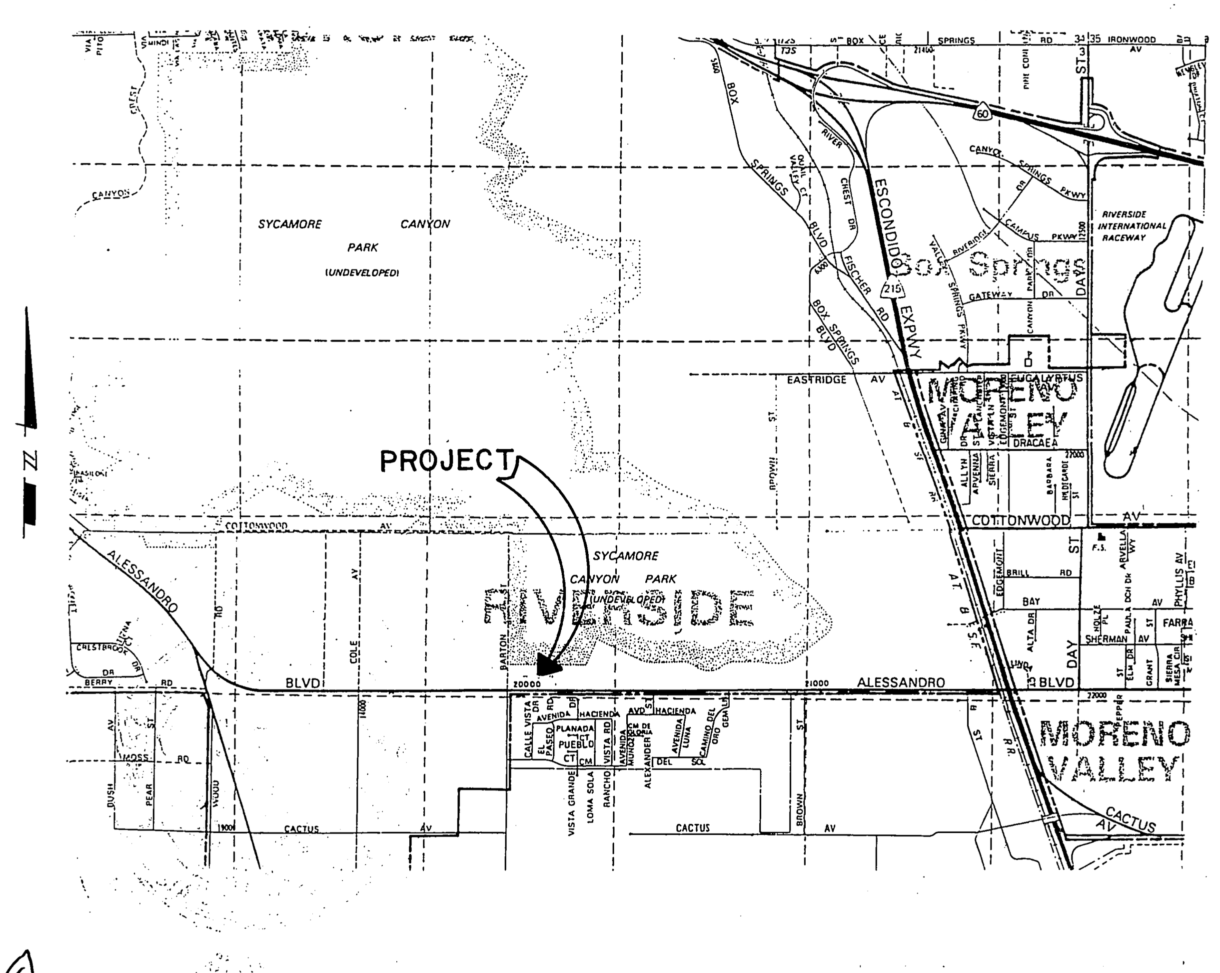

FOUR CORNERS PIPELINE COMPANY
J.C. Walton 2-25-91
APPROVED BY: DATE

CENCOM CABLE TELEVISION CO.
APPROVED BY: 4-2-90 DATE

WESTERN MUNICIPAL WATER DISTRICT
REVIEWED BY WESTERN MUNICIPAL WATER DISTRICT
SHEET 1 THROUGH 4
PRINCIPAL ENGINEER RCE 21643
DATE: 9/19/90

SOUTHERN CALIFORNIA GAS CO.
REVIEWED BY: Robert St. John 4-9-90 DATE

PACIFIC TELEPHONE CO.
APPROVED BY: DATE

BENCH MARK:
P.K. NAIL AND TAG IN CONC. RETAINING WALL SE'LY OF INTERSECTION OF ALESSANDRO BLVD. AND TRAUTWEIN ROAD.
ELEV. 1607.635

REGISTERED PROFESSIONAL ENGINEER GEORGE L. BENTON No 14594 CIVIL STATE OF CALIFORNIA

PREPARED BY
COMMUNITY ENGINEERING SERVICES, INC.
5225 CANYON CREST DR.
BLDG. 300, SUITE 360
RIVERSIDE, CA. 92507
(714) 781-0950

REGISTERED PROFESSIONAL ENGINEER BRIAN G. ESGATE No. 21884 Exp. 9-30-93 CIVIL STATE OF CALIFORNIA

REVISION 1 BY: COMMUNITY ENGINEERING SERVICES, INC

CROSBY MEAD BENTON & ASSOC.
PLANNERS • ENGINEERS • SURVEYORS
29377 RANCHO CALIFORNIA ROAD, SUITE 204
RANCHO CALIFORNIA, CALIFORNIA 92390
APPROVED BY: DATE 12/8/89
EXP. DATE 3/31/93 GEORGE L. BENTON R.C.E. NO. 14594
J.N. 520-1 FOR: JOHN De GENNARO
CITY BUSINESS TAX CERTIFICATE NO. 040660 EXP. DATE 11/30/90

MARK	REVISIONS	APPR.	DATE
1	REVISED TO ADD WEST SIDE OF BARTON STREET DESIGN BY C.E.S. REVISED ALESSANDRO SECTION		5/30/91
2	ADDED STRUCT. SECTION		1/7/91
3	ADDED MEDIAN CURB & GUTTER		12/12/91

DESIGNED BY B.E. DRAWN BY C.S. CHECKED BY M.N.

CITY OF RIVERSIDE
PUBLIC WORKS DEPARTMENT

APPROVED BY	DATE	BY
PRINCIPAL ENGINEER	3/4/91	
PARK DEPARTMENT	2/26/91	
TRAFFIC DIVISION	3-1-91	
CHIEF P. W. ENGINEER	3-5-91	
	3/4/91	

APPROVED BY PUBLIC WORKS DIRECTOR
DATE 3/6/91

STREET IMPROVEMENT PLANS FOR
ALESSANDRO BLVD.
BARTON ST.
R-23-889
HORIZ. SCALE: AS SHOWN

ACCOUNT NO. 520-2
DRAWING NUMBER
R-3144
SHEET 1 OF 4
189

INDEXED 7/9/91

P.C. - 3311-5

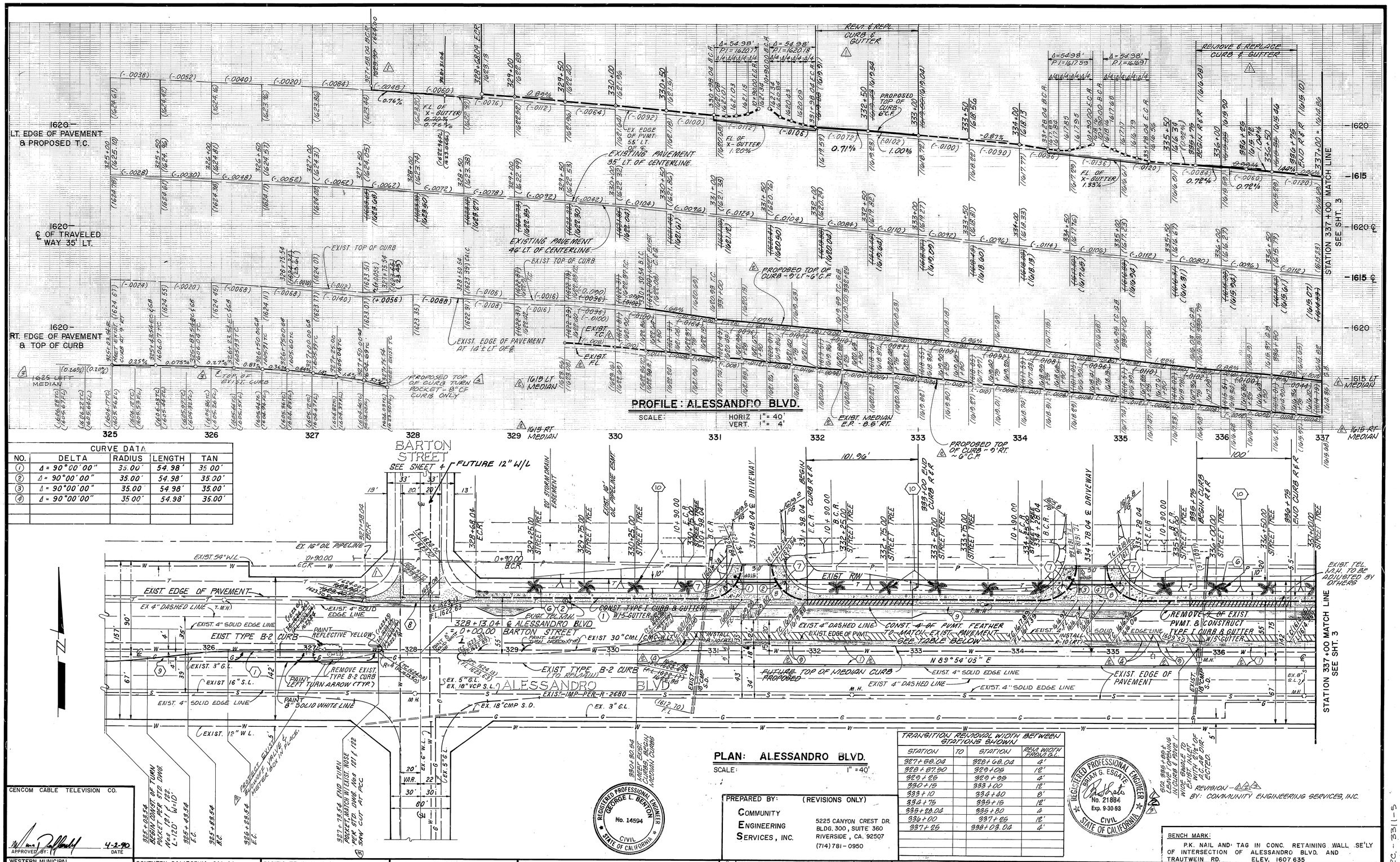

CURVE DATA				
NO.	DELTA	RADIUS	LENGTH	TAN
1	Δ = 90°00'00"	35.00'	54.98'	35.00'
2	Δ = 90°00'00"	35.00'	54.98'	35.00'
3	Δ = 90°00'00"	35.00'	54.98'	35.00'
4	Δ = 90°00'00"	35.00'	54.98'	35.00'

TRANSITION REMOVAL WIDTH BETWEEN STATIONS SHOWN			
STATION	TO	STATION	REM. WIDTH FROM G.L.
327+68.04		328+68.04	4'
328+87.90		329+05	12'
329+25		329+95	4'
330+15		333+00	12'
333+10		334+40	8'
334+75		335+15	12'
335+28.04		335+80	4
336+00		337+25	12'
337+25		338+03.04	4'

PLAN: ALESSANDRO BLVD.
SCALE: 1" = 40'

REVISION - 1 2 3
BY: COMMUNITY ENGINEERING SERVICES, INC.

PREPARED BY: (REVISIONS ONLY)
COMMUNITY ENGINEERING SERVICES, INC.
5225 CANYON CREST DR.
BLDG. 300, SUITE 360
RIVERSIDE, CA. 92507
(714) 781-0950

REGISTERED PROFESSIONAL ENGINEER GEORGE L. BENTON No. 14594 CIVIL STATE OF CALIFORNIA

REGISTERED PROFESSIONAL ENGINEER BRIAN G. ESGATE No. 21884 Exp. 9-30-93 CIVIL STATE OF CALIFORNIA

BENCH MARK:
P.K. NAIL AND TAG IN CONC. RETAINING WALL SE'LY OF INTERSECTION OF ALESSANDRO BLVD. AND TRAUTWEIN RD. ELEV. 1607.635

CENCOM CABLE TELEVISION CO.
APPROVED BY: 4-2-90 DATE

WESTERN MUNICIPAL WATER DISTRICT
REVIEWED BY WESTERN MUNICIPAL WATER DISTRICT
SHEET THROUGH
PRINCIPAL ENGINEER RCE 21643
DATE:

SOUTHERN CALIFORNIA GAS CO.
REVIEWED BY 4-9-90 DATE

PACIFIC TELEPHONE CO.
APPROVED BY: DATE

FOUR CORNERS PIPELINE COMPANY
APPROVED BY: 2-25-91 DATE

CROSBY MEAD BENTON & ASSOC.
PLANNERS • ENGINEERS • SURVEYORS
29377 RANCHO CALIFORNIA ROAD, SUITE 204
RANCHO CALIFORNIA, CALIFORNIA 92390
APPROVED BY: DATE 12/8/89
EXP. DATE 3/31/93 GEORGE L. BENTON R.C.E. NO. 14594
J.N. 520-1 FOR: JOHN DeGENNARO

MARK	REVISIONS	APPR.	DATE
1	REVISED TO ADD BARTON ST. DESIGN BY C.E.S. & REVISED GRADES ON ALESSANDRO - SHOWED REMOVAL & REPLACEMENT LIMITS.	WLL	3/30/91
2	ADDED MEDIAN CURB & GUTTER	WLL	12/12/91
3	ADDED LEFT TURN POCKET PROFILE	WLL	

DESIGNED BY B.E. DRAWN BY C.S. CHECKED BY M.N.

CITY OF RIVERSIDE
PUBLIC WORKS DEPARTMENT

APPROVED BY	DATE	BY
PRINCIPAL ENGINEER	3/4/91	
PARK DEPARTMENT	2-26-91	
TRAFFIC DIVISION		
CHIEF P.W. ENGINEER	3-5-91	
	3/3/91	WLL

APPROVED BY
PUBLIC WORKS DIRECTOR
DATE

STREET IMPROVEMENT PLAN
ALESSANDRO BOULEVARD
STATION 325+00 - 337+00
R-23-889
HORIZ. SCALE: 1" = 40' VERT. SCALE: 1" = 4'

ACCOUNT NO. 520-2
DRAWING NUMBER
R-3144
SHEET 2 OF 4
289

CITY BUSINESS TAX CERTIFICATE NO. 040660 EXP. DATE 11/30/90

INDEXED 7-9-91 4H

P.C. - 3311-5

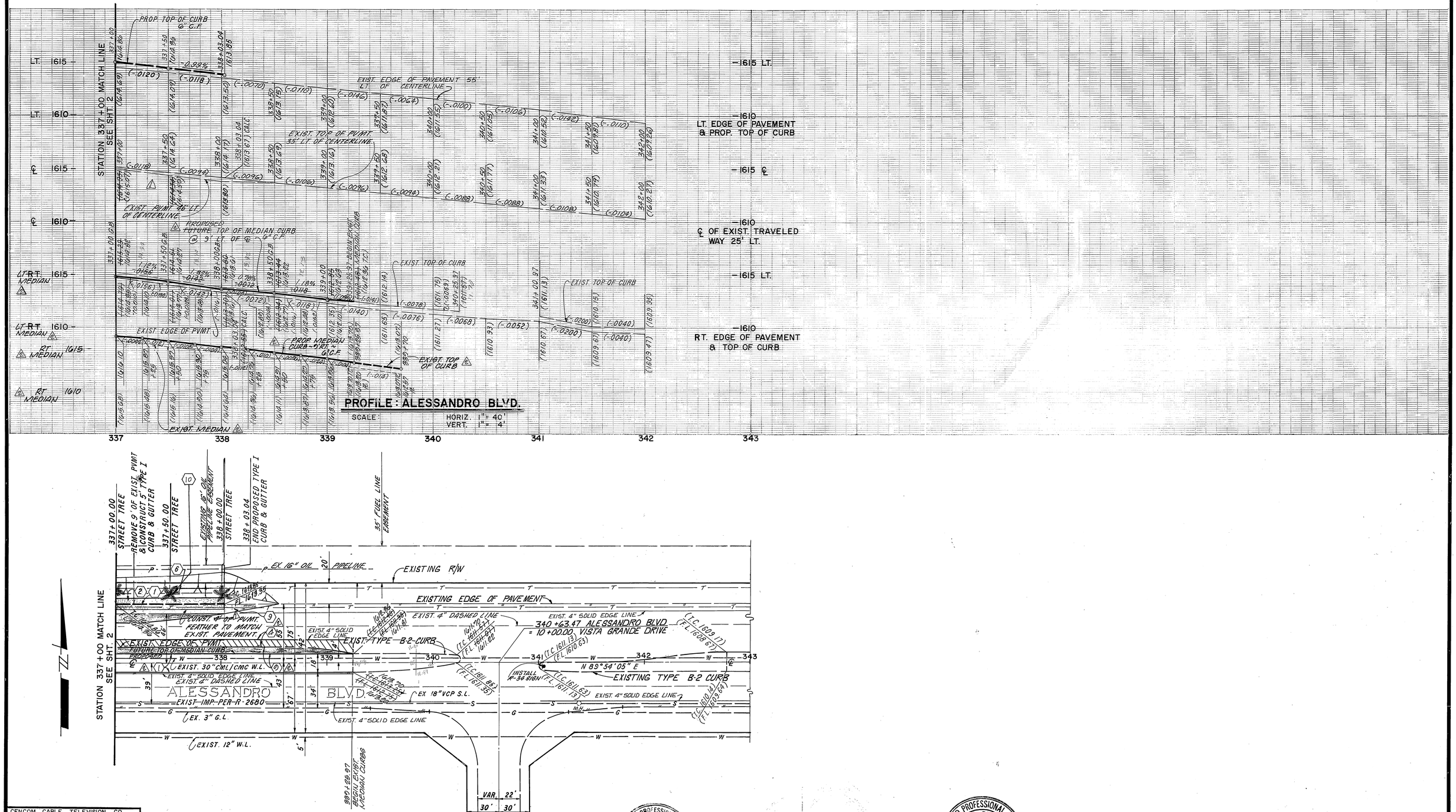

PROFILE: ALESSANDRO BLVD.

SCALE: HORIZ. 1"= 40'
VERT. 1"= 4'

PLAN: ALESSANDRO BLVD.

SCALE: 1" = 40'

CENCOM CABLE TELEVISION CO.
APPROVED BY: 4-2-90 DATE

WESTERN MUNICIPAL WATER DISTRICT
REVIEWED BY WESTERN MUNICIPAL WATER DISTRICT
SHEET ____ THROUGH ____
PRINCIPAL ENGINEER RCE. 21884
DATE:

SOUTHERN CALIFORNIA GAS CO.
REVIEWED BY: 4-9-90 DATE

PACIFIC TELEPHONE CO.
APPROVED BY: DATE

FOUR CORNERS PIPELINE COMPANY
APPROVED BY: 2-25-91 DATE

CROSBY MEAD BENTON & ASSOC.
PLANNERS • ENGINEERS • SURVEYORS
29377 RANCHO CALIFORNIA ROAD, SUITE 204
RANCHO CALIFORNIA, CALIFORNIA 92390
APPROVED BY: DATE 12/8/89
EXP. DATE 3/31/93 GEORGE L. BENTON R.C.E. NO. 14594
J.N. 520-1 FOR: JOHN DeGENNARO

CITY BUSINESS TAX CERTIFICATE NO. 040660 EXP. DATE 11/30/90

REGISTERED PROFESSIONAL ENGINEER GEORGE L. BENTON No. 14594 CIVIL STATE OF CALIFORNIA

PREPARED BY: (REVISIONS ONLY)
COMMUNITY ENGINEERING SERVICES, INC.
5225 CANYON CREST DR. BLDG. 300, SUITE 360
RIVERSIDE, CA. 92507
(714) 781-0950

REGISTERED PROFESSIONAL ENGINEER BRIAN G. ESGATE No. 21884 Exp. 9-30-93 CIVIL STATE OF CALIFORNIA

MARK	REVISIONS	APPR.	DATE
1	REVISED GRADES ON ALESSANDRO - SHOWED RELOCATION & REPLACEMENT LIMITS	WLL	5/21/91
2	ADDED MEDIAN CURBS	WLL	9/12/91

DESIGNED BY: BE DRAWN BY: CG CHECKED BY: M.N.

BENCH MARK:
P.K. NAIL AND TAG IN CONC. RETAINING WALL SE'LY OF INTERSECTION OF ALESSANDRO BLVD. AND TRAUTWEIN RD. ELEV. 1607.635

CITY OF RIVERSIDE
PUBLIC WORKS DEPARTMENT

APPROVED BY	DATE	BY
PRINCIPAL ENGINEER	3/4/91	
PARK DEPARTMENT	2/26/91	
TRAFFIC DIVISION	3/1/91	
CHIEF P. W. ENGINEER	3/19/91	
	3/8/91	

APPROVED BY: PUBLIC WORKS DIRECTOR
DATE 3/6/91

STREET IMPROVEMENT PLAN

ALESSANDRO BOULEVARD
STATION 337+00 - 343+00
R-23-889

ACCOUNT NO. 520-2
DRAWING NUMBER R-3144
SHEET 3 OF 4
389

HORIZ. SCALE: 1"=40' VERT. SCALE: 1"=4'

INDEXED 7/9/91 HH

481-197

PC-3311-5

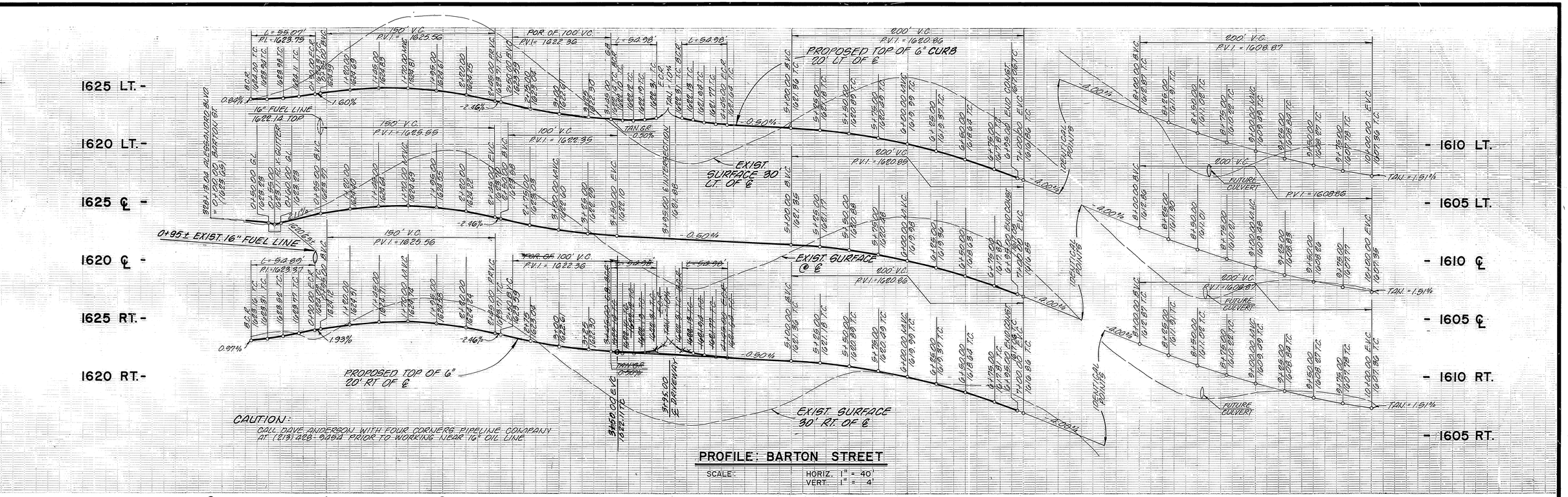

PROFILE: BARTON STREET

SCALE: HORIZ. 1" = 40'
VERT. 1" = 4'

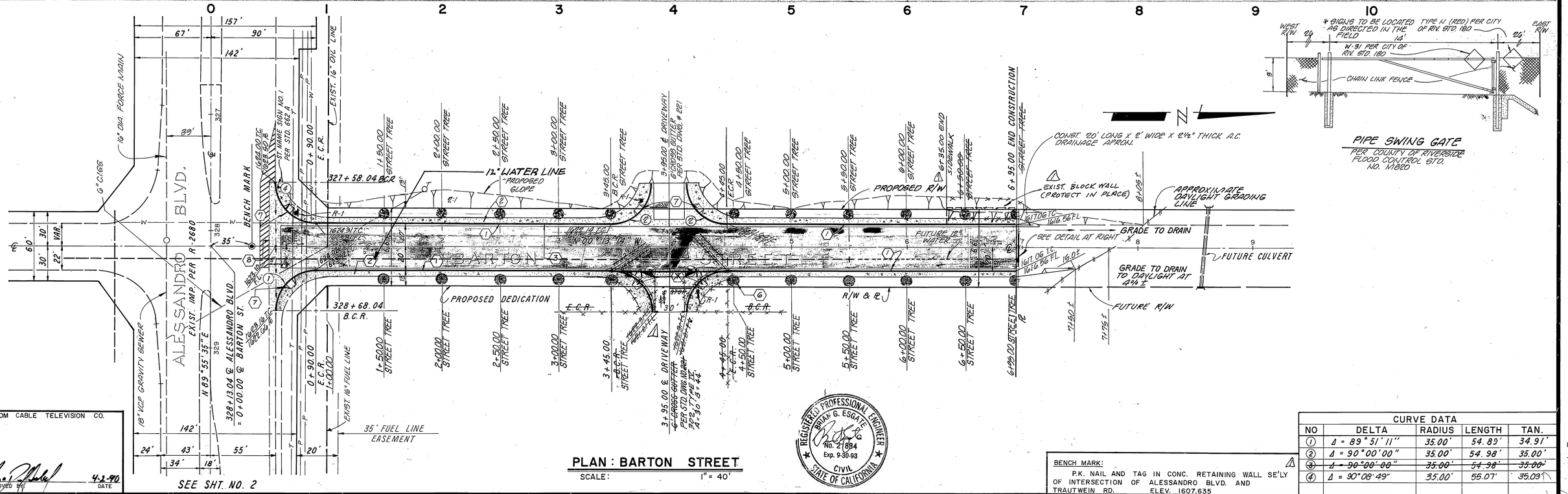

PLAN: BARTON STREET

SCALE: 1" = 40'

* SIGNS TO BE LOCATED TYPE N (RED) PER CITY AS DIRECTED IN THE FIELD OF RIV. STD. 180

PIPE SWING GATE
PER COUNTY OF RIVERSIDE FLOOD CONTROL STD. NO. M880

CURVE DATA				
NO	DELTA	RADIUS	LENGTH	TAN.
①	Δ = 89°51'11"	35.00'	54.89'	34.91'
②	Δ = 90°00'00"	35.00'	54.98'	35.00'
③	~~Δ = 90°00'00"~~	~~35.00'~~	~~54.98~~	~~35.00'~~
④	Δ = 90°08'49"	35.00'	56.07'	35.03'

BENCH MARK:
P.K. NAIL AND TAG IN CONC. RETAINING WALL SE'LY OF INTERSECTION OF ALESSANDRO BLVD. AND TRAUTWEIN RD. ELEV. 1607.635

REGISTERED PROFESSIONAL ENGINEER BRIAN G. ESGATE No. 21884 Exp. 9-30-93 CIVIL STATE OF CALIFORNIA

CENCOM CABLE TELEVISION CO.
APPROVED BY: 4-2-90 DATE

WESTERN MUNICIPAL WATER DISTRICT
REVIEWED BY WESTERN MUNICIPAL WATER DISTRICT
SHEET ~~THROUGH~~
PRINCIPAL ENGINEER RCE 21643
DATE:

SOUTHERN CALIFORNIA GAS CO.
REVIEWED BY: 4-9-90 DATE

PACIFIC TELEPHONE CO.
APPROVED BY: 4/3/90 DATE

FOUR CORNERS PIPELINE COMPANY
APPROVED BY: J.C. Walton 2-25-91 DATE

PREPARED BY:
COMMUNITY ENGINEERING SERVICES, INC.
5225 CANYON CREST DR
BLDG. 200, SUITE 360
RIVERSIDE, CA. 92507
(714) 781-0950
APPROVED BY: Brian Esgate DATE 4-18-91

MARK	REVISIONS	APPR.	DATE
1	REVISED EAST D/W, DELETED SW'K TREE	MW	11/1/91
2	WEST SIDE 6+35 TO 6+95 (ex 7/19/91)		

DESIGNED BY B.E. DRAWN BY C.G. CHECKED BY M.N.

CITY OF RIVERSIDE
PUBLIC WORKS DEPARTMENT

APPROVED BY	DATE	BY
PRINCIPAL ENGINEER	3/4/91	BE
PARK DEPARTMENT	2-26-91	MM
TRAFFIC DIVISION	3-1-91	MM
CHIEF P. W. ENGINEER	7-3-91	MM
	7/3/91	KEC

APPROVED BY: PUBLIC WORKS DIRECTOR
DATE 7/4/91

STREET IMPROVEMENT PLAN

BARTON STREET
STATION 0+00 - 10+00
R-23-889

HORIZ. SCALE: 1" = 40' VERT. SCALE: 1" = 4'

ACCOUNT NO. 520-2
DRAWING NUMBER
R-3144
SHEET 4 OF 4
489

PC-3311-5

INDEXED 7/9/91 GPT