GENERAL NOTES

1. IT SHALL BE THE RESPONSIBILITY OF THE CONTRACTOR TO CLEAR THE RIGHT-OF-WAY, IN ACCORDANCE WITH THE PROVISIONS OF LAW AS IT AFFECTS EACH UTILITY INCLUDING IRRIGATION LINES AND APPURTENANCES AND AT NO COST TO THE CITY.
2. CONSTRUCTION SHALL BE IN ACCORDANCE WITH THE CITY OF RIVERSIDE DEPARTMENT OF PUBLIC WORKS. STANDARD DRAWINGS, STANDARD DRAWING No.10 AND THE STANDARD SPECIFICATIONS FOR PUBLIC WORKS CONSTRUCTION, CURRENT EDITION.
3. THE PRIVATE ENGINEER SIGNING THESE PLANS IS RESPONSIBLE FOR ASSURING THE ACCURACY AND ACCEPTABILITY OF THE WORK HEREON. IN THE EVENT OF DISCREPANCIES ARISING DURING CONSTRUCTION, THE PRIVATE ENGINEER SHALL BE RESPONSIBLE FOR DETERMINING AN ACCEPTABLE SOLUTION AND REVISING THE PLANS FOR APPROVAL BY THE CITY.
4. QUANTITIES SHOWN ARE FOR INFORMATION ONLY AND THE CITY OF RIVERSIDE IS NOT RESPONSIBLE FOR THEIR ACCURACY.
5. THE DEVELOPER SHALL BE RESPONSIBLE FOR PRESERVING OR RE-ESTABLISHING AND REFERENCING SURVEY MONUMENTS DESTROYED, DISTURBED OR BURIED AS A RESULT OF CONSTRUCTION SHOWN HEREON.
6. SEE " STREET LIGHTING PLANS " FOR QUANTITY AND LOCATION OF REQUIRED STREET LIGHTS.
7. ALL FLAGGED ELEVATION SHALL BE STAKED IN THE FIELD BY THE PRIVATE ENGINEER.
8. TRIM EDGE OF EXISTING PAVEMENT WHERE NEW PAVEMENT JOINS TO A SMOOTH , STRAIGHT LINE . CONSTRUCT MATCH-UP PAVING AS SHOWN ON PLAN AND OVERLAY PAVING AS DIRECTED IN THE FIELD TO PRODUCE A SMOOTH SECTION.
9. CONSTRUCT DRIVEWAY APPROACHES PER STANDARD DRAWING 302, EXACT SIZE AND LOCATION TO BE AS SHOWN.
10. ON ALL AREAS WITHIN PUBLIC RIGHT OF WAY WHERE THE FILL IS ONE (1) FOOT OR GREATER . A LETTER WILL BE REQUIRED FROM THE SOILS ENGINEER , CERTIFYING THE COMPACTION OF THE FILL BELOW SUBGRADE. PRIOR TO ISSUANCE OF THE CONSTRUCTION PERMIT/CUT SHEETS.
11. ANY TRAFFIC CONTROL STRIPING OBLITERATED AND/OR BADLY WORN DURING CONSTRUCTION SHALL BE RESTORED BY THE CONTRACTOR WITHIN FIVE DAYS AFTER NOTIFICATION FROM THE CITY INSPECTORS.
12. THE CONTRACTOR SHALL COORDINATE TRENCHING FOR CABLE TELEVISION WITH OTHER TRENCHING WITHIN THE SUBDIVISION.
13. FINAL STRIPING FOR TRAFFIC CONTROL AND/OR PAVEMENT MAKING TO BE THE RESPONSIBILITY OF THE DEVELOPER.
14. THE CONTRACTOR SHALL CALL IN A LOCATION REQUEST TO UNDERGROUND SERVICE ALERT (USA), TELE. # 1-800-422-4133, TWO WORKING DAYS BEFORE DIGGING, NO CONSTRUCTION PERMIT WILL BE ISSUED BY THE PUBLIC WORKS DEPARTMENT INVOLVING EXCAVATION FOR UNDERGROUND FACILITIES UNLESS THE APPLICANT HAS BEEN PROVIDED AN INQUIRY IDENTIFICATION NUMBER BY THE U.S.A.
15. THE SEWER CONTRACTOR SHALL ADJUST MANHOLES TO FINAL GRADE AFTER PAVING IS COMPLETED.
16. IN PAVEMENT OVERLAY AREAS, DISTRESSED EXISTING PAVEMENT SHALL BE REMOVED AND REPLACED AS DIRECTED BY THE INSPECTOR PRIOR TO OVERLAYING WITH A.C. PAVING.
17. DEVELOPER TO GIVE CITY WATER DIVISION FIVE (5) WORKING DAYS WRITTEN NOTICE PRIOR TO START OF CONSTRUCTION AND TO ALLOW CITY TEN (10) WORKING DAYS FOR COMPLETION OF WORK . (714) 351 - 6150

CONSTRUCTION NOTES & QUANTITY ESTIMATE.

1.	SAWCUT AND REMOVE EXISTING PAVEMENT & REPLACE	10,052 S.F.
2.	CONST. CURB SIDEWALK PER CITY STD. 325	3408 S.F.
3.	CONST. WEELCHAIR RAMP PER CITY STD. 304	1 EA.
4.	CONST. CROSS GUTTER PER CITY STD. 220 W = 6'	500 s.f.
5.	CONST. 6" CURB & GUTTER PER CITY STD. 200, TYPE I	478 L.F.
6.	POWER POLE TO BE RELOCATED BY OTHERS.	2 EA.
7.	CONST. DRIVEWAY APPROACHES PER CITY STD. 302 A & B SHOWN	6 EA.
8.	TRANSITION TO EXISTING	500 S.F.
9.	INSTALL 0.33 AC OVER COMPACTED NATIVE SOIL BASE PER S.R# 1439 R= 49	5551 S.F.
10.	PLANT STREET TREES TO SPECIFICATIONS OF THE PARK & REC. DEPARTMENT.	
11.	INSTALL STOP SIGN PER CITY STD. 662A.	1. EA.
12.	INSTALL STREET NAME PER CITY STD. 622A.	1. EA.
13.	EXIST. WATER METER TO BE RELOCATED BY CITY FORCES.	4 EA.
14.	CONST. UNDER S/W DRAIN PER CITY STD. 411	2 EA. ⚠1

TRACT # 22239

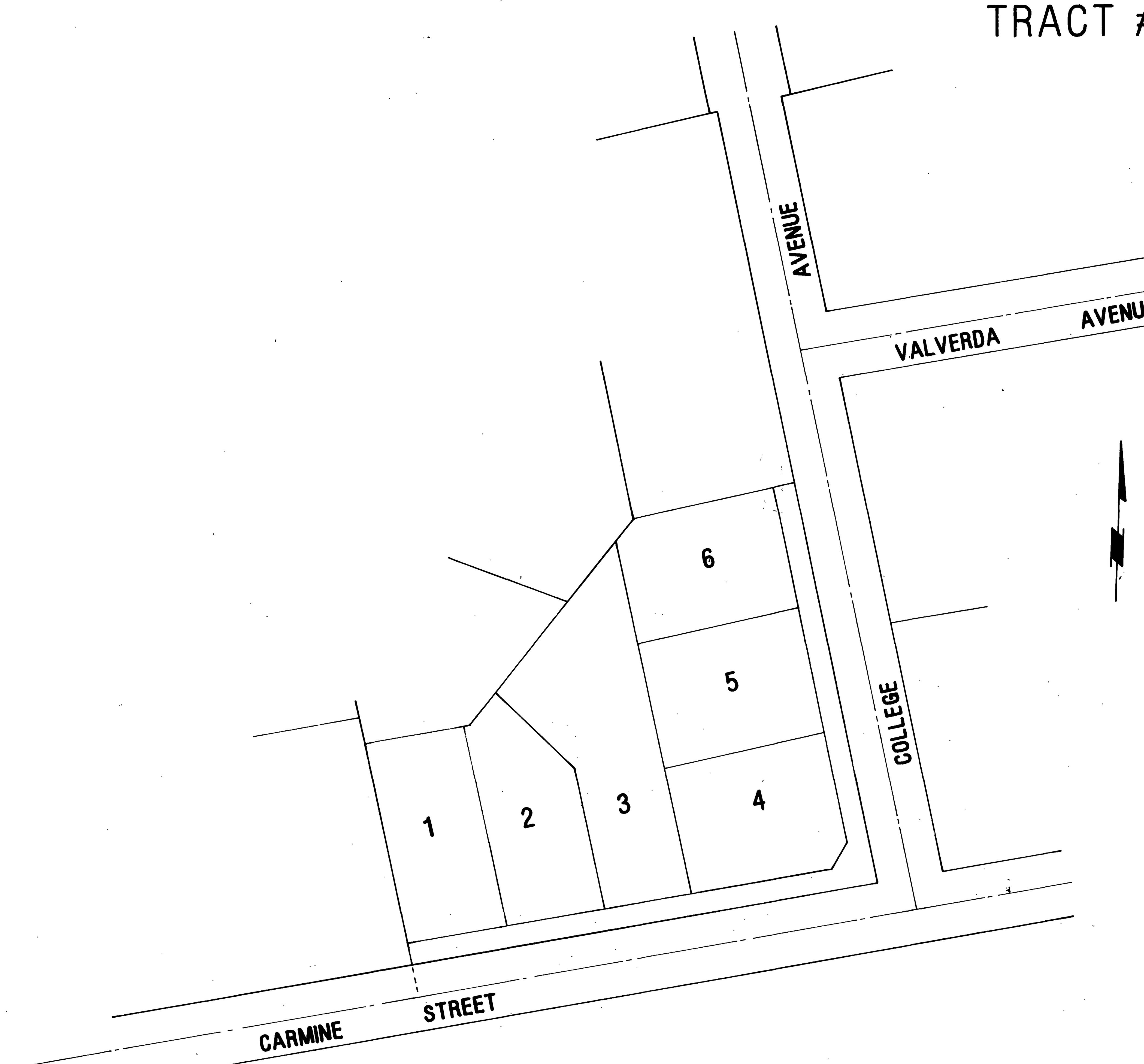

INDEX MAP
SCALE : 1" = 50'

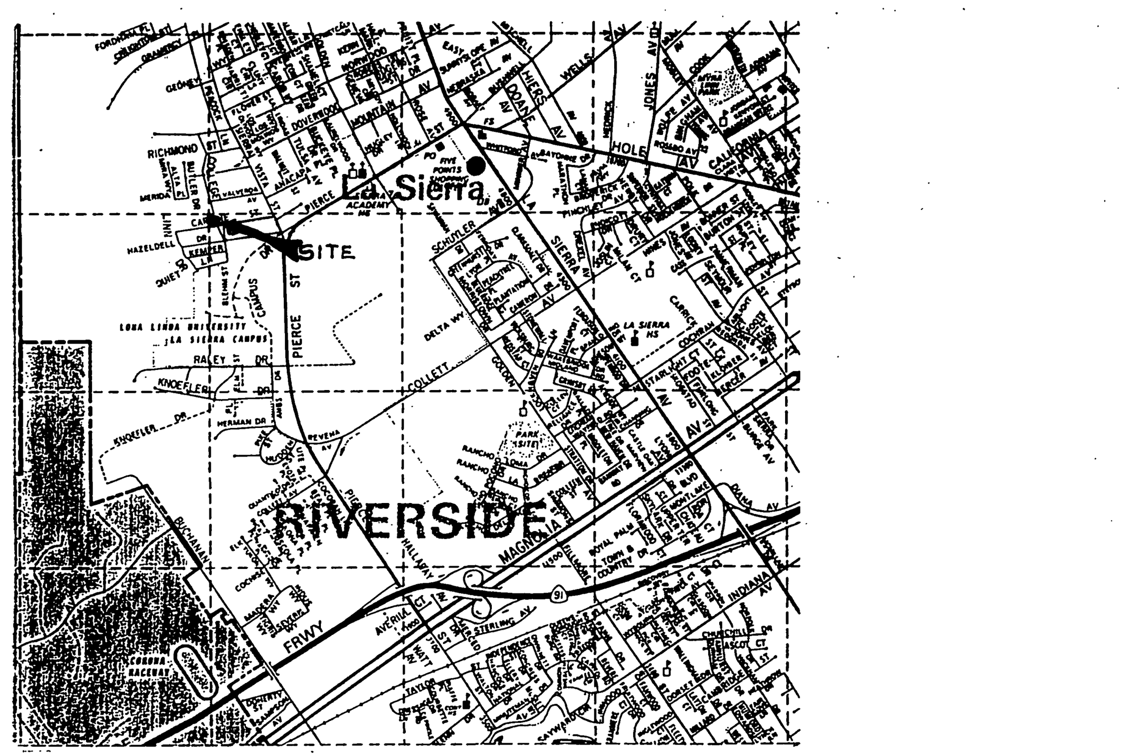

VICINITY MAP (N.T.S)

GENERAL NOTES FOR STREET TREE PLANTING AND RELOCATION

1. All related work shall conform to the City of Riverside Park and Recreation Department Standards and City of Riverside Street Tree policies.
2. When calling for inspections contact the Street Tree Inspector a minimum of 48 hours in advance at (714) 351-6126 to schedule an inspection. A Field Notice will be issued as written approval for each stage of inspection. A verbal approval will not be acceptable. Inspections are required:
   a. After completion of final grading of the lots and when all utility services and sewer lateral have been marked, but prior to digging plant pits, all final street tree locations are to be spotted in the field by the street tree inspector;
   b. While digging plant pits and planting/relocating trees;
   c. After planting and all other indicated or specified work has been completed, for start of maintenance;
   d. At end of the maintenance period, the contractor/developer shall call the Street Tree Inspector at (714) 351-6126 for a final acceptance inspection in order to be released from maintenance. Developers bonds will not be released until after receipt of written notification from the City that the trees pass final inspection and the Park and Recreation department is assuming maintenance responsibilities;
3. ALL STREET TREES ARE TO BE PLANTED PRIOR TO OCCUPANCY.
4. The Developer shall be responsible to acceptably maintain all plantings for a minimum period of one (1) year.
5. Street tree planting shall be as follows:

	Street Name	Botanical Name/Common Name	Min. Size	Approx. Spacing	No. Required
a.	CARMINE	LAGERSTROEMIA INDICA / CRAPE MYRTLE	15gal	45'	5
b.	COLLEGE	LAGERSTROEMIA INDICA / CRAPE MYRTLE	15gal	45'	3
c.					
d.					
e.					
f.					

6. Both a street tree Relocation/Removal permit as issued by the Park and Recreation Department and a Street Opening permit as issued by the Public Works Department are required prior to commencement of tree relocation and/or removal work. For all existing trees within what will ultimately be the Public Right-of-Way pavement area, backfill of all holes must be inspected by the Public Works Inspector for proper compaction.
7. All Street Trees must be automatically irrigated, except where adjacent to single family or duplex residential uses.

*NOTE: In the interest of public safety and maintenance the Street Tree Inspector shall have the authority to revise the street tree quantities and locations shown on approved plans based upon field conditions found at the time of installation of the trees.

Revised: October 23, 1989 422-3 0170c(3)/n - 10/23/89

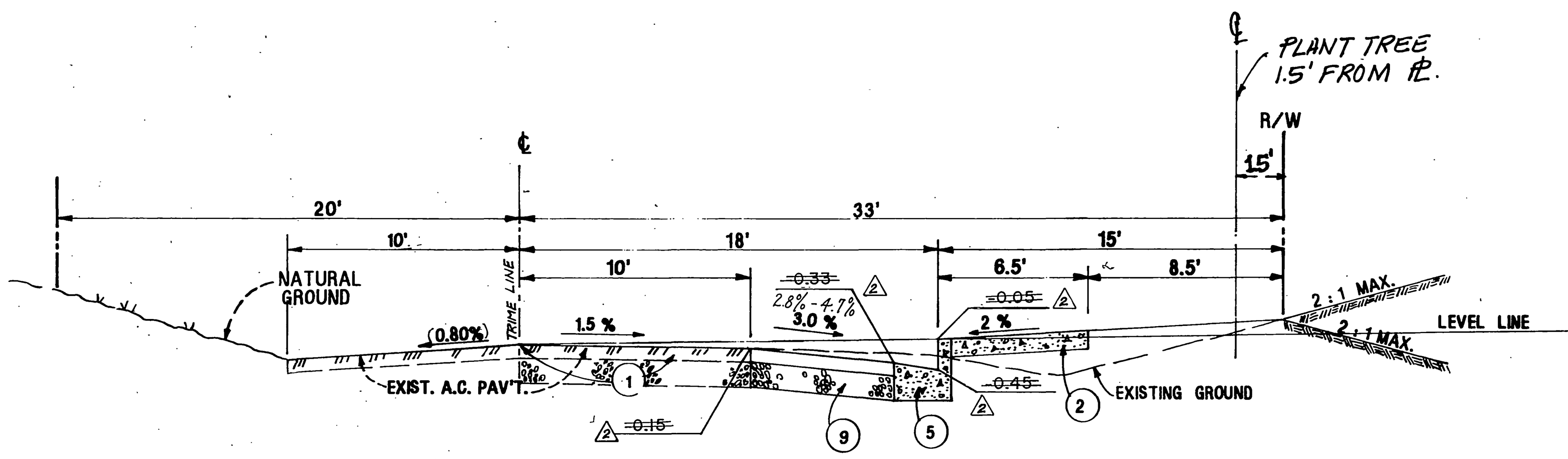

TI = 5'
TYPICAL SECTION - CARMINE STREET & COLLEGE AVENUE (N.T.S.)

LEGEND :

- EXISTING GROUND
- ⚠2 NEW AC PAVEMENT
- REMOVE & REPLACE

* NOTE: REVISION ON SHEET 3 APPLIES FOR CHANGES WEST OF COLLEGE AVENUE CENTERLINE ONLY.

REVISION APPROVED BY: * ⚠1
(SHT 1 & 3)
JEFFREY D. SIMS
R.C.E. NO. 46212 EXPIRES: 12-31-94

J.F.DAVIDSON ASSOCIATES, INC.
-CIVIL ENGINEERS - SURVEYORS - PLANNERS-
3880 LEMON ST. RIVERSIDE CA 92501 (909) 686-0844 FAX 909-686-5854 | 27349 JEFFERSON ST. TEMECULA, CA 92390 (909) 676-7710 FAX 909-699-1981 | 77-564 COUNTRY CLUB DR. PALM DESERT CA 92260 (619) 360-3780 FAX 619-360-3789

REGISTERED PROFESSIONAL ENGINEER JEFFREY D. SIMS No. 46212 12/31/94 CIVIL STATE OF CALIFORNIA

Mohammad Mehdi 6-30-92

CALIFORNIA COUNCIL OF CIVIL ENGINEER & LAND SURVEYORS

CONSTRUCTION CONTRACTOR AGREES THAT IN ACCORDANCE WITH GENERALL ACCEPTED CONSTRUCTION PRACTICES, CONSTRUCTION CONTRACTOR WILL BE REQUIRED TO ASSUME SOLE AND COMPLETE RESPONSIBLITY FOR JOB SITE CONDITIONS DURING THE COURSE OF CONTRUCTION OF THE PROJECT, INCLUDING SAFETY OF ALL PERSONS AND PROPERTY; THAT THIS REQUIREMENT SHALL BE MADE TO APPLY CONTINUOUSLY AND NOT LIMITED TO NORMAL WORKING HOURS AND CONSTRUCTION CONTRACTOR FURTHER AGREES TO DEFEND, INDEMNIFY AND HOLD DESIGN PROFESSIONAL HARMLESS FROM ANY AND ALL LIABILITY, REAL OR ALLEGED, IN CONNCECTION WITH THE PERFORMANCE OF WORK ON THIS PROJECT, EXCEPTING LIABLITY ARISING FROM THE SOLE NEGLIGENCE OF DESIGN PROFESSIONAL.

CENCOM CABLE TV.
BY: [signature]
DATE: 8-12-90

CITY BUSINESS TAX CERTIFICATE N° : 29004 EXP. DATE : AUGUST 13, 1991

AS BUILT 3/1/95 RM

SO. CALIFORNIA GAS COMPANY.	PACIFIC BELL	CITY OF RIVERSIDE ELECT. DEPT.	CITY OF RIVERSIDE WATER DEPT.
BY: D. Chambers	BY:	BY: Wm Whitten	BY: [signature]
DATE: 8/20/90	DATE:	DATE: 8/22/90	DATE: 2-1-91

Underground Service Alert — Call: TOLL FREE 1 - 800 422 - 4133 — TWO WORKING DAYS BEFORE YOU DIG

BENCH MARK
F2-B FD.CONC.MON. WITH NAIL CAPPED @ intersection of SIERRA VISTA AVE. AND NORWOOD AVE. EL. 786.734

F.C.ELAHL ASSOCIATES INC.
7250 MAGNOLIA AVENUE
RIVERSIDE, CA 92504
TEL : (714) 785 - 1100
FAX : (714) 785 - 1197

MARK	REVISIONS	APPR.	DATE
⚠3	"AS-BUILT" PLAN FEED	MV	12/14/94
⚠2	REVISE TAPER & EP	MV	7/14/94
⚠1	ADDED CONST. NOTE 3/15/94 FEED	MV	5/4/94

DESIGNED BY M.Z. DRAWN BY J.Y.C. CHECKED BY M.Z.

CITY OF RIVERSIDE
PUBLIC WORKS DEPARTMENT

APPROVED BY	DATE	BY
PRINCIPAL ENGINEER	4/10/91	
PARK DEPARTMENT	2-7-91	
TRAFFIC DIVISION	4-4-91	
CHIEF P.W. ENGINEER	4-17-91	
	4/16/91	

APPROVED BY: PUBLIC WORKS DIRECTOR
DATE: 4/18/91

STREET IMPROVEMENT PLANS
TRACT 22239
N.W CORNER COLLEGE AVE & CARMINE STREET
SCALE: AS NOTED

ACCOUNT N°.
R - 3183
SHEET 1 OF 3

PC - 3158 - S

INDEXED 4-21-93 GH

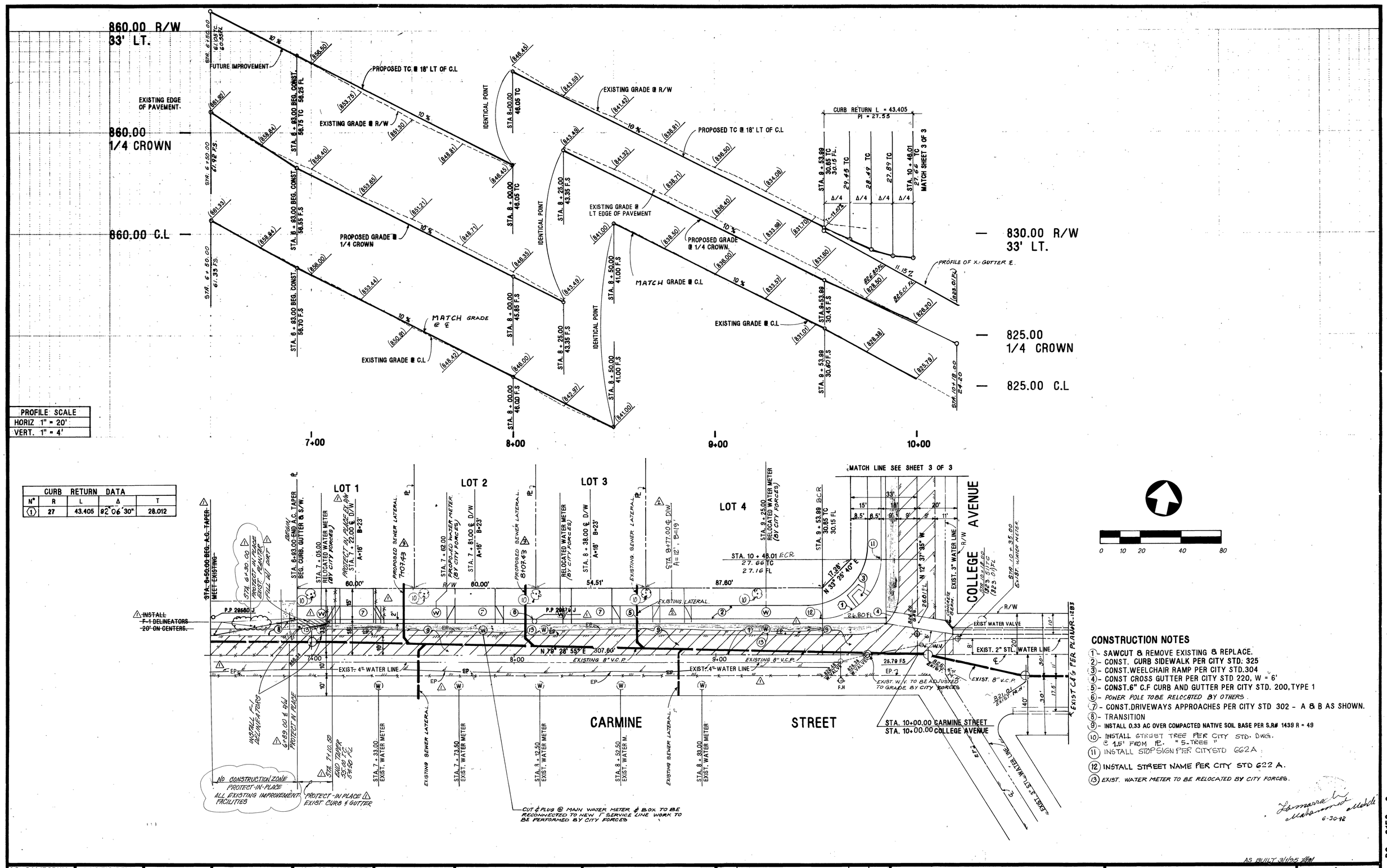

CURB RETURN DATA				
N°	R	L	Δ	T
1	27	43.405	92°06'30"	28.012

CONSTRUCTION NOTES

1. SAWCUT & REMOVE EXISTING & REPLACE.
2. CONST. CURB SIDEWALK PER CITY STD. 325
3. CONST. WEELCHAIR RAMP PER CITY STD. 304
4. CONST CROSS GUTTER PER CITY STD 220, W = 6'
5. CONST. 6" C.F CURB AND GUTTER PER CITY STD. 200, TYPE 1
6. POWER POLE TO BE RELOCATED BY OTHERS.
7. CONST. DRIVEWAYS APPROACHES PER CITY STD 302 - A & B AS SHOWN.
8. TRANSITION
9. INSTALL 0.33 AC OVER COMPACTED NATIVE SOIL BASE PER S.R# 1439 R = 49
10. INSTALL STREET TREE PER CITY STD. DWG. @ 1.5' FROM PL. "5-TREE"
11. INSTALL STOP SIGN PER CITY STD 662A
12. INSTALL STREET NAME PER CITY STD 622 A.
13. EXIST. WATER METER TO BE RELOCATED BY CITY FORCES.

Lamarra Mahammed Mehdi 6-30-92

AS BUILT 3/1/95 [illegible]

PC - 3158 - S

SO. CALIFORNIA GAS COMPANY	PACIFIC BELL	CENCOM CABLE TV.	CITY OF RIVERSIDE ELECT. DEPT.	CITY OF RIVERSIDE WATER DEPT.
BY: [signature]	BY:	BY: [signature]	BY: [signature]	BY: [signature]
DATE: 8/20/90	DATE:	DATE: 8-13-90	DATE: 5/22/90	DATE: 2-1-91

Underground Service Alert — Call: TOLL FREE 1 - 800 422 - 4133 — TWO WORKING DAYS BEFORE YOU DIG

BENCH MARK

F2-B FD.CONC.MON. WITH NAIL CAPPED @ INTERSECTION OF SIERRA VISTA AVE. AND NORWOOD AVE. EL.786.734

F.C.ELAHL ASSOCIATES INC.
7250 MAGNOLIA AVENUE
RIVERSIDE, CA 92504
TEL : (714) 785 - 1100
FAX : (714) 785 - 1197

MARK	REVISIONS	APPR.	DATE
3	"AS-BUILT" SEWER LATERAL [illegible]	[illegible]	12/14/94
2	ADDED D/W APPROACH	[illegible]	3/24/94
1	REVISED TAPER & E.P.	[illegible]	7/16/94

DESIGNED BY M.Z. DRAWN BY J.Y.C. CHECKED BY F.C.E.

CITY OF RIVERSIDE
PUBLIC WORKS DEPARTMENT

APPROVED BY	DATE	BY
PRINCIPAL ENGINEER	4/13/91	[illegible]
PARK DEPARTMENT	2-7-91	[illegible]
TRAFFIC DIVISION	4-4-91	[illegible]
CHIEF P.W. ENGINEER	4/17/91	[illegible]
	4/16/91	[illegible]

APPROVED BY: [signature] PUBLIC WORKS DIRECTOR DATE: 4/18/94

STREET IMPROVEMENT PLANS
STA. 6+93.00 TO 10+00.00 CARMINE STREET
STA. 12+66.50 TO 10+00.00 COLLEGE AVENUE
TRACT 222 39
HORIZ. SCALE: 1" = 20' VERT. SCALE: 1" = 4'

ACCOUNT N°. R - 3183
SHEET 2 OF 3

INDEXED 4-21-93 [illegible]

RIVERSIDE BLUEPRINT RIVERSIDE, CALIF.

828.00 R.W

828.00 E.P

828.00 C.L

- 828 R/W

- 828 E.P

- 828 ℄

CURB RETURN L=43.405 R=27.55

30.65 TC, 27.85 TC, 28.49 TC, 27.89 TC, Δ/4

T=41.02

STA. 10+48.01 C.C.R. 27.66 TC, 27.16 FL

STA. 9+53.99 BCR 30.65 TC 30.15 FL

S = 0.4%

STA. 10+82.00 B.V.C. 27.16 F.S

STA. 11+40.00 27.78 TC

STA. 11+80.00 TC 27.22

STA 11+95.19 & STD DWG 411 27.13 TC 26.63 FL

EXISTING GRADE @ R/W

PROPOSED TC @ 18' L.T.

S = 1.63%

100' V.C V.P.I. = 28.04

STA 12+51.50 26.22 TC TOP OF CURB & GUTTER.

STA. 12+66.50 25.72 F.S END OF CONST.

FUTURE TC @ 18° LT.

STA. 10+80.00 B.V.C. 27.16 F.S

STA. 11+40.00 27.47 F.S

STA. 11+80.00 27.02 F.S

STA 11+91.35 & STD. 411 27.10 TC 26.60 FL

EXISTING GRADE @ E.P.

S = 1.37%

S = 1.63%

PROPOSED GRADE @ 1/4 CROWN.

100'VC VPI = 827.84

FUTURE GRADE @ 1/4 CROWN.

EXISTING GRADE @ C.L

STA. 10+80.00 B.V.C. 26.77 F.S

STA. 11+40.00 27.19 F.S

STA. 11+80.00 27.17 F.S

EXISTING GRADE @ C.L

S = 2.40%

PROPOSED GRADE @ C.L

S = 1.63%

100' V.C V.P.I. = 827.89

STA. 12+66.50 25.81 F.S END OF CONST.

FUTURE GRADE @ ℄

℄ OF COLLEGE AVE. & ℄ CARMINE

10+00 11+00 12+00 13+00

PROFILE SCALE:
HORIZ. = 1" = 20'
VERT. = 1" = 2'

0 10 20 40 60

SCALE : 1" = 20'

STREET

CARMINE

COLLEGE AVENUE

LOT 4 LOT 5 LOT 6

STA. 10+48.01 E.C.R. 27.66 TC 27.16 FL

STA. 9+53.99 BCR 30.65 TC 30.15 FL

N 33° 25' 40" E 17.28'

STA 10+82.00 ℄ D/W A = 16' B = 23'

STA 11+54.00 ℄ D/W A = 16' B = 23'

STA 12+19.00 ℄ D/W A = 16' B = 23'

STA. 11+ 35.00 PROPOSED WATER METER (BY CITY FORCES)

STA. 12 + 11.00 RELOCATED WATER METER (BY CITY FORCES)

PROP. CONC. SWALE (SEE ON-SITE GRADING PLAN)

STA 12+51.50 END CURB & GUTTER & S/W BEGIN A.C. TAPER

STA. 12+66.50 END CURB & GUTTER & S/W END A.C. TAPER

PROTECT-IN-PLACE EXIST. TREE

STA 12+78.50 END A.C. TAPER MATCH EXISTING

STA. 13+00.00 END A.C. TAPER MEET EXISTING

END IMPROVEMENT.

P.P #31149

BERM

TAPER

GRADE TO DRAIN

EXIST. E.P.

PROTECT-IN-PLACE EXIST. FENCE

STA. 10+00.00 COLLEGE AVE.
STA. 10+00.00 CARMINE STREET

EXIST. 4" W.L.

EXIST. W.M.

EXIST. W.V.

EXIST. 8" W.L.

EXIST. 8" W.M.

EXIST. 8" W.V.

EXIST. 12" W.L.

EXIST. 12" W.M.

EXIST. 12" W.V.

EXIST. 3" STL. WATER LINE

EXIST. 2" STL. WATER LINE

EXIST. WATER VALVE

EXIST. WATER METER

EXIST. E.P.

EXIST. C.B.

EXIST. MAN HOLE

EXIST. POWER POLE

EXIST. TREE

EXIST. CURB & GUTTER PER PLAN # R-1283

CONCRETE BERM

STA. 11+35.00 REMOVAL LIMIT

PROTECT IN PLACE EXISTING WALL

STA 11+95.19 STD. DWG 411 27.13 TC, 26.63 FL

STA 11+97.35 STD. DWG 411 27.10 TC, 26.60 FL

STA. 12+32.00 EXIST. WATER METER

STA. 12+92.00 EXIST. WATER METER

N 12° 37' 35" W

2.44 %

0.82 %

1.79 %

25.79

25.30 FL

825.64 EXIST. MAN HOLE

823.01 EXIST. MAN HOLE

23.61 TC (23.01) FL

CURB RETURN DATA				
N°	R	L	Δ	T
(1)	27	43.405	92° 06' 30"	28.012

CONSTRUCTION NOTES.

1. SAWCUT & REMOVE EXISTING & REPLACE
2. CONST. CURB SIDEWALK PER CITY STD. 325
3. CONST. WEELCHAIR RAMP PER CITY STD. 304
4. CONST. CROSS GUTTER PER CITY STD. 220, W = 6'
5. CONST. 6" C.F. CURB & GUTTER PER CITY STD. 200, TYPE 1
6. POWER POLE TO BE RELOCATED BY OTHERS.
7. CONST. DRIVEWAYS APPROACHES PER CITY STD. 302 - A & B AS SHOWN
8. TRANSITION.
9. INSTALL 0.33AC OVER COMPACTED NATIVE SOIL AGG. PER SR.#1439 R= 49
10. INSTALL STREET TREE PER CITY STD. DNG. @ 1.5' FROM P.L. * 3. TREE*
11. INSTALL STOP SIGN PER CITY STD G62A
12. INSTALL STREET NAME PER CITY STD G62A.
13. EXIST. WATER METER TO BE RELOCATED BY CITY FORCES.
14. CONST. UNDER S/W DRAIN PER CITY STD. 411. ⚠

*NOTE : REVISION ON THIS SHEET APPLIES FOR CHANGES WEST OF COLLEGE AVENUE CENTERLINE ONLY.

REVISION APPROVED BY: (SHT 1 & 3) * ⚠

JEFFREY D. SIMS

R.C.E. NO. 46212 EXPIRES: 12-31-94

REGISTERED PROFESSIONAL ENGINEER JEFFREY D. SIMS No. 46212 12/31/94 CIVIL STATE OF CALIFORNIA

J.F.DAVIDSON ASSOCIATES, INC. -CIVIL ENGINEERS - SURVEYORS - PLANNERS-

3880 LEMON ST., RIVERSIDE, CA 92501, (909) 686-1070, FAX 909-686-5004

27240 JEFFERSON ST., TEMECULA, CA 92590, (909) 699-1070, FAX 909-699-1881

73-064 COUNTRY CLUB DR., PALM DESERT, CA 92260, (619) 340-1070, FAX 619-340-0180

AS BUILT 3/1/95 RMM

SO. CALIFORNIA GAS COMPANY	PACIFIC BELL	CENCOM CABLE TV.	CITY OF RIVERSIDE ELECT. DEPT.	CITY OF RIVERSIDE WATER DEPT.
BY : D. Q. Jr.	BY :	BY :	BY :	BY : Richard Dale
DATE : 8/24/90	DATE :	DATE : 8-15-90	DATE : 8/24/90	DATE : 2-1-91

Underground Service Alert Call: TOLL FREE 1-800 422-4133 TWO WORKING DAYS BEFORE YOU DIG

BENCH MARK

F2.B FD.CONC.MON.WITH NAIL CAPPED @ INTERSECTION OF SIERRA VISTA AVE. AND NORWOOD AVE. EL.786.734

F.C.ELAHL ASSOCIATES INC.
7250 MAGNOLIA AVENUE
RIVERSIDE, CA 92504
TEL : (714) 785 - 1100
FAX : (714) 785 - 1197

MARK	REVISIONS	APPR.	DATE
⚠	"AS BUILT" PLAN	MZ	2/14/95
⚠	DRIVEWAY APPROACH DELETED	MZ	7/7/94
⚠	REVISED TAPER & A.C PAVING	MZ	5/4/94

DESIGNED BY M.Z. DRAWN BY J.Y.C. CHECKED BY F.C.E.

CITY OF RIVERSIDE
PUBLIC WORKS DEPARTMENT

APPROVED BY	DATE	BY
PRINCIPAL ENGINEER	4/6/94	DP
PARK DEPARTMENT	4-7-94	DP
TRAFFIC DIVISION	4-7-94	DP
CHIEF P.W. ENGINEER	4-12-94	RMC
	2/14/95	RMC

APPROVED BY : PUBLIC WORKS DIRECTOR
DATE : 4-18-94

STREET IMPROVEMENT PLANS
STA. 12+66.50 TO 10+00.00 COLLEGE AVENUE
STA. 6+93.00 TO 10+00.00 CARMINE STREET
TRACT 22239

HORIZ. SCALE : 1" = 20' VERT. SCALE : 1" = 2'

ACCOUNT N°.

R - 3183

SHEET 3 OF 3

RC-3158-S

INDEXED 4-21-93 GH

RIVERSIDE BLUEPRINT - RIVERSIDE, CALIF.