STREET IMPROVEMENT PLANS
MAGNOLIA TOWN CENTER
IN THE CITY OF RIVERSIDE

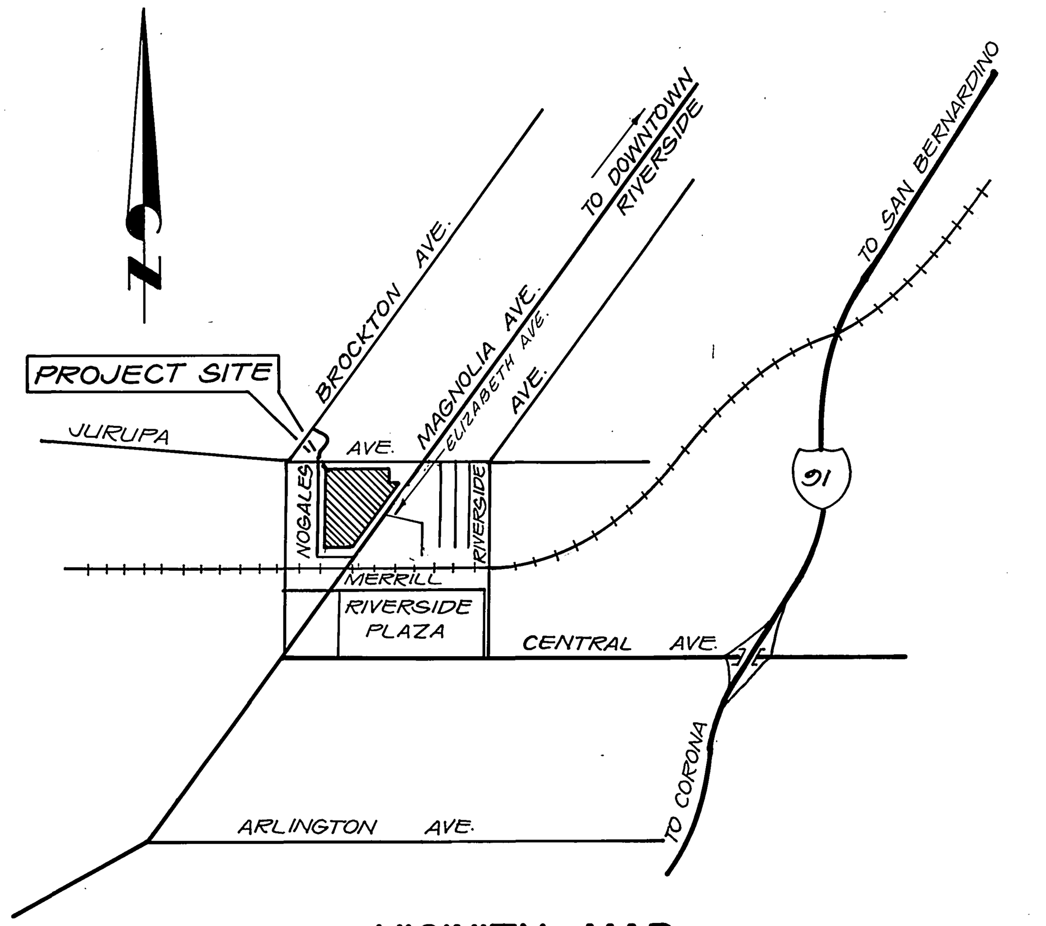

VICINITY MAP

NOT TO SCALE

GENERAL NOTES

1. IT SHALL BE THE RESPONSIBILITY OF THE CONTRACTOR TO CLEAR THE RIGHT-OF-WAY IN ACCORDANCE WITH THE PROVISIONS OF LAW AS IT AFFECTS EACH UTILITY INCLUDING IRRIGATION LINES AND APPURTENANCES AND AT NO COST TO THE CITY.
2. CONSTRUCTION SHALL BE IN ACCORDANCE WITH THE CITY OF RIVERSIDE DEPARTMENT OF PUBLIC WORKS, STANDARD DRAWINGS, STANDARD DRAWING NO. 10 AND THE STANDARD SPECIFICATIONS FOR PUBLIC WORKS CONSTRUCTION, CURRENT EDITION.
3. THE PRIVATE ENGINEER SIGNING THESE PLANS IS RESPONSIBLE FOR ASSURING THE ACCURACY AND ACCEPTABILITY OF THE WORK HEREON. IN THE EVENT OF DISCREPANCIES ARISING DURING CONSTRUCTION, THE PRIVATE ENGINEER SHALL BE RESPONSIBLE FOR DETERMINING AN ACCEPTABLE SOLUTION AND REVISING THE PLANS FOR APPROVAL BY THE CITY.
4. QUANTITIES SHOWN ARE FOR IMFORMATION ONLY AND THE CITY OF RIVERSIDE IS NOT RESPONSIBLE FOR THEIR ACCURACY.
5. THE DEVELOPER SHALL BE RESPONSIBLE FOR PRESERVING OR RE-ESTABLISHING AND REFERENCING SURVEY MONUMENTS DESTROYED, DISTURBED OR BURIED AS A RESULT OF CONSTRUCTION SHOWN HEREON.
6. SEE "STREET LIGHTING PLANS" FOR QUANTITY AND LOCATION OF REQUIRED STREET LIGHTS. *RELOCATION OF STREET LIGHTS TO BE COORDINATED W/PUBLIC UTILITY ELEC. DEPT. TO MINIMIZE OUTAGE TIME.*
7. ALL FLAGGED ELEVATIONS SHALL BE STAKED IN THE FIELD BY THE PRIVATE ENGINEER.
8. TRIM EDGE OF EXISTING PAVEMENT WHERE NEW PAVEMENT JOINS TO A SMOOTH, STRAIGHT LINE. CONSTRUCT MATCH-UP PAVING AS SHOWN ON PLAN AND OVERLAY PAVING AS DIRECTED IN THE FIELD TO PRODUCE A SMOOTH SECTION.
9. CONSTRUCT DRIVEWAY APPROACHES PER STD. DWG. 302. EXACT SIZE AND LOCATION TO BE AS SHOWN.
10. STREET OPENING PERMIT FOR CONSTRUCTION AND/OR MODIFICATION OF TRAFFIC SIGNAL FACILITIES IS REQUIRED.
11. ALL TRAFFIC SIGNS SHALL BE INSTALLED PRIOR TO OPENING THE STREETS TO TRAFFIC.
12. ANY TRAFFIC CONTROL STRIPING OBLITERATED AND/OR BADLY WORN DURING CONSTRUCTION SHALL BE RESTORED BY THE CONTRACTOR WITHIN FIVE DAYS AFTER NOTIFICATION FROM THE CITY INSPECTORS.
13. STREET IMPROVEMENT WORK THAT WILL CAUSE DAMAGE TO THE DETECTOR LOOP (S) SHALL NOT BE PERFORMED UNTIL TRAFFIC SIGNAL MAINTENANCE PERSONNEL HAVE BEEN NOTIFIED AT (714) *351-6096* AND THE NECESSARY TIMING ADJUSTMENTS MADE TO MAINTAIN SIGNAL OPERATION.
14. FINAL STRIPING FOR TRAFFIC CONTROL AND/OR PAVEMENT MARKING TO BE THE RESPONSIBILITY OF THE DEVELOPER.
15. THE CONTRACTOR SHALL CALL IN A LOCATION REQUEST TO UNDERGROUND SEVICE ALERT (USA), PHONE NO. 1-800-422-4133, TWO WORKING DAY BEFORE DIGGING. NO CONSTRUCTION PERMIT WILL BE ISSUED BY THE PUBLIC WORKS DEPARTMENT INVOLVING EXCAVATION FOR UNDERGROUND FACILITIES UNLESS THE APPLICANT HAS BEEN PROVIDED AN INQUIRY IDENTIFICATION NUMBER BY U.S.A.
16. IN PAVEMENT OVERLAY AREAS, DISTRESSED EXISTING PAVEMENT SHALL BE REMOVED AND REPLACED AS DIRECTED BY THE INSPECTOR PRIOR TO OVERLAYING WITH A.C. PAVING.
17. THE CONTRACTOR SHALL COORDINATE TRENCHING FOR CABLE TELEVISION WITH OTHER TRENCHING WITHIN THE PROJECT.
18. *CONTACT PUBLIC UTILITIES DEPT. 3 WEEKS PRIOR TO START OF CONSTRUCTION TO COORDINATE INSTALLATION OF ELECTRICAL FACILITIES.*
GENERAL NOTES CONT. STREET TREE PLANTING AND RELOCATION SEE SHT. 3.
19. *DEVELOPER / CONTRACTOR TO GIVE CITY WATER DIVISION TEN (10) WORKING DAYS WRITTEN NOTICE PRIOR TO START OF CONSTRUCTION & ALLOW CITY TWENTY (20) WORKING DAYS FOR COMPLETION OF WORK. (714) 351-6150*
20. *SEE TRAFFIC SIGNAL PLANS X-213 AND X-205A FOR TRAFFIC SIGNAL FACILITIES AND PLAN XL-263 FOR STRIPING.*

CONSTRUCTION NOTES & QUANTITY ESTIMATE

	ITEM DESCRIPTION	UNIT	QUANTITY
1	CONSTRUCT 0.46'A.C. OVER 1.30'CRUSHED A.B. PER TYPICAL SECTION	S.F.	6099
2	CONSTRUCT 8" CURB AND GUTTER PER CITY STD 200, TYPE I	L.F.	1144
3	CONSTRUCT 8" CURB ONLY PER CITY STD 200 TYPE II	L.F.	47
4	REMOVE EXISTING CURB AND GUTTER	L.F.	1385
5	REMOVE EXISTING SIDEWALK	S.F.	16319
7	CONSTRUCT SIDEWALK PER CITY STD. 325	S.F.	10613
8	REMOVE EXIST. DRIVEWAY AND CONSTRUCT CURB & GUTTER PER CITY STD. 200	EA.	9
9	CONSTRUCT DRIVEWAY PER CITY STD. 302	EA.	5
10	CONSTRUCT 0.25'A.C. OVER 0.76'CRUSHED A.B. PER TYPICAL SECTION	S.F.	1635
11	REMOVE EXISTING CURB	L.F.	310
12	REMOVE EXISTING PAVEMENT	S.F.	1970
13	CONSTRUCT CONCRETE CROSS GUTTER PER CITY STD. 220, W = 6'	S.F.	1084
14	REMOVE AND REPLACE A.C. & BASE MATERIAL IN KIND	S.F.	361
22	*CONSTRUCT PARKWAY DRAIN PER CITY STD. 410 (SEE PLAN FOR "W")*		
16	*OVERLAY PAVING AND JOIN TO A SMOOTH FINISH.*	S.F.	4950
17	*PLANT STREET TREE TO THE SPECIFICATIONS OF THE PARK & RECREATION DEPT.*	EA.	2
18	*RELOCATE PALM TREE OFF-SITE TO THE SPECIFICATIONS OF THE PARK AND RECREATION DEPT.*		
19	*REMOVE STREET TREE TO THE SPECIFICATIONS OF THE PARK AND RECREATION DEPT.*		
20	*RELOCATE PALM TREES AS SHOWN TO THE SPECIFICATIONS OF THE PARK AND RECREATION DEPT.*		
21	*CONSTRUCT WHEELCHAIR RAMP PER CITY STD. 304*		

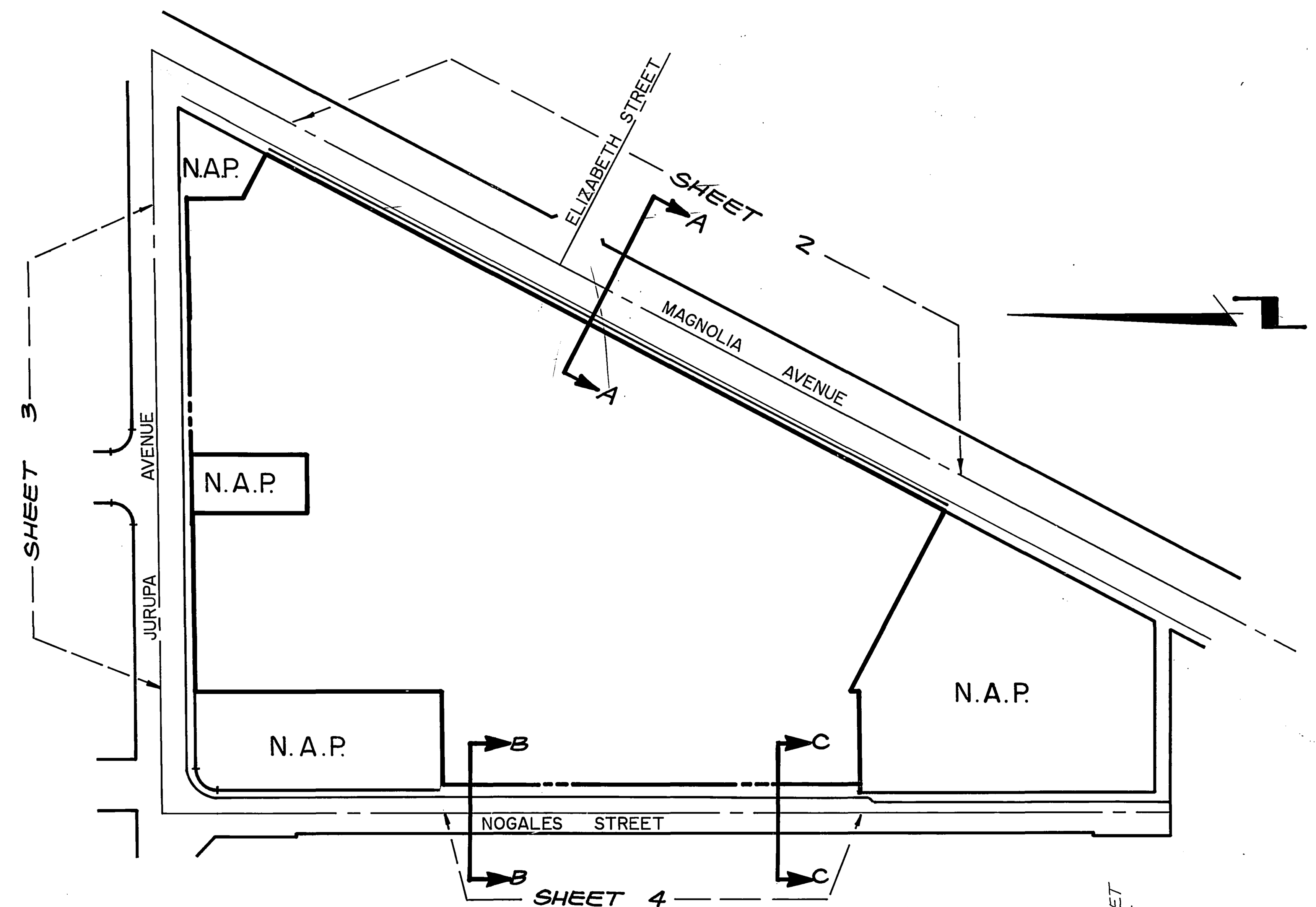

INDEX MAP

SCALE: 1" = 150'

HOLD HARMLESS INDEMNIFICATION CLAUSE

THE CONTRACTOR AGREES THAT HE SHALL ASSUME SOLE AND COMPLETE RESPONSIBILITY FOR JOB SITE CONDITIONS DURING THE COURSE OF CONSTRUCTION OF THE PROJECT INCLUDING SAFETY OF ALL PERSONS AND PROPERTY; THAT THIS REQUIREMENT SHALL APPLY CONTINUOUSLY AND NOT BE LIMITED TO NORMAL WORKING HOURS; AND THAT THE CONTRACTOR SHALL DEFEND, INDEMNIFY, AND HOLD THE CITY OF RIVERSIDE, THE OWNER, AND THE PRIVATE ENGINEERS HARMLESS FOR ANY AND ALL LIABILITY; REAL OR ALLEGED, IN CONNECTION WITH PERFORMANCE OF WORK ON THIS PROJECT, EXCEPTING. FOR LIABILITY ARISING FROM THE SOLE NEGLIGENCE OF THE OWNER OR THE ENGINEER.

EXISTING UNDERGROUND STRUCTURES

THE EXISTENCE AND LOCATION OF ANY UNDERGROUND UTILITY PIPE STRUCTURES OR CONDUITS SHOWN ON THESE PLANS ARE OBTAINED BY A SEARCH OF THE AVAILABLE RECORDS. TO THE BEST OF OUR KNOWLEDGE, THERE ARE NO EXISTING UTILITIES EXCEPT AS SHOWN ON THESE PLANS. IT SHALL BE THE CONTRACTOR'S RESPONSIBILITY TO NOTIFY THE OWNERS OF THE UTILITIES OR STRUCTURES CONCERNED BEFORE STARTING WORK. CONTRACTOR FURTHER ASSUMES ALL LIABILITY AND RESPONSIBILITY FOR THE UNDERGROUND UTILITY PIPES, CONDUITS OR STRUCTURES SHOWN OR NOT SHOWN ON THESE PLANS.

NOTICE TO CONTRACTOR

CONTRACTOR SHALL VERIFY ALL CONDITIONS AND DIMENSIONS AND SHALL REPORT ALL DISCREPANCIES TO THE ENGINEER PRIOR TO THE COMMENCEMENT OF WORK.

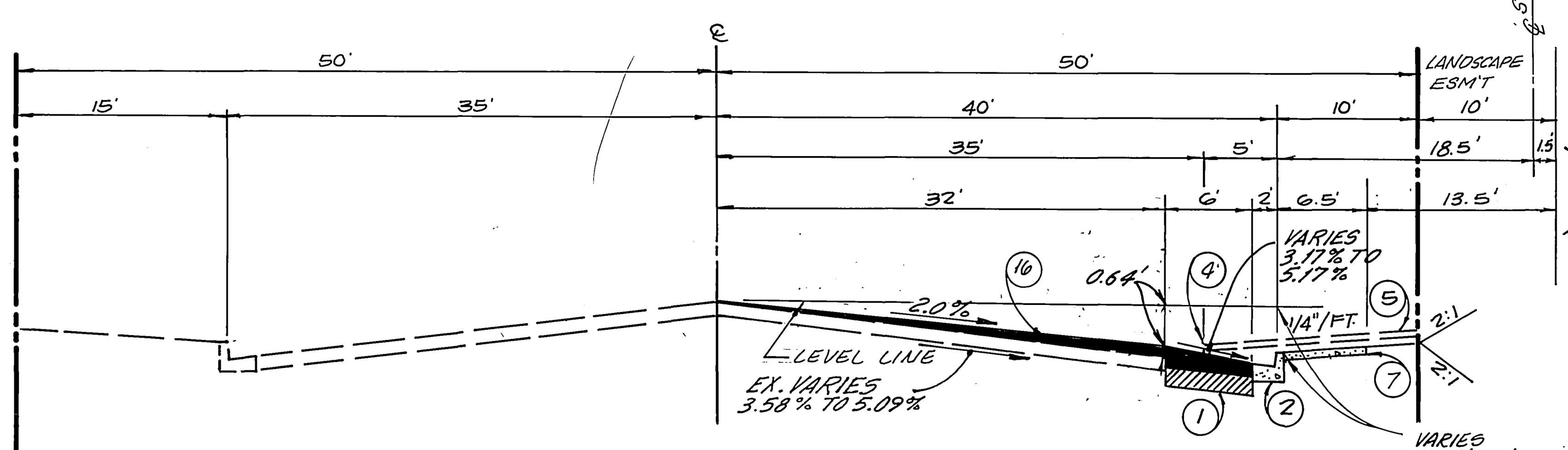

TYPICAL SECTION A - A
MAGNOLIA AVENUE

STA. 1+92.96 TO STA. 11+82.46
NOT TO SCALE
T.I. = 9.5

CONST. 0.46'A.C. OVER 1.30' C.A.B. PER S.R. *1438*
R-VALUE = 26

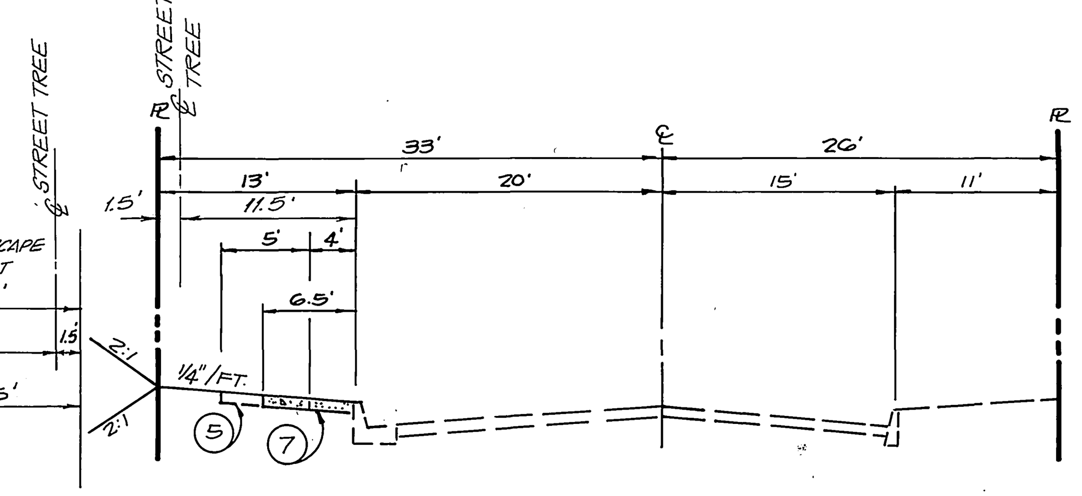

TYPICAL SECTION B - B
NOGALES STREET

STA. 3+59.64 TO STA. 5+42.90
NOT TO SCALE
T.I. = 5.0

CONST. 0.25'A.B OVER 0.76'C.A.B.
PER S.R. *1438*
R-VALUE = 26

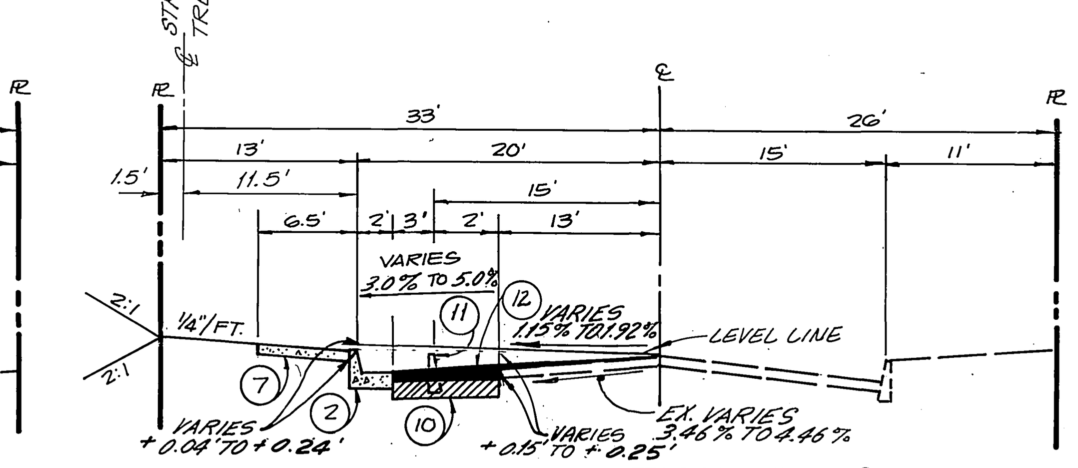

TYPICAL SECTION C - C
NOGALES STREET

STA. 5+42.90 TO STA. 8+42.69
NOT TO SCALE
T.I. = 6.0

AS BUILT 3/31/94

CITY OF RIVERSIDE WATER SYSTEM	CITY OF RIVERSIDE OVERHEAD & UNDERGROUND (ELECTRICAL)	PACIFIC BELL TELEPHONE	SOUTHERN CALIFORNIA GAS COMPANY	CEN COM CABLE T.V.
NOTE: PAYMENT OF FEES FOR CITY WATER DIVISION WORK (REL./ADJ.) HAS NOT BEEN MADE AS OF THIS DATE. (TYP. SHTS. 1-4) — *Richard L. Drolek* APPROVED 2-28-91 DATE	*Wm. Whitten* APPROVED BY 12/19/90 DATE	*V.A. Bradley* APPROVED BY 11/18/90 DATE	*R.P. Baughman* APPROVED BY 12-5-90 DATE	[signature] APPROVED BY 11-1-90 DATE

BENCHMARK:

BRASS DISK STAMPED (H6-B) CAPPED AT THE INTERSECTION OF CENTERLINE OF JURUPA AVE. AND CENTERLINE OF MAGNOLIA AVE. ELEVATION 834.784

UNDERGROUND SERVICE ALERT
1-800-422-4133
CALL TWO WORKING DAYS BEFORE YOU DIG

REGISTERED PROFESSIONAL ENGINEER
BRIAN L. JENSEN
NO: 030534
Exp. 3-31-92
CIVIL
STATE OF CALIFORNIA

THE KEITH COMPANIES
6296 RIVER CREST DRIVE
SUITE K
RIVERSIDE, CA 92507
(714) 653-0234

APPROVED BY: [signature] 5-3-90
BRIAN L. JENSEN REG CIVIL ENGINEER NO. 30534 DATE

MARK	REVISIONS	APPR.	DATE

DESIGNED BY CJ & MT DRAWN BY LB CHECKED BY CJ

FRED

CITY OF RIVERSIDE
PUBLIC WORKS DEPARTMENT

APPROVED BY	DATE	BY
PRINCIPAL ENGINEER	3/17/92	[initials]
PARK DEPARTMENT	3-15-91	[initials]
TRAFFIC DIVISION	3-16-92	[initials]
CHIEF P. W. ENGINEER	3-18-92	RHG
	3/18/92	[initials]

APPROVED BY [signature]
PUBLIC WORKS DIRECTOR
DATE 3/20/92

STREET IMPROVEMENT PLANS
MAGNOLIA TOWN CENTER
TITLE SHEET
R-55-890

HORIZ. SCALE: 1" = VERT. SCALE: 1" =

ACCOUNT NO.
R-3205
SHEET 1 OF 4

*P*ST. IMP PLAN TITL SHT - 48 [0.49] PF: 782001 2101 24-Apr-90 01:39 PM / 782001-5304

INDEXED 4-1-92 [initials]

PC 3/90 SIP

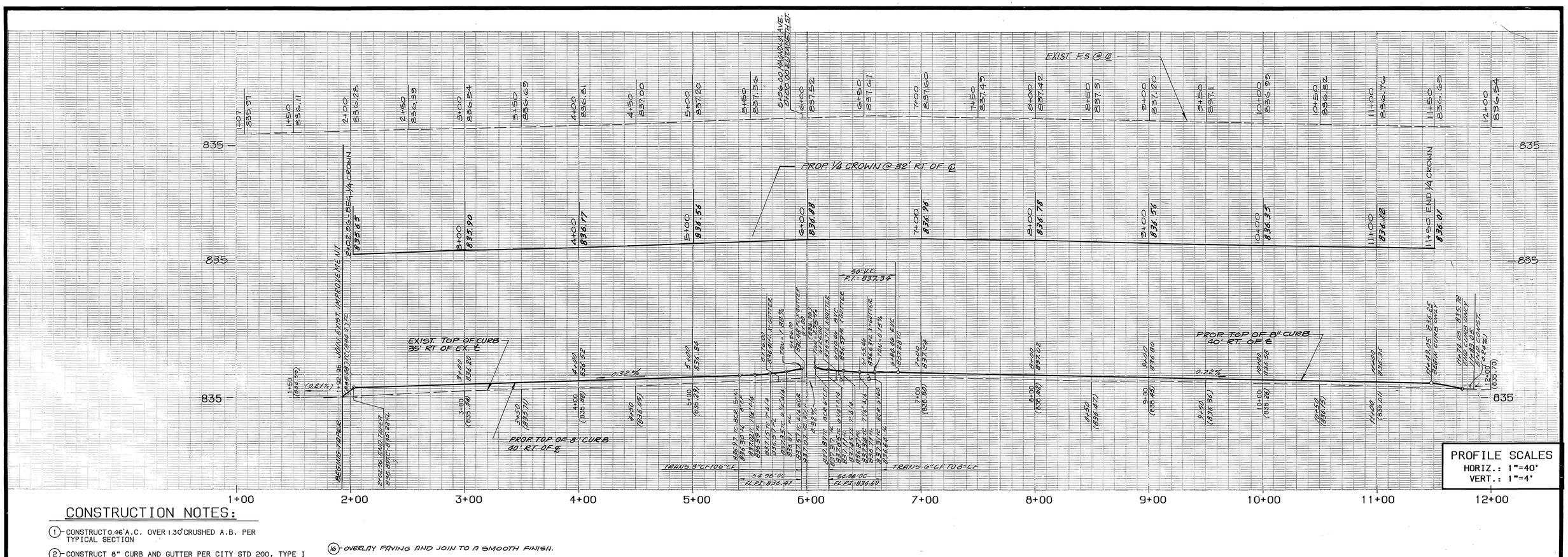

CONSTRUCTION NOTES:

1. CONSTRUCT 0.46' A.C. OVER 1.30' CRUSHED A.B. PER TYPICAL SECTION
2. CONSTRUCT 8" CURB AND GUTTER PER CITY STD 200, TYPE I
3. CONSTRUCT 8" CURB ONLY PER CITY STD. 200, TYPE I
4. REMOVE EXISTING CURB AND GUTTER
5. REMOVE EXISTING SIDEWALK
7. CONSTRUCT SIDEWALK PER CITY STD. 325
9. CONSTRUCT DRIVEWAY PER CITY STD. 302
13. CONSTRUCT CONCRETE CROSS GUTTER PER CITY STD. 220, W = 6'
16. OVERLAY PAVING AND JOIN TO A SMOOTH FINISH.
17. PLANT STREET TREE TO THE SPECIFICATIONS OF THE PARK AND RECREATION DEPT.
18. RELOCATE PALM TREE OFF-SITE TO THE SPECIFICATIONS OF THE PARK AND RECREATION DEPT.
19. REMOVE STREET TREE TO THE SPECIFICATIONS OF THE PARK AND RECREATION DEPT.
21. CONSTRUCT WHEEL CHAIR RAMP PER CITY STD. 304

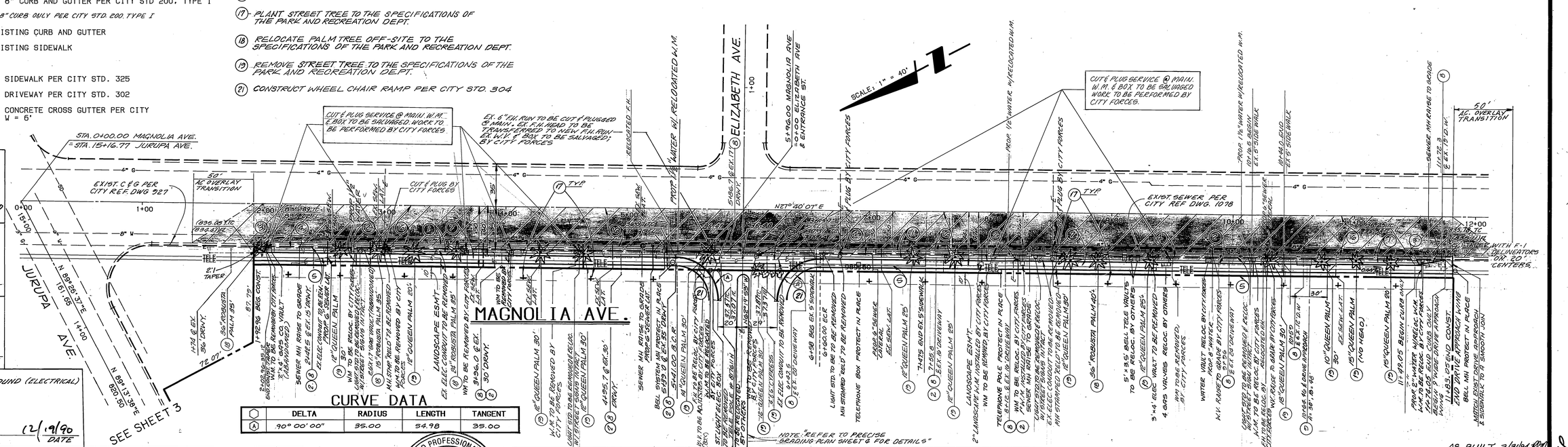

PACIFIC BELL TELEPHONE
J.A. Bradley 11/8/90
APPROVED BY DATE

SOUTHERN CALIFORNIA GAS COMPANY
R.L. Baughman 12-5-90
APPROVED BY DATE

CEN COM CABLE T.V.
11-1-90
APPROVED BY DATE

CITY OF RIVERSIDE OVERHEAD & UNDERGROUND (ELECTRICAL)
12/19/90
APPROVED BY DATE

CURVE DATA

	DELTA	RADIUS	LENGTH	TANGENT
A	90° 00' 00"	35.00	54.98	35.00

BENCHMARK:

BRASS DISK STAMPED (H6-B) CAPPED AT THE INTERSECTION OF CENTERLINE OF JURUPA AVE. AND CENTERLINE OF MAGNOLIA AVE. ELEVATION 834.784

CITY OF RIVERSIDE WATER SYSTEM
Richard J. Dobek 2-28-91
APPROVED DATE

REGISTERED PROFESSIONAL ENGINEER BRIAN L. JENSEN NO: 030534 Exp. 3-31-92 CIVIL STATE OF CALIFORNIA

THE KEITH COMPANIES
6295 RIVER CREST DRIVE SUITE K RIVERSIDE, CA 92507 (714) 653-0234
APPROVED BY: 5-3-90
BRIAN L. JENSEN REG CIVIL ENGINEER NO. 30534 DATE

MARK	REVISIONS	APPR.	DATE

DESIGNED BY CJ&MT DRAWN BY LB CHECKED BY CJ

CITY OF RIVERSIDE
PUBLIC WORKS DEPARTMENT

APPROVED BY	DATE	BY
PRINCIPAL ENGINEER	3/17/92	
PARK DEPARTMENT	3-15-91	
TRAFFIC DIVISION	3-16-92	
CHIEF P.W. ENGINEER	3/18/92	

APPROVED BY
PUBLIC WORKS DIRECTOR
DATE 3/20/92

STREET IMPROVEMENT PLANS
MAGNOLIA TOWN CENTER
MAGNOLIA AVE.
R-55-890

HORIZ. SCALE: 1" = 40' VERT. SCALE: 1" = 4'

AS BUILT 3/31/94

ACCOUNT NO. R-3205

SHEET 2 OF 4

PC 3190 S&P

•P40• ST. IMP. PLN - MAGNOLIA - 48(0.49)PF; 782001 2102, 24-Apr-90 09:51 AM / 782001-5302

INDEXED 4-1-92 LFH

GENERAL NOTES FOR STREET TREE PLANTING AND RELOCATION

1. All related work shall conform to the City of Riverside Park and Recreation Department Standards and City of Riverside Street Tree policies.

2. When calling for inspections contact the Street Tree Inspector a minimum of 48 hours in advance at (714) 351-6126 to schedule an inspection. A Field Notice will be issued as written approval for each stage of inspection. A verbal approval will not be acceptable. Inspections are required:

   a. After completion of final grading of the lots and when all utility services and sewer lateral have been marked, but prior to digging plant pits, all final street tree locations are to be spotted in the field by the street tree inspector;
   b. While digging plant pits and planting/relocating trees;
   c. After planting and all other indicated or specified work has been completed, for start of maintenance;
   d. At end of the maintenance period, the contractor/developer shall call the Street Tree Inspector at (714) 351-6126 for a final acceptance inspection in order to be released from maintenance. Developers bonds will not be released until after receipt of written notification from the City that the trees pass final inspection and the Park and Recreation department is assuming maintenance responsibilities;

3. ALL STREET TREES ARE TO BE PLANTED PRIOR TO OCCUPANCY.

4. The Developer shall be responsible to acceptably maintain all plantings for a minimum period of one (1) year.

5. Street tree planting shall be as follows:

STREET NAME	BOTANICAL NAME/COMMON NAME	MIN. SIZE	APPROX. SPACING	NO. REQ.
A. MAGNOLIA	MAGNOLIA GRANDIFLORA 'MAJESTIC BEAUTY' / MAGNOLIA	24" BOX	45'	17
B. MAGNOLIA	WASHINGTONIA ROBUSTA / MEXICAN FAN PALM	RELOC. TO THE SPACIFICATIONS OF PARK & RECREATION DEPT. (4)		
C. MAGNOLIA	ARECASTRUM ROMANZOFFANUM / QUEEN PALM	REMOVE		13
D. JURUPA	WASHINGTONIA FILIFERA / CALIFORNIA FAN PALM	RELOC. TO THE SPECIFICATIONS OF PARK & RECREATION DEPT. (5)		
~~E. JURUPA~~	~~WASHINGTONIA ROBUSTA / MEXICAN FAN PALM~~	~~RELOC. TO THE SPECIFICATIONS OF PARK & RECREATION DEPT. (5)~~		
F. JURUPA	PODOCARPUS MACROPHYLLUS / YEW PINE	REMOVE TO THE SPECIFICATIONS OF PARK & RECREATION DEPT. (5)		
G. JURUPA	PODOCARPUS GRACILIOR / FERN PINE	15 GAL	45'	7
H. NOGALES	WASHINGTONIA ROBUSTA / MEXICAN FAN PALM	RELOC. AS SHOWN TO THE SPECIFICATIONS OF PARK & RECREATION DEPT.		11
I. NOGALES	REMOVE (2) FRUITLESS MULBERRIES (2) CRAPE MYRTLES (1) HOLLY OAK TO THE SPECIFICATIONS OF THE PARK & RECREATION DEPT.			

6. Both a street tree Relocation/Removal permit as issued by the Park and Recreation Department and a Street Opening permit as issued by the Public Works Department are required prior to commencement of tree relocation and/or removal work. For all existing trees within what will ultimately be the Public Right-of-Way pavement area, backfill of all holes must be inspected by the Public Works Inspector for proper compaction.

7. All Street Trees must be automatically irrigated, except where adjacent to single family or duplex residential uses.

*NOTE: In the interest of public safety and maintenance the Street Tree Inspector shall have the authority to revise the street tree quantities and locations shown on approved plans based upon field conditions found at the time of installation of the trees.

SCALE: 1" = 40'

CUT & PLUG SERVICE @ MAIN W.M. & BOX TO BE SALVAGED WORK TO BE PERFORMED BY CITY FORCES

CUT & PLUG SERVICE @ MAIN W.M. & BOX TO BE SALVAGED WORK TO BE PERFORMED BY CITY FORCES

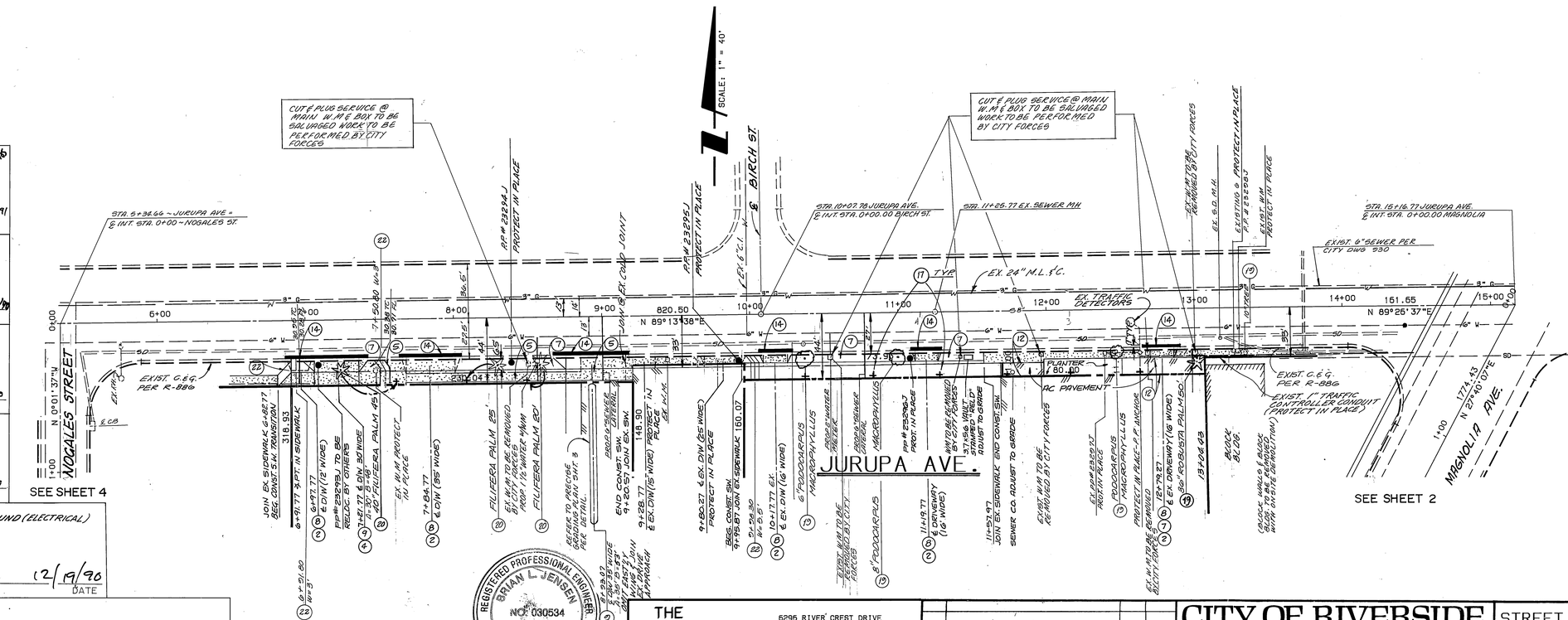

CONSTRUCTION NOTES:

(2) CONSTRUCT 8" CURB AND GUTTER PER CITY STD 200, TYPE I
(4) REMOVE EXISTING CURB AND GUTTER
(5) REMOVE EXISTING SIDEWALK
(7) CONSTRUCT SIDEWALK PER CITY STD. 325
(8) REMOVE EXIST. DRIVEWAY AND CONST. CURB & GUTTER PER CITY STD. 200
(9) CONSTRUCT DRIVEWAY PER CITY STD. 302
(14) REMOVE AND REPLACE A.C. AND BASE MATERIAL IN KIND
(12) REMOVE EXISTING PAVEMENT
(17) PLANT STREET TREE TO THE SPECIFICATIONS OF THE PARK AND RECREATION DEPT.
(18) RELOCATE PALM TREE OFF-SITE TO THE SPECIFICATIONS OF THE PARK AND RECREATION DEPT.
(19) REMOVE STREET TREE TO THE SPECIFICATIONS OF THE PARK AND RECREATION DEPT.
(20) RELOCATE PALM TREE AS SHOWN TO THE SPECIFICATIONS OF THE PARK AND RECREATION DEPT.
(22) CONSTRUCT PARKWAY DRAIN PER CITY STD. 410. (SEE PLAN FOR "W")

CITY OF RIVERSIDE WATER SYSTEM
Richard L. Dubek 2-26-91 APPROVED BY DATE
PACIFIC BELL TELEPHONE
J.A. Bradley 11/8/90 APPROVED BY DATE
SOUTHERN CALIFORNIA GAS COMPANY
R.R. Baughman 12-5-90 APPROVED BY DATE
CEN COM CABLE T.V.
Wm. Pallanck 11-1-90 APPROVED BY DATE
CITY OF RIVERSIDE OVERHEAD & UNDERGROUND (ELECTRICAL)
Wm Whitten 12/19/90 APPROVED BY DATE

BENCHMARK:

BRASS DISK STAMPED (H6-B) CAPPED AT THE INTERSECTION OF CENTERLINE OF JURUPA AVE. AND CENTERLINE OF MAGNOLIA AVE. ELEVATION 834.784

REGISTERED PROFESSIONAL ENGINEER BRIAN L. JENSEN NO. 030534 Exp. 3-31-92 CIVIL STATE OF CALIFORNIA

THE KEITH COMPANIES
6295 RIVER CREST DRIVE SUITE K RIVERSIDE, CA 92507 (714) 653-0234
APPROVED BY: 5-3-90
BRIAN L. JENSEN REG CIVIL ENGINEER NO. 30534 DATE

MARK	REVISIONS	APPR.	DATE

DESIGNED BY CJ DRAWN BY LB CHECKED BY CJ

CITY OF RIVERSIDE
PUBLIC WORKS DEPARTMENT

APPROVED BY	DATE	BY
PRINCIPAL ENGINEER	3/17/92	RS
PARK DEPARTMENT	3-19-92	JM
TRAFFIC DIVISION	3-16-92	CO
CHIEF P.W. ENGINEER	3-18-92	RWK
	3/18/92	WM

APPROVED BY
PUBLIC WORKS DIRECTOR
DATE 3/20/92

STREET IMPROVEMENT PLANS
MAGNOLIA TOWN CENTER
JURUPA AVE
R-55-890

HORIZ. SCALE: 1" = 40' VERT. SCALE: 1" = 4'

AS BUILT 3/31/94 RWM

ACCOUNT NO. R-3205

SHEET 3 OF 4

PC 3190 S.P

FEED

•P40• ST. IMP. PLAN - JURUPA - 4810.49|PF; 782001 2103 24-Apr-90 09:55 AM / 782001-5302

INDEXED 4-1-92 LH

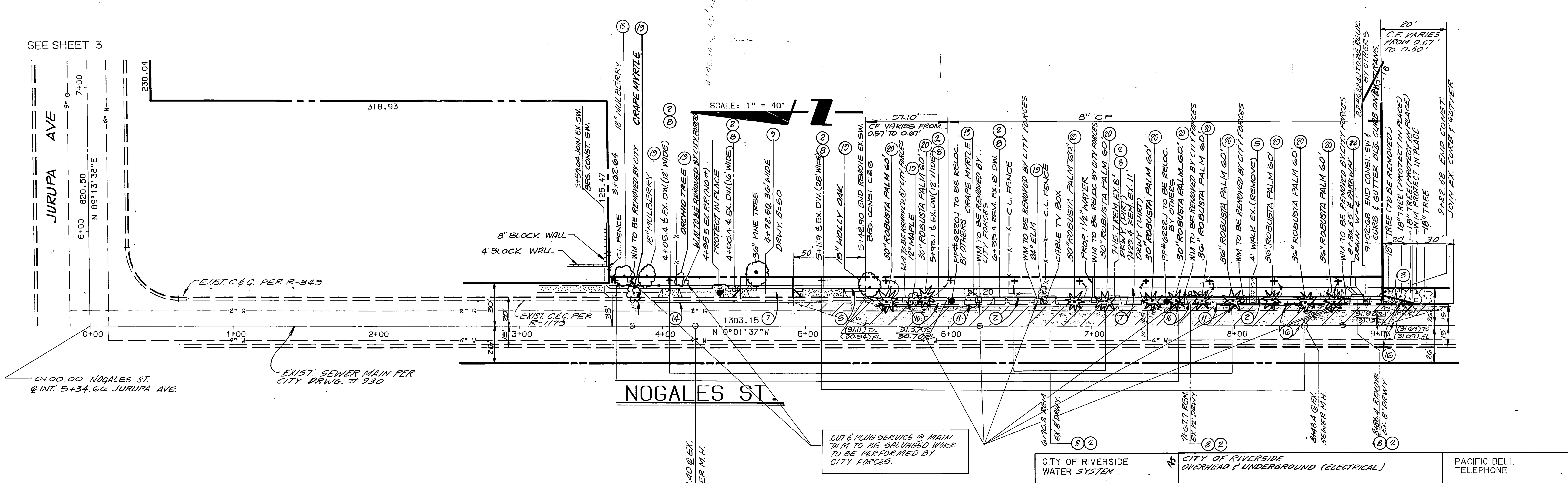

CONSTRUCTION NOTES:

(2) CONSTRUCT 8" CURB AND GUTTER PER CITY STD 200, TYPE I

(3) CONSTRUCT 8" CURB ONLY PER CITY STD. 200 TYPE II

(5) REMOVE EXISTING SIDEWALK

(7) CONSTRUCT SIDEWALK PER CITY STD. 325

(8) REMOVE EXIST. DRIVEWAY & CONST. CURB & GUTTER PER CITY STD. 200.

(9) CONSTRUCT DRIVEWAY PER CITY STD. 302

(10) CONSTRUCT 0.25' A.C. OVER 0.76' CRUSHED A.B. PER TYPICAL SECTION

(11) REMOVE EXISTING CURB

(14) REMOVE AND REPLACE A.C. AND BASE MATERIAL IN KIND

(16) OVERLAY PAVING AND FEATHER TO A SMOOTH FINISH.

(19) REMOVE STREET TREE TO THE SPECIFICATIONS OF THE PARK AND RECREATION DEPT.

(20) RELOCATE PALM TREES AS SHOWN TO THE SPECIFICATIONS OF THE PARK AND RECREATION DEPT.

(22) CONSTRUCT PARKWAY DRAIN FOR CITY STD. 410 (SEE PLAN FOR "W") OMIT CONC. TRANS.

AS BUILT 3/31/94 RJM

CITY OF RIVERSIDE WATER SYSTEM	CITY OF RIVERSIDE OVERHEAD & UNDERGROUND (ELECTRICAL)	PACIFIC BELL TELEPHONE	SOUTHERN CALIFORNIA GAS COMPANY	CEN COM CABLE T.V.
Richard L. Drobek 2-28-91 APPROVED DATE	Wm Whitten 12/19/90 APPROVED BY DATE	J.A. Bradley 11/8/90 APPROVED BY DATE	R.L. Baughman 12-5-90 APPROVED BY DATE	11-1-90 APPROVED BY DATE

BENCHMARK:

BRASS DISK STAMPED (H6-B) CAPPED AT THE INTERSECTION OF CENTERLINE OF JURUPA AVE. AND CENTERLINE OF MAGNOLIA AVE. ELEVATION 834.784

REGISTERED PROFESSIONAL ENGINEER BRIAN L. JENSEN NO: 030534 Exp. 3-31-92 CIVIL STATE OF CALIFORNIA

THE KEITH COMPANIES
6296 RIVER CREST DRIVE
SUITE K
RIVERSIDE, CA 92507
(714) 653-0234

APPROVED BY: [signature] 5-3-90
BRIAN L. JENSEN REG CIVIL ENGINEER NO. 30534 DATE

MARK	REVISIONS	APPR.	DATE

DESIGNED BY CJ DRAWN BY LB CHECKED BY CJ

FRED

CITY OF RIVERSIDE
PUBLIC WORKS DEPARTMENT

APPROVED BY	DATE	BY
PRINCIPAL ENGINEER	3/17/92	
PARK DEPARTMENT	3-15-91	
TRAFFIC DIVISION	3-6-92	
CHIEF P. W. ENGINEER	3/18/92	M.G
	3/18/92	

APPROVED BY [signature]
PUBLIC WORKS DIRECTOR
DATE 3/20/92

STREET IMPROVEMENT PLANS
MAGNOLIA TOWN CENTER
NOGALES ST.
R-55-890

HORIZ. SCALE: 1" = 40' VERT. SCALE: 1" = 4'

ACCOUNT NO.

R-3205

SHEET 4 OF 4

PC 3190 S&P

•P40• ST. IMP. PLN - NOGALES - 48 [0.49] PF: 782001 2104 24-Apr-90 09:48 AM / 782001-5302

INDEXED 4-1-92 4H