# RIVERSIDE CALIFORNIA

CITY OF RIVERSIDE — INCORPORATED 1883

# PUBLIC WORKS DEPARTMENT

## CANYON CREST DRIVE EXTENSION

### FROM COUNTRY CLUB DRIVE TO VIA VISTA DRIVE

## GENERAL NOTES FOR STREET TREE PLANTING

1. All related work shall conform to the City of Riverside Park and Recreation Department Standards and City of Riverside Street Tree policies.
2. When calling for inspections contact the Street Tree Inspector a minimum of 48 hours in advance at (909) 351-6126 to schedule an inspection. A Field Notice will be issued as written approval for each stage of inspetion. A verbal approval will not be acceptable. Inspections are required:
   a. After completion of final grading of the lots and when all utility services and sewer lateral have been marked, but prior to digging plant pits, all final street tree locations are to be spotted in the field by the Street Tree Inspector;
   b. while digging plant pits and planting/relocating trees;
   c. After planting and all other indicated or specified work has been completed, for start of maintenance;
   d. At end of the maintenance period, the contractor/developer shall call the Street Tree Inspector at (909)351-6126 for a final acceptance inspection in order to be released from maintenance, Developers bonds will not be released until after receipt of written notification from the City that the trees pass final inspection and the Park and Recreation Department is assuming maintenance responsibilities;
3. All STREET TREES ARE TO BE PLANTED PRIOR TO OCCUPANCY.
4. The developer shall be responsible to acceptably maintain all plantings for a minimun period of one (1) year.
5. Street tree planting shall be as follows:

| Street Name | Botanical Name/ Common Name | Minimum Size | Approximate Spacing | # Required |
|---|---|---|---|---|
| Canyon Crest Drive | paltanus acerfolia london plain tree | 15 gal | 45' oc | 50 |

Both a street tree Relocation/Removal permit as issued by the Park and Recreation Department and a Street Opening permit as issued by the Public Works Department are required prior to commencement of tree relocation and/or removal work, For all existing trees within what will ultimately be the Public Right-of Way pavement area, backfill of all holes must be inspected by the Public Works Inspector for proper compaction.

All Street Trees must be automatically irrigated, except where adjacent to single family or duplex residential uses.

* NOTE: In the interest of public safety and maintenance the Street Tree Inspector shall have the authority to revise the street tree quantities and locations shown on approved plans based upon field conditions found at the time of installation of the trees.

## GENERAL CONSTRUCTION NOTES:

1. EXISTING UTILITIES SHOWN ON THE PLAN, ARE PLOTTED FROM UTILITY RECORDS. THE CONTRACTOR IS REQUIRED TO TAKE DUE PRECAUTIONARY MEASURES TO LOCATE AND PROTECT ALL UTILITIES WHETHER OR NOT SHOWN ON THIS PLAN.
2. PRIME CONTRACTORS BIDDING THIS WORK SHALL HAVE A CLASS "A", "C-12" LICENSE.
3. ALL ELEVATIONS SHOWN ON THE PLANS SHALL BE STAKED IN THE FIELD.
4. ALL CONSTRUCTION ACTIVITY SHALL BE RESTRICTED TO WEEKDAY HOURS BETWEEN 7:00 A.M. AND 6:00 P.M..
5. CONSTRUCTION SHALL BE IN ACCORDANCE WITH THE CITY OF RIVERSIDE, DEPARTMENT OF PUBLIC WORKS, STD. DRAWINGS, AND THE STD. SPECIFICATIONS FOR PUBLIC WORKS CONSTRUCTION 1991 EDITION.
6. CONFLICTING UTILITIES SHOWN WITHIN THE CONSTRUCTION AREA WILL BE RELOCATED PRIOR TO CONSTRUCTION.
7. ALL RIP-RAP WILL BE NATURAL RIVER ROCK (COBBLES), NOT BLASTED ROCK.
8. GROUT WILL BE COLOR TREATED "EARTH BROWN" TO BLEND INTO NATURAL SURROUNDING TERRAIN.
9. ALL DRAINAGE FEATURES INCLUDING DITCHES, HEADWALLS, ETC. WILL BE COLOR TREATED "EARTH BROWN" TO BLEND IN WITH NATURAL SURROUNDING TERRAIN.
10. (2) FINAL FENCING PLAN TO BE DETERMINED BY DESIGN REVIEW BOARD.

| CITY OF RIVERSIDE PLANNING DEPT. (2) | CITY OF RIVERSIDE PARKS A RECREATION DEPT. (3) |
|---|---|
| Diane Jenkins 8/17/98 APPROVED BY / DATE | [signature] 5-1-02 APPROVED BY / DATE |

## CONSTRUCTION NOTES:

1. CONSTRUCT 0.28' A.C. PAVEMENT OVER 0.88' AGGREGATE BASE. (R-VALUE=45).
2. CONSTRUCT CURB & GUTTER PER CITY OF RIVERSIDE STD. DWG. NO. 200 TYPE I (6" CURB FACE).
7. REMOVE & SALVAGE EXIST. BARRICADE AND W81 SIGNS..
8. REMOVE & RELOCATE EXIST. CHAIN LINK FENCE.
11. PROTECT IN PLACE.
12. INSTALL F-1 DELINEATOR @ 20' O.C.
14. CONSTRUCT 3' P.C.C. V-DITCH. SEE DETAIL THIS SHEET.
16. CONSTRUCT 6' P.C.C. V-DITCH. SEE DETAIL THIS SHEET.
20. INSTALL TRAFFIC SIGN PER CITY OF RIVERSIDE STD. DWG. NO. 666.
22. CONSTRUCT TYPE E A.C. DIKE PER CALTRANS STANDARD PLAN A87.
23. INSTALL GUARD RAIL PER CITY OF RIVERSIDE STD. DWG. NO. 650, EXCLUDE PAINTING AND REFLECTOR REQUIREMENTS.
24. REMOVE EXIST. A.C. AND REPLACE WITH 0.28' A.C. PAVEMENT OVER 0.88' AGGREGATE BASE.
25. REMOVE EXISTING TREE.
26. CONSTRUCT A.C. OVERSIDE DRAIN PER CALTRANS STANDARD PLAN D87-B.

(2)
4. CONSTRUCT P.C.C. CURB SIDEWALK PER CITY OF RIV. STD. DWG. NO. 325.
5. REMOVE EXIST. A.C DIKE & PAVEMENT
6. SAWCUT EXIST. PAVEMENT
10. INSTALL 2X4 REDWOOD HEADER

(2)
17. CONST. UNDER SIDEWALK DRAIN PER CITY OF RIV. STD. 411
21. PROTECT IN PLACE EXIST. ST. LIGHT.
29. REMOVE EXIST. CABLE & ST. LIGHT PULL BOX (240V). RELOCATE TO NEW LOCATIONS & EXTEND EXIST. 1-1½" DB AS SHOWN. INSTALL 4-600V THW CABLES
30. INSTALL 1½" ST. LIGHT CONDUIT AND 4 #4 CU 600V THW CABLES

(2) 31. CONSTRUCT DRIVEWAY PER CITY OF RIV. STD. 302 TYPE I, A= 10'
(2) 32. RELOCATE EXISTING STREET LIGHT PER CITY OF RIV. DWG L5-1072
(2) 33. CONSTRUCT WHEELCHAIR RAMP PER CITY OF RIV. STD. 304.
(2) 27. CONSTRUCT 0.75"AC PAVEMENT ONLY.
(2) 28. ADJUST EXIST. STREET LIGHT STD. TO MATCH PROPOSED TC
(2) 34. INSTALL WROUGHT IRON FENCE PER LANDSCAPE & FENCE PLAN
(3) 35. INSTALL PARK FENCE PER DETAIL ON THIS SHEET.

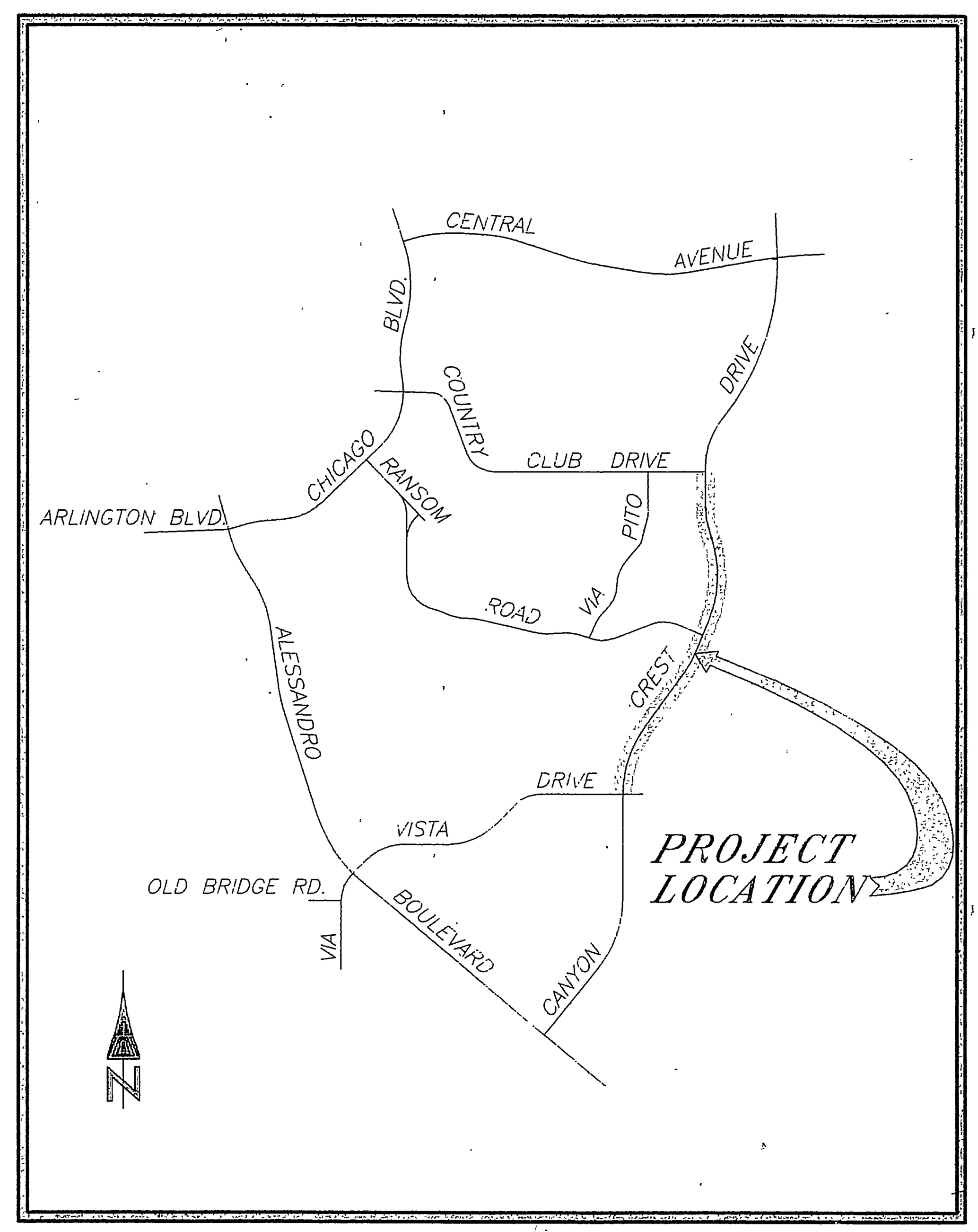


## PROJECT LOCATION MAP

0 KM. 1 KM. 2 KM 3 KM.
0' 1000' 2000' 3000' 4000' 5000' 6000' 7000'

SCALE: 1"=2,000'

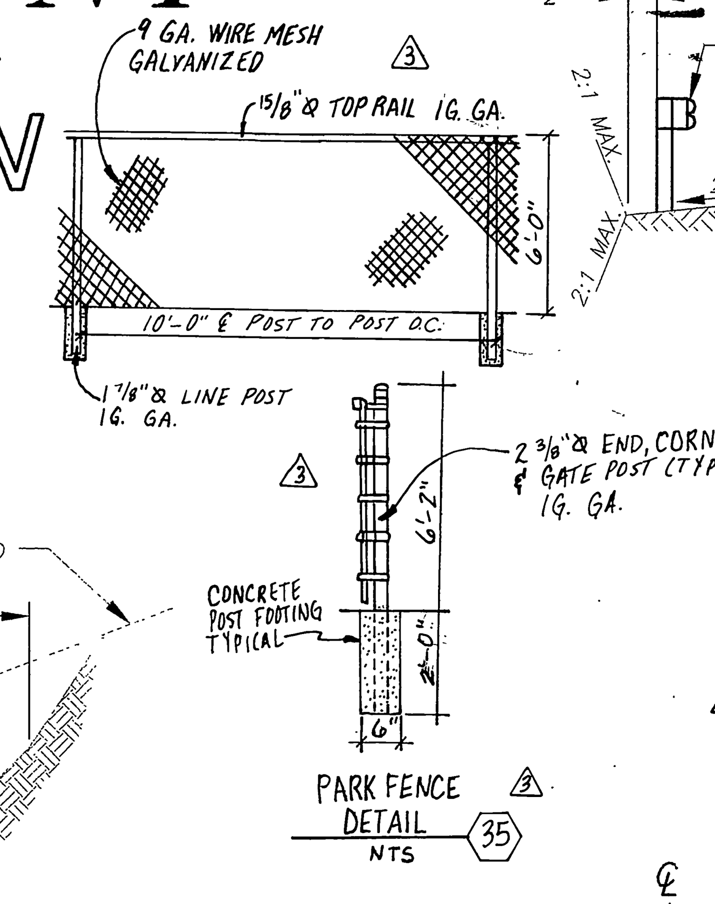


PARK FENCE DETAIL (35) (3)
NTS

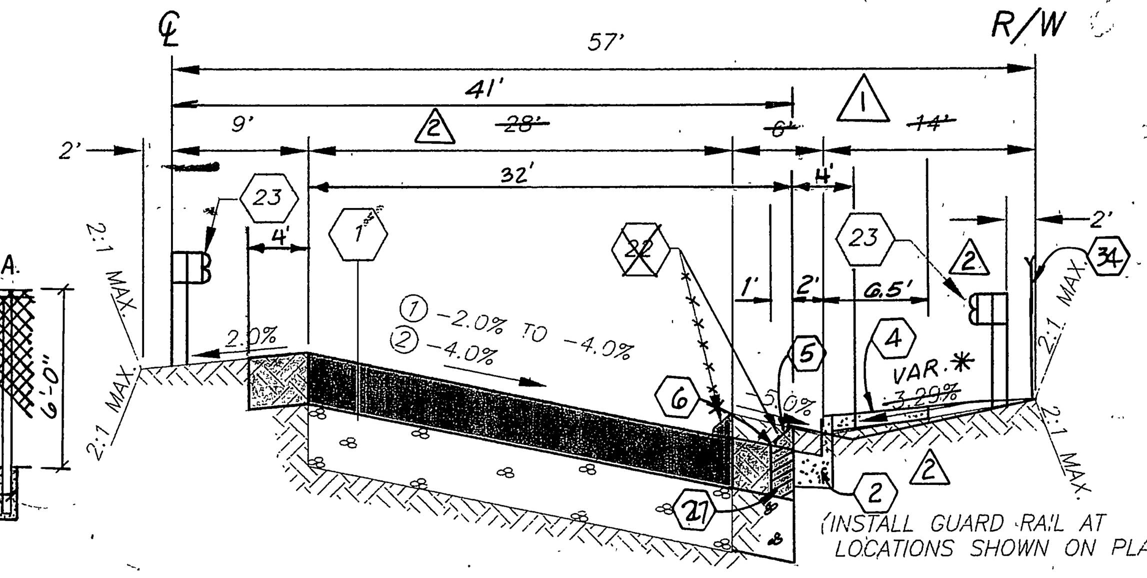


### TYPICAL SECTION

SCALE: HORIZ. 1"=10', VER. 1"=2'

① STA. 90+00 TO STA. 92+00
② STA. 92+00 TO STA. 100+50
① STA. 100+50 TO STA. 104+50
~~① STA. 105+80 TO STA. 107+90~~
(2) ~~② STA. 107+90 TO STA. 109+00~~
~~① STA. 109+00 TO STA. 113+00~~
T.I. = 8.5

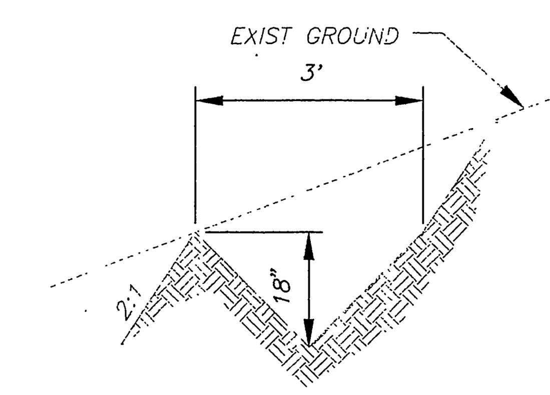


### TYPICAL EARTH BROW DITCH DETAIL

SECTION "A-A"
SCALE: 1" = 2'-0"

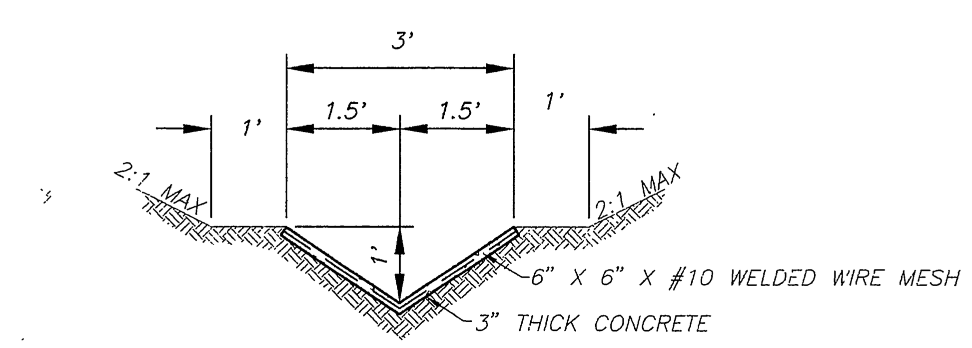


(14) 3' P.C.C. V-DITCH DETAIL

SCALE: 1" = 2'-0"

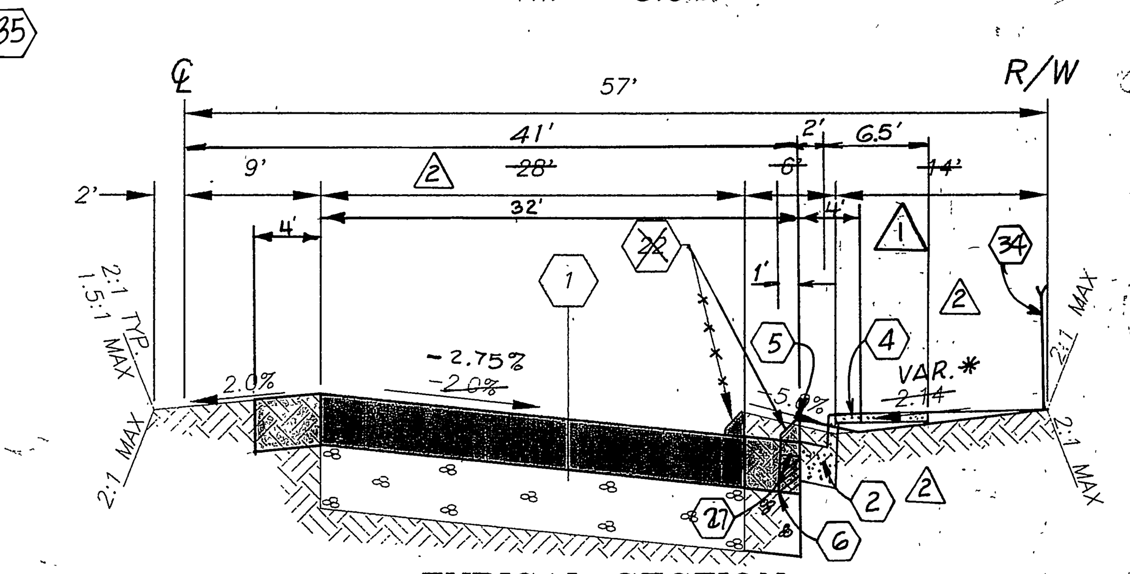


### TYPICAL SECTION

SCALE: HORIZ. 1"=10', VER. 1"=2'

STA. 89+00 TO STA. 90+00
(2) ~~STA. 104+50 TO STA. 105+80~~
STA. ~~113+00~~ 116+86 TO STA. ~~117+00~~
T.I. = 8.5

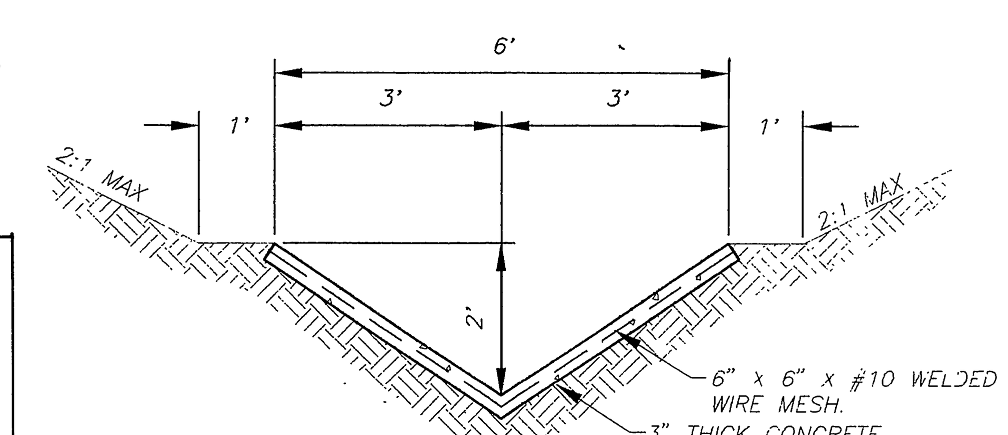


(16) 6' P.C.C. V-DITCH DETAIL (2)

SCALE: 1" = 2'-0"

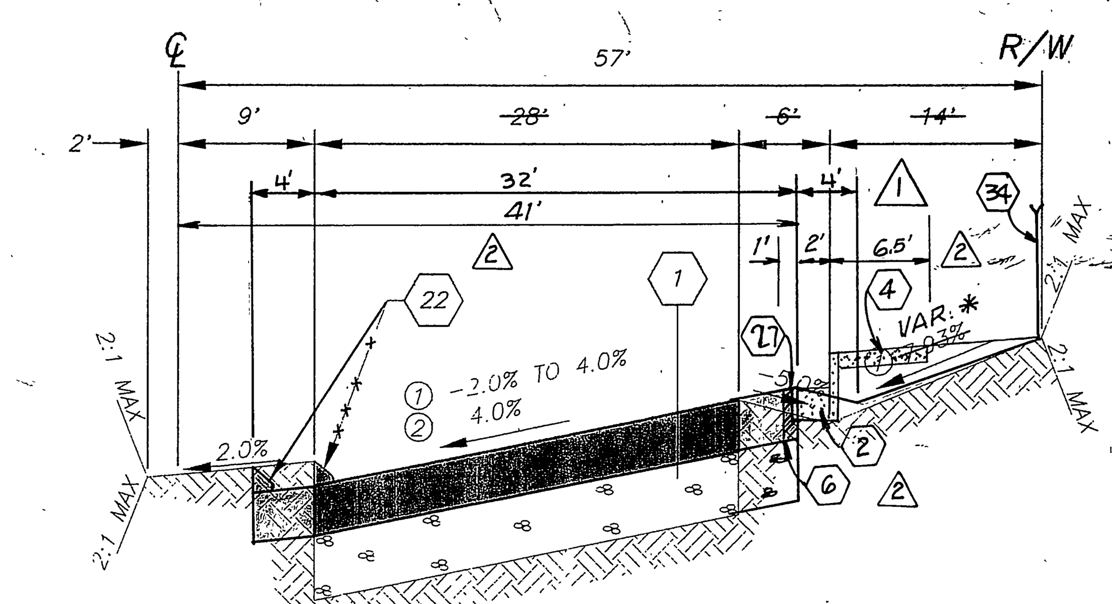


### TYPICAL SECTION

SCALE: HORIZ. 1"=10', VER. 1"=2'

① STA. 83+00 TO STA. 89+00
① STA. 117+00 TO STA. 121+00
② STA. 121+00 TO STA. 126+00
① STA. 126+00 TO STA. 130+01.6
T.I. = 8.5

### IMPORTANT NOTICE!

Section 4216/4217 of the Government Code requires a Dig Alert Identification Number to be issued before a "Permit to Excavate" will be valid. For your Dig Alert I.D. Number call Underground Service Alert
TOLL FREE 1-800-422-4133
Two working days berfore you dig.

### BENCHMARK

P.K. NAIL AND TAG IN BASE OF LIGHT STANDARD IN MEDIAN STRIP OF COUNTRY CLUB DRIVE 60' WEST OF ℄ OF CANYON CREST DRIVE.

ELEVATION 1068.06'

SEAL (2): REGISTERED PROFESSIONAL ENGINEER — TECK C LOH — No. 50293 — Exp. 6-30-01 — CIVIL — STATE OF CALIFORNIA

(2) CITY OF RIVERSIDE
PUBLIC UTILITIES DEPT. - ELECTRIC DEPT OVERHEAD & UNDERGROUND
John I Sevy 8-6-98
APPROVED BY / DATE

PREPARED UNDER THE DIRECTION OF: CANTY ENGINEERING GROUP, INC. (2) (3)
[signature]
TECK C. LOH
REGISTERED CIVIL ENGINEER NO. 50293
EXPRATION DATE: 6-30-01 DATE: 8/4/98

CITY OF RIVERSIDE
PARKS & RECREATION DEPT.
Robert Hofer 8/6/98
APPROVED / DATE

* AS BUILT CCD 7/7/94

SEAL: REGISTERED PROFESSIONAL ENGINEER — LAUREN FRED CALDWELL — CIVIL — STATE OF CALIFORNIA

ENGINEER IN RESPONSIBLE CHARGE
[signature]
LAUREN F. CALDWELL
R.C.E. No. 39441 expires 12/31/93
DATE 6/9/93

| MARK | REVISIONS | APPR. | DATE |
|---|---|---|---|
| (3) | ADDED PARK FENCE | RV2 | 5-6-02 |
| (2) | ADDED IMPROVEMENT PER TR25486-4 | [illegible] | 9-17-98 |
| (1) | ADDED BIKE LANE TO EACH SIDE | [initials] | 10/28/93 |

DESIGNED BY LARRY DRAWN BY LFH CHECKED BY [initials]

CITY OF RIVERSIDE, CALIFORNIA
PUBLIC WORKS DEPARTMENT

| APPROVED BY | BY | DATE |
|---|---|---|
| DEPUTY P W DIRECTOR | R.H.C. | 6/14/93 |
| PRINCIPAL ENGINEER | [initials] | 6/9/93 |
| CHIEF P W INSPECTOR | RZK | 6/17/93 |
| TRAFFIC DIVISION | [initials] | 6/6/93 |
| SURVEYOR | [initials] | 6/16/93 |
| STREET SERVICES | RL | 6/16/93 |

APPROVED BY [signature] PUBLIC WORKS DIRECTOR
DATE 7/1/93

CANYON CREST DRIVE FROM COUNTRY CLUB DRIVE TO VIA VISTA

HORIZ. SCALE: 1" = 20' VERT. SCALE: 1" = 4'

432 541500-440302 30325

R-3253A

SHEET 1 OF 6

FILE NO.

PC-3304 SA

INDEXED 7-29-94 LH

NOTE:
PROPOSED T.C. ELEV'S @ 43' RIGHT OF ℄ ARE EXIST. E.P. ELEV'S +0.37'

1080 EP TRANS
1080 EP@9' RT
1080 EP@37' RT *41'
1080 FG@R/W

1160 EP@9' RT
1160 EP@37' RT 41'
1160 FG@R/W

93+00 MATCH LINE SEE SHEET 3

PROPOSED EP TRANS.
PROPOSED FS@9' RT.
PROPOSED E.P. @37' RT *41'
PROPOSED EP @9' RT
PROPOSED GRADE @ R/W 57' RT.
EXISTING GRADE @ R/W
PROPOSED GRADE @ R/W 57' RT

100' VC PI=83.26
100' VC PI=83.63
100' VC PI=81.88
100' PI=95.60
100' VC PI=25.42'

VARIABLE THICKNESS AC OVERLAY
(CONSTRUCT ¼ CROWN FOR SUPER-ELEVATION TRANSITION)
OVERLAY WITH 0.10' A.C.

IDENTICAL POINT

EXIST. C & G AND MEDIAN CURB PER STREET PLAN No. R-1058-4

VARIABLE THICKNESS A.C. OVERLAY (MIN. 0.10' THICK)

4" WIDE SOLID DOUBLE YELLOW STRIPING (BY CITY FORCES)

FUTURE C & G

FUTURE MEDIAN CURB

PAVEMENT TRANSITION

FUTURE R/W

SLOPE EASEMENT

STORM DRAIN EASEMENT

NATURAL DRAINAGE COURSE

SOUTHERN CALIFORNIA GAS CO.

EX. 16" M.L. & C

SOLID 6" WHITE STRIPES (BY CITY FORCES)

TRACT BOUNDARY 82+97.00 AT 43° R/L MATCH EXIST.

NOT NEEDED BIKEWAY ADDED (BOTH SIDES)

REMOVE END OF

ROAD SIGN @ 78+50 ± INSTALL W74 SIGN ON EXISTING POST

REMOVE END OF PV'MT @81+90 ±

SIGN

30' S/W TRANSITION

EXIST. C.B. PER D-596

EXIST. S.D. PER D-596

PROPOSED STORM DRAIN IMPROVEMENTS PER D-609

STORM DRAIN EASEMENT

SLOPE EASEMENT

S.DRAIN EASEMENT

OPEN SPACE

SCALE: 1"=40'

TR 3439

CANYON CREST DRIVE

PREPARED UNDER THE DIRECTION OF CAULTY ENGINEERING GROUP, INC.

TECK C. LOH
REGISTERED CIVIL ENGINEER NO. 50693
EXPIRATION DATE: 6-30-01 DATE: 4-10-98

BENCHMARK

P.K. NAIL AND TAG IN BASE OF LIGHT STANDARD IN MEDIAN STRIP OF COUNTRY CLUB DRIVE 60' WEST OF ℄ OF CANYON CREST DRIVE.

ELEVATION 1068.06'

CURVE DATA

| No. | Δ | R | L | T |
|---|---|---|---|---|
| (1) | 13°09'25" | 1400.00' | 321.48' | 161.45' |
| (2) | 13°09'25" | 1409.00' | 323.55' | 162.49' |
| (3) | 13°09'25" | 1443.00' | 331.36' | 166.41' |
| (4) | 13°09'25" | 1457.00' | 334.57' | 168.03' |
| (5) | 05°41'47" | 1600.00' | 159.07' | 79.66' |
| (6) | 05°41'47" | 1591.00' | 158.18' | 79.15' |
| (7) | 05°41'47" | 1557.00' | 154.80' | 77.46' |
| (8) | 05°41'47" | 1543.00' | 153.41' | 76.77' |
| (9) | 15°12'15" | 1500.00' | 398.05' | 200.20' |
| (10) | 13°09'25" | 1437.00' | 329.98' | 165.72' |
| (11) | 05°41'47" | 1563.00' | 155.39' | 77.76' |

* AS BUILT CCD 7/7/94

CONSTRUCTION NOTES:

(1) CONSTRUCT 0.28'A.C. PAVEMENT OVER 0.88' AGGREGATE BASE.
(12) INSTALL F-1 DELINEATOR @ 20' O.C.
* (14) CONSTRUCT 3' PCC V-DITCH
(22) CONSTRUCT TYPE "E" A.C. DIKE PER CALTRANS STANDARD PLAN A87.
(23) INSTALL GUARD RAIL PER CITY OF RIVERSIDE STD. DWG. No. 650. EXCLUDE PAINTING & REFLECTOR REQUIREMENTS.
(25) REMOVE EXISTING TREES.
(26) CONSTRUCT A.C. OVERSIDE DRAIN PER CALTRANS STANDARD PLAN D87-B.
(27) ADJUST SEWER M.H. FRAME & COVER TO GRADE.
(28) ADJUST WATER GATE VALVE BOX TO GRADE.
(2) (4) CONST. CURB & GUTTER PER CITY OF R/V. STD. DWG. NO. 200 TYP I (G" CURB FACE)
CONST. P.C.C. CURB SIDEWALK PER CITY OF R/V. STD. DWG. No. 325.

CITY OF RIVERSIDE
PUBLIC UTILITIES DEPT.-ELECTRIC DEPT. OVERHEAD & UNDERGROUND
APPROVED BY: John L. Sway DATE 8-6-98

CITY OF RIVERSIDE
PLANNING DEPT.
APPROVED BY: Diane Jenkins DATE 8-17-98

CITY OF RIVERSIDE
PARKS & REC. DEPT.
APPROVED BY: Richard Fisher DATE 8/6/98

ENGINEER IN RESPONSIBLE CHARGE
LAUREN F. CALDWELL
R.C.E. No. 39441 expires 12/31/93
DATE 6/9/93

REGISTERED PROFESSIONAL ENGINEER LAUREN FRED CALDWELL No. 39441 CIVIL STATE OF CALIFORNIA

| MARK | REVISIONS | APPR. | DATE |
|---|---|---|---|
| 2 | ADDED IMPROVEMENTS PER TR25486-2 | CCD | 7-17-96 |

DESIGNED BY LARRY DRAWN BY CCD&Co CHECKED BY TL

CITY OF RIVERSIDE
PUBLIC WORKS DEPARTMENT

| | APPROVED BY | DATE |
|---|---|---|
| | PRINCIPAL ENGINEER | 6/9/93 |
| | DEPUTY PW. DIRECTOR | 6/9/93 |
| | TRAFFIC DIVISION | 6/16/93 |
| | CHIEF P.W. INSPECTOR | 6/11/93 |
| | STREET SERVICES | 6/11/93 |
| | SURVEYOR | 6/16/93 |

APPROVED BY
PUBLIC WORKS DIRECTOR
DATE 7/1/93

CANYON CREST DRIVE EXTENSION
FROM COUNTRY CLUB DR. TO VIA VISTA DR.
HORIZ. SCALE: 1"=40' VERT. SCALE: 1"=8'

ACCOUNT NUMBER: 432 541500 460302 30329
R-3253A
SHEET 2 OF 6

INDEXED 7-29-94

4-8-93

1170 EP@9' RT

1170 EP@37' RT *41'

1170 FG@R/W 57' RT

93+00 MATCH LINE SEE SHEET 2

PROPOSED EP @ 9' RT

PROPOSED EP 37' RT *41'

PROPOSED GRADE @ R/W 57' RT

EXISTING GRADE @ R/W

IDENTICAL POINT

⚠1 NOTE: PROPOSED T.C. ELEV'S @ 43' RIGHT OF ℄ ARE EXIST. E.P. ELEV'S + 0.3'

PROPOSED EP 9' RT

PROPOSED EP 37' RT 41' *

PROPOSED GRADE @ R/W 57' RT

EXISTING GRADE @ R/W

400'VC PI = 51.98

400' VC PI = 50.86

400' VC PI = 51.40

PROPOSED EP@9' RT

PROPOSED EP @37' RT *41'

PROPOSED GRADE @ R/W 57' RT

EXISTING GRADE @ R/W

104+50 MATCH LINE SEE SHEET 4

TAN = 6.00%

1260 EP@9' RT

TAN = 6.28%

1260 EP@37' RT *41'

TAN = 6.20%

1260 FG@R/W 57' RT

93 94 95 96 97 98 99 100 101 102 103 104

CITY OF RIVERSIDE ⚠3
PUBLIC UTILITIES DEPT. - ELECTRIC DEPT.
OVERHEAD & UNDERGROUND
John L Swy 8-6-98
APPROVED BY DATE

CITY OF RIVERSIDE ⚠2
PARKS & REC. DEPT.
Robert Colyer 08/06/98
APPROVED BY DATE

CITY OF RIVERSIDE ⚠2
PLANNING DEPT.
Diane Jenkins 8-17-98
APPROVED BY DATE

4" WIDE DOUBLE YELLOW SOLID STRIPING (BY CITY FORCES)

SLOPE EASEMENT

FUTURE R/W

FUTURE C & G

FUTURE MEDIAN CURB

93+00.00 MATCH LINE SEE SHEET 2

104+50.00 MATCH LINE SEE SHEET 4

END JSPEC ELEVATION TRANSITION

BEGIN JSPEC ELEVATION TRANSITION

100+50 END GUARD RAIL @ ℄

100+50 BEGIN GUARD RAIL @ ℄

SEE SHT 3A FOR CURB & GUTTER CONST.

PROPOSED FENCE PER PLANTING & FENCE PLAN

99+63 @ 90' RT. 17.0 ft

99+60 @ 152' RT. 99.0 ft

VARIABLE SLOPE 2% MIN

10'x 2.0'x 2' DEEP 1/4 TON GROUTED RIP-RAP

18'x 18'x 2' 1/4 TON GROUTED RIP-RAP

105+00 END DITCH 36.0 ft

SCALE: 1" = 40'

| CURVE DATA | | | | |
|---|---|---|---|---|
| No. | Δ | R | L | T |
| ① | 35°16'59" | 1600.00' | 985.29' | 508.83' |
| ② | 35°16'59" | 1591.00' | 979.75' | 505.96' |
| ③ | 35°16'59" | 1557.00' | 958.81' | 495.15' |
| ④ | 35°16'59" | 1543.00' | 950.19' | 490.70' |
| ⑤ | 35°16'59" | 1563.00' | 962.50' | 497.06' |

CITY OF RIVERSIDE WATER SYSTEM

APPROVED BY: DATE:

PROTECT IN-PLACE EXIST. ST. LIGHT

CONST. CURB & GUTTER PER CITY OF RIV. STD. DWG NO. 200 TYPE I (CURB FACE).

CONST. P.C.C. CURB SIDE WALK PER CITY OF RIV. STD. DWG. NO. 302

CANYON CREST DRIVE

SOUTHERN CALIFORNIA EDISON CO.

REVIEWED BY: DATE:

PREPARED UNDER THE DIRECTION OF: CIVILTY ENGINEERING GROUP, INC.

TECK C. LOH
REGISTERED CIVIL ENGINEER NO. 50293
EXPIRATION DATE: 6-30-01 DATE: 6/4/98

*AS BUILT CCD 7/7/94

CONSTRUCTION NOTES:

(1) CONSTRUCT 0.28' A.C. PAVEMENT OVER 0.88' AGGREGATE BASE.

(14) CONSTRUCT 3' P.C.C. V-DITCH. SEE DETAIL ON SHEET 1.

(16) CONSTRUCT 6' P.C.C. V-DITCH. SEE DETAIL ON SHEET 1.

(22) CONSTRUCT TYPE 'E' A.C. DIKE PER CALTRANS STANDARD PLAN A87.

(23) INSTALL GUARD RAIL PER CITY OF RIVERSIDE STD. DWG. NO. 650. EXCLUDE PAINTING & REFLECTOR REQUIREMENTS.

(26) CONSTRUCT A.C. OVERSIDE DRAIN PER CALTRANS STANDARD PLAN D87-B.

BENCHMARK

P.K. NAIL AND TAG IN BASE OF LIGHT STANDARD IN MEDIAN STRIP OF COUNTRY CLUB DRIVE 60' WEST OF ℄ OF CANYON CREST DRIVE.

ELEVATION 1068.06'

REGISTERED PROFESSIONAL ENGINEER TECK C. LOH No. 50293 EXP. 6-30-01 CIVIL STATE OF CALIFORNIA

REGISTERED PROFESSIONAL ENGINEER LAUREN FRED CALDWELL No. 39441 CIVIL STATE OF CALIFORNIA

ENGINEER IN RESPONSIBLE CHARGE

Lauren F. Caldwell

LAUREN F. CALDWELL
R.C.E. No. 39441 expires 12/31/93

DATE 6/9/93

| MARK | REVISIONS | APPR. | DATE |
|---|---|---|---|
| ⚠1 | ADDED IMPROVEMENTS PER TR 25486-1 | DH | 9-17-98 |

DESIGNED BY: LARRY DRAWN BY: CCD&Co CHECKED BY: TL

CITY OF RIVERSIDE
PUBLIC WORKS DEPARTMENT

| APPROVED BY | DATE | BY |
|---|---|---|
| PRINCIPAL ENGINEER | 6/19/94 | TL |
| DEPUTY P.W. DIRECTOR | 6/15/93 | RMG |
| TRAFFIC DIVISION | 6/16/93 | RC |
| CHIEF P. W. INSPECTOR | 6/10/93 | RSH |
| STREET SERVICES | 6/16/93 | RC |
| SURVEYOR | 6/16/93 | RDR |

APPROVED BY

PUBLIC WORKS DIRECTOR

DATE

CANYON CREST DRIVE EXTENSION
FROM COUNTRY CLUB DR. TO VIA VISTA DR.

HORIZ. SCALE: 1" = 40' VERT. SCALE: 1" = 8'

ACCOUNT NUMBER:
432 541500 440302 30525

R-3253A

SHEET 3 OF 6

4-8-93

PC-3304-SH

INDEXED 7-29-93 bdl

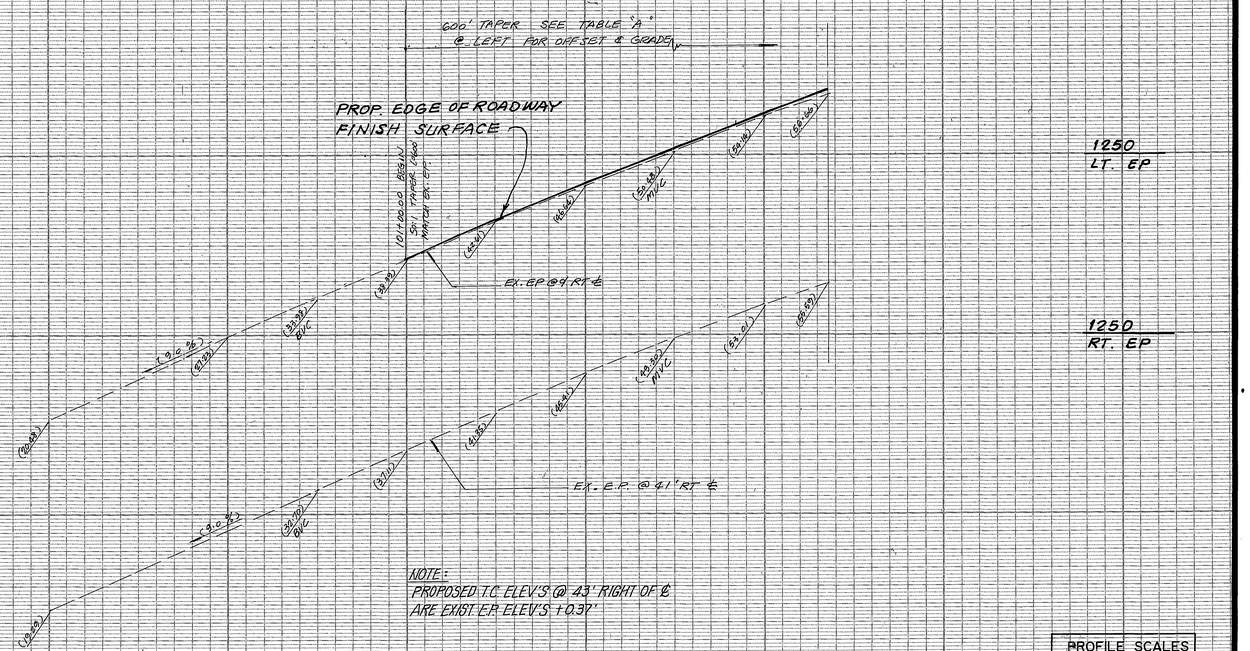


| TABLE A | | | |
|---|---|---|---|
| STATIONING | OFFSET | GRADE | REMARKS |
| 101 + 00 | 9.0 | (38.39) | BEG. TAPER |
| 101 + 50 | 8.0 | 42.65 | |
| 102 + 00 | 7.0 | 46.72 | |
| 102 + 50 | 6.0 | 50.59 | |
| 103 + 00 | 5.0 | 54.28 | |
| 103 + 50 | 4.0 | 57.78 | |
| 104 + 00 | 3.0 | 61.07 | |
| 104 + 50 | 2.0 | 64.17 | |
| 105 + 00 | 1.0 | 67.20 | |
| 105 + 50 | 0.0 | 70.22 | |
| 106 + 00 | -1.0 | 73.28 | |
| 106 + 50 | -2.0 | 76.34 | |
| 107 + 00 | -3.0 | 79.40 | END TAPER |

| TABLE B | | | |
|---|---|---|---|
| STATIONING | OFFSET | E.P. GRADE | REMARKS |
| 103 + 36.12 | 41.00 | (55.59) | BEG. TAPER |
| 103 + 50 | 41.27 | 56.54 | |
| 103 + 75 | 43.30 | 58.18 | |
| 104 + 00 | 46.06 | 59.76 | |
| 104 + 25 | 48.64 | 61.31 | |
| 104 + 50 | 49.95 | 62.85 | |
| 104 + 56.12 | 50.00 | 63.22 | END TAPER |

| TABLE "F" | | | |
|---|---|---|---|
| STA. | OFFSET | T.C. ELEV. | REMARKS |
| 103+36.12 | 43.00' | 55.96' | BEG. TAPPER |
| 103+50.00 | 43.18' | 56.91' | |
| 103+75.00 | 44.42' | 58.58' | |
| 103+76.12 | 44.50' | 58.65' | |
| 104+00.00 | 46.29' | 60.18' | |
| 104+16.12 | 47.50' | 61.20' | |
| 104+25.00 | 48.09' | 61.38' | |
| 104+50.00 | 48.96' | 63.30' | |
| 104+56.12 | 49.00' | 63.67 | END TAPER |

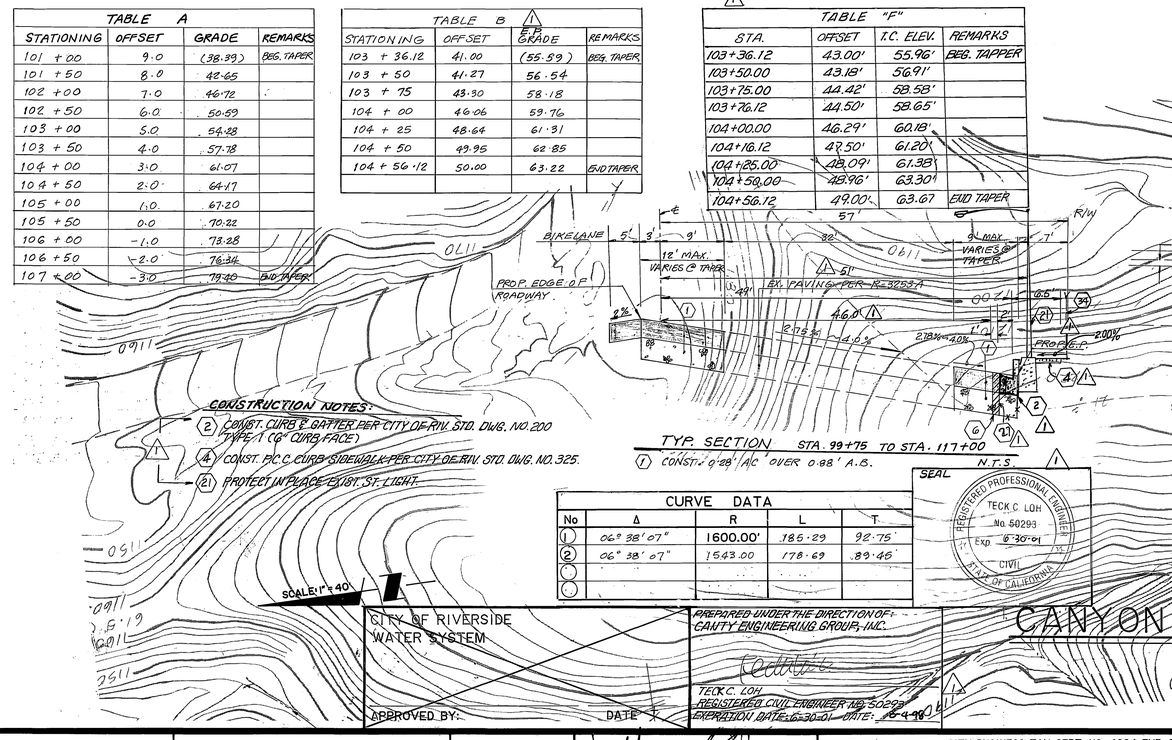


| CURVE DATA | | | | |
|---|---|---|---|---|
| No | Δ | R | L | T |
| (1) | 06° 38' 07" | 1600.00' | 186.29 | 92.75' |
| (2) | 06° 38' 07" | 1543.00 | 178.69 | 89.46' |
| ( ) | | | | |
| ( ) | | | | |

SEAL
REGISTERED PROFESSIONAL ENGINEER
TECK C. LOH
No. 50293
Exp. 6-30-01
CIVIL
STATE OF CALIFORNIA

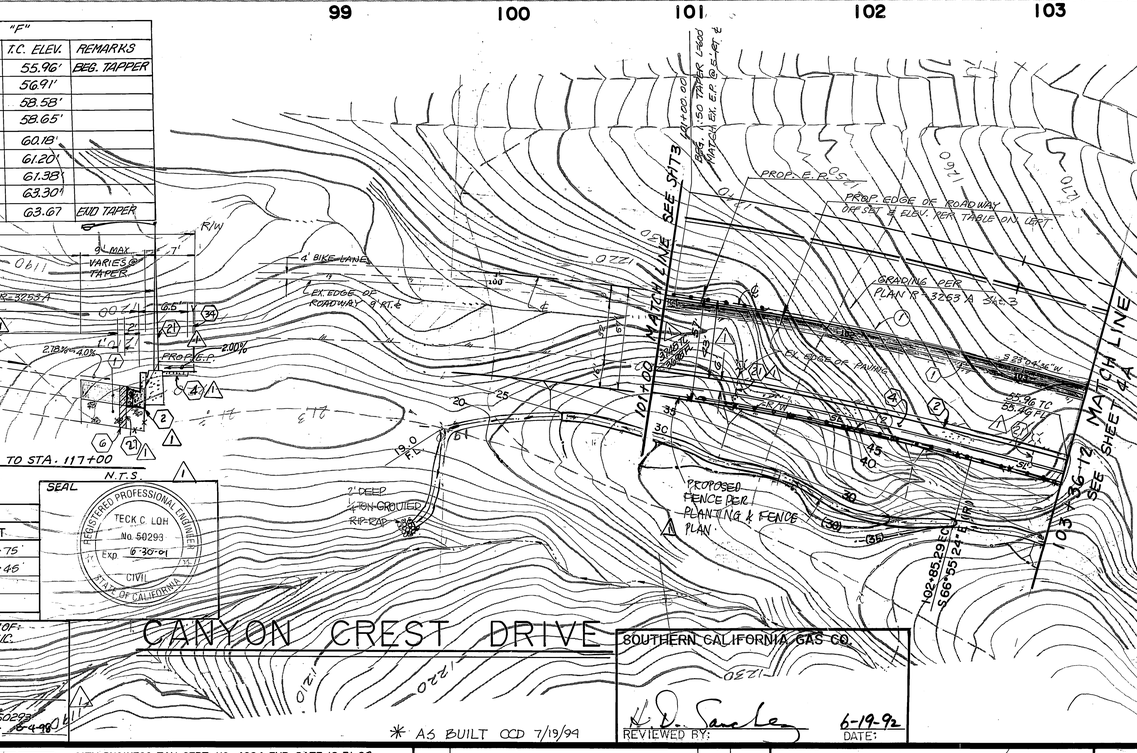


CITY OF RIVERSIDE
WATER SYSTEM
APPROVED BY: DATE

PREPARED UNDER THE DIRECTION OF:
CANTY ENGINEERING GROUP, INC.
TECK C. LOH
REGISTERED CIVIL ENGINEER NO. 50293
EXPIRATION DATE: 6-30-01 DATE: 8-4-98

* AS BUILT OCD 7/19/99

SOUTHERN CALIFORNIA GAS CO.
REVIEWED BY: K. D. Sanchez DATE: 6-19-98

CITY OF RIVERSIDE
PARKS & RECREATION DEPT.
APPROVED BY: DATE: 08/06/98

CITY OF RIVERSIDE
PLANNING DEPT.
APPROVED BY: DATE: 8/17/98

CITY OF RIVERSIDE
PUBLIC UTILITIES DEPT.-ELECTRIC DEPT.
OVERHEAD & UNDERGROUND
APPROVED BY: John J. Seery DATE: 8-6-98

**Underground Service Alert**
CALL BEFORE YOU DIG
Call: TOLL FREE
**1-800 422-4133**
TWO WORKING DAYS BEFORE YOU DIG

*PRIVATE ENGINEERING NOTE*

CONSTRUCTION CONTRACTOR AGREES THAT IN ACCORDANCE WITH GENERALLY ACCEPTED CONSTRUCTION PRACTICES, CONSTRUCTION CONTRACTOR WILL BE REQUIRED TO ASSUME SOLE AND COMPLETE RESPONSIBILITY FOR JOB SITE CONDITIONS DURING THE COURSE OF CONSTRUCTION OF THE PROJECT, INCLUDING SAFETY OF ALL PERSONS AND PROPERTY; THAT THIS REQUIREMENT SHALL BE MADE TO APPLY CONTINUOUSLY AND NOT BE LIMITED TO NORMAL WORKING HOURS, AND CONSTRUCTION CONTRACTOR FURTHER AGREES TO DEFEND, INDEMNIFY AND HOLD DESIGN PROFESSIONAL HARMLESS FROM ANY AND ALL LIABILITY, REAL OR ALLEGED, IN CONNECTION WITH THE PERFORMANCE OF WORK ON THIS PROJECT, EXCEPTING LIABILITY ARISING FROM THE SOLE NEGLIGENCE OF DESIGN PROFESSIONAL

REGISTERED PROFESSIONAL ENGINEER
JEFFREY D. BAND
No. 46212
CIVIL
STATE OF CALIFORNIA

PREPARED UNDER THE DIRECTION OF:
REGISTERED CIVIL ENGINEER NO. 46212
EXPIRATION DATE: 12-31-94 DATE: 2/19/92

SCALE: 1" = 40'
DATE: MARCH 1991

JFD
CITY BUSINESS TAX CERT. NO. 4994 EXP. DATE 12-31-93
**J.F. Davidson Associates, Inc.**
ENGINEERING PLANNING SURVEYING ARCHITECTURE LANDSCAPE ARCHITECTURE
3880 Lemon Street, Suite 300, P.O. Box 493, Riverside, CA 92502, (714) 686-0844, FAX 714-686-5954
11200 S. Mt. Vernon Ave., Suite "D", Colton, CA 92324, (714) 825-1082
73-080 El Paseo, Suite 106, Palm Desert, CA 92260, (619) 346-5691, FAX 619-340-0529

BENCH MARK: **P.K. NAIL & TAG IN BASE OF LIGHT STANDARD IN MEDIAN STRIP OF COUNTRY CLUB DRIVE 60' WEST OF C/L CANYON CREST DRIVE. ELEV. = 1058.06**

| MARK | REVISIONS | APPR. | DATE |
|---|---|---|---|
| 1 | ADDED IMPROVEMENT PER TR 25486-4 | JDS | 9-17-98 |

DESIGNED BY: DRAWN BY: C.M.F. CHECKED BY: J.D.S. EARP

CITY OF RIVERSIDE, CALIFORNIA
DEPARTMENT OF PUBLIC WORKS

| APPROVED BY | BY | DATE |
|---|---|---|
| PRINCIPAL ENGINEER | | 12/1/92 |
| PARK DEPARTMENT | | 6/22/93 |
| TRAFFIC DIVISION | | 12/1/93 |
| CHIEF P. W. ENGR. | | 12/4/98 |
| ~~PLANNING~~ | | ~~12/1/93~~ |

APPROVED BY: DIRECTOR OF PUBLIC WORKS
DATE: 12-14-98

TRACT 25486
**CANYON CREST DRIVE**
**STREET IMPROVEMENT PLANS**
**PLAN & PROFILE**
STA. 101+00 TO STA. 103+36.12
FOR: CHRISTIAN BERGUM & ASSOCIATES

PROJECT NO.: R-3253 A
SHEET 3A OF 6
FILE NO.: 8911565

INDEXED 7-29-99 KH

PC 350-V-4

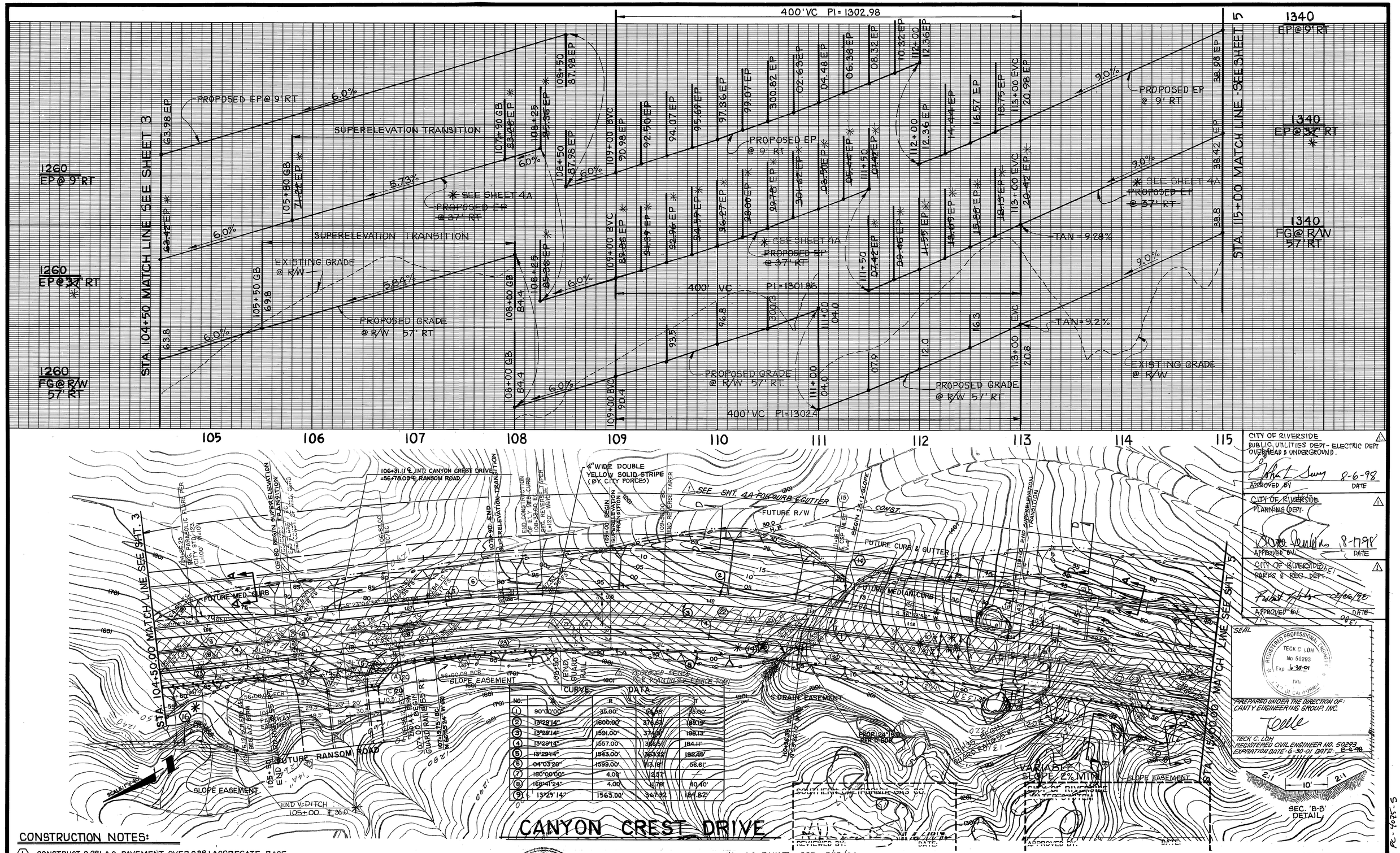





| CURVE DATA | | | | |
|---|---|---|---|---|
| NO. | Δ | R | L | T |
| (1) | 90°00'00" | 35.00' | 54.98' | 35.00' |
| (2) | 13°28'14" | 1600.00' | 376.53' | 189.19' |
| (3) | 13°29'14" | 1591.00' | 374.61' | 188.13' |
| (4) | 13°29'14" | 1557.00' | 366.61' | 184.11' |
| (5) | 13°29'14" | 1543.00' | 363.31' | 182.45' |
| (6) | 04°03'20" | 1599.00' | 113.16' | 56.61' |
| (7) | 180°00'00" | 4.00' | 12.57' | |
| (8) | 168°41'24" | 4.00' | 11.78' | 40.40' |
| (9) | 13°29'14" | 1563.00' | 367.92' | 184.82' |

## CONSTRUCTION NOTES:

(1) CONSTRUCT 0.28' A.C. PAVEMENT OVER 0.88' AGGREGATE BASE.
(14) CONSTRUCT 3' P.C.C. "V"-DITCH. SEE DETAIL, SHEET 1.
(16) CONSTRUCT 6' P.C.C. "V"-DITCH. SEE DETAIL, SHEET 1.
(22) CONSTRUCT TYPE 'E' A.C. DIKE PER CALTRANS STANDARD PLAN A87.
(23) INSTALL GUARD RAIL PER CITY OF RIVERSIDE STD. DWG. NO. 650. EXCLUDE PAINTING & REFLECTOR REQUIREMENTS.
(26) CONSTRUCT A.C. OVERSIDE DRAIN PER CALTRANS STANDARD PLAN D87-B

**BENCHMARK**
P.K. NAIL AND TAG IN BASE OF LIGHT STANDARD IN MEDIAN STRIP OF COUNTRY CLUB DRIVE 60' WEST OF ℄ OF CANYON CREST DRIVE.
ELEVATION 1068.06'

REGISTERED PROFESSIONAL ENGINEER LAUREN FRED CALDWELL No. 39441 CIVIL STATE OF CALIFORNIA

ENGINEER IN RESPONSIBLE CHARGE
LAUREN F. CALDWELL
R.C.E. No. 39441 expires 12/31/93
DATE 6/9/93

| MARK | REVISIONS | APPR. | DATE |
|---|---|---|---|
| 1 | ADDED IMPROVEMENTS PER TR 25486 | RJC | 9-1-94 |

DESIGNED BY LARRY DRAWN BY CCD & CO. CHECKED BY SF

| APPROVED BY | DATE | BY |
|---|---|---|
| PRINCIPAL ENGINEER | 6/9/93 | SF |
| DEPUTY PW DIRECTOR | 6/10/93 | EMC |
| TRAFFIC DIVISION | 6/14/93 | JS |
| CHIEF P.W. INSPECTOR | 6/10/93 | FEK |
| STREET SERVICES | 6/16/93 | RM |
| SURVEYOR | 6/14/93 | RDM |

CITY OF RIVERSIDE
PUBLIC WORKS DEPARTMENT
APPROVED BY
PUBLIC WORKS DIRECTOR
DATE 7/1/93

CITY OF RIVERSIDE
PUBLIC UTILITIES DEPT- ELECTRIC DEPT
OVERHEAD & UNDERGROUND.
APPROVED BY DATE 8-6-98

CITY OF RIVERSIDE
PLANNING DEPT.
APPROVED BY DATE 8-7-98

CITY OF RIVERSIDE
PARKS & REC. DEPT.
APPROVED BY DATE 8/6/98

SEAL
REGISTERED PROFESSIONAL ENGINEER TECK C. LOH No. 50293 Exp. 6-30-01 IVIL STATE OF CALIFORNIA

PREPARED UNDER THE DIRECTION OF:
CANTY ENGINEERING GROUP, INC.

TECK C. LOH
REGISTERED CIVIL ENGINEER NO. 50293
EXPIRATION DATE: 6-30-01 DATE: 8-6-98

# CANYON CREST DRIVE EXTENSION
## FROM COUNTRY CLUB DR. TO VIA VISTA DR.

HORIZ. SCALE: 1"=40' VERT. SCALE: 1"=8'

ACCOUNT NUMBER: 492 541500 440502 30325

R-3253A

SHEET 4 OF 6

* AS BUILT CCD 7/18/94

4-8-93

PC-3304-5Y & PC-4035-5

INDEXED 7-29-94 GH

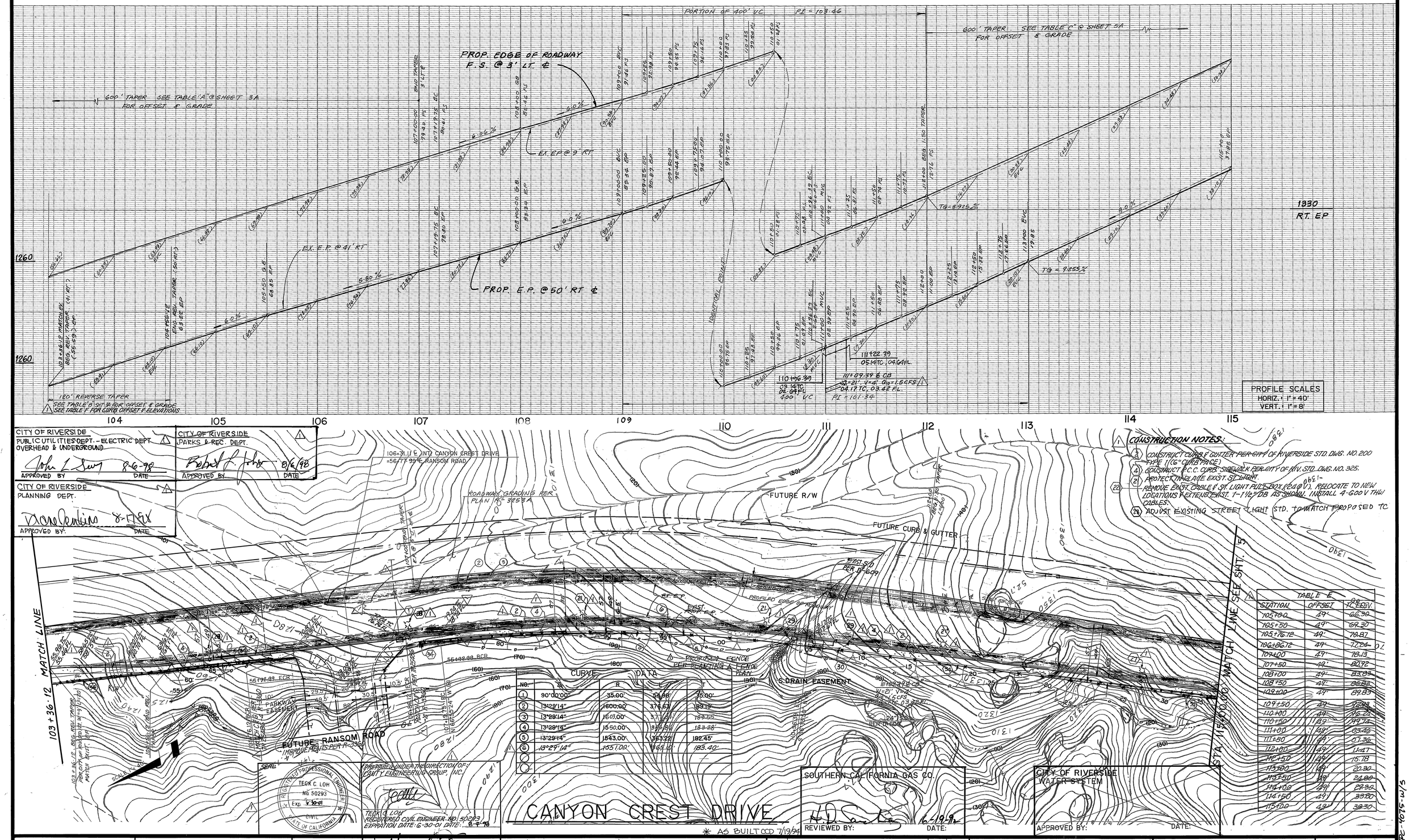
PORTION OF 400' VC
PI = 103.46
PROP. EDGE OF ROADWAY F.S. @ 3' LT. ℄
600' TAPER SEE TABLE "A" @ SHEET 3A FOR OFFSET & GRADE
600' TAPER SEE TABLE "C" @ SHEET 5A FOR OFFSET & GRADE
EX. EP @ 9' RT
EX. E.P. @ 41' RT
PROP. E.P. @ 50' RT ℄
1330 RT. EP
1260
180' REVERSE TAPER
SEE TABLE B (SHT 3A) FOR OFFSET & GRADE
SEE TABLE F FOR CURB OFFSET & ELEVATIONS
PROFILE SCALES
HORIZ.: 1" = 40'
VERT.: 1" = 8'
104
105
106
107
108
109
110
111
112
113
114
115
CITY OF RIVERSIDE
PUBLIC UTILITIES DEPT. - ELECTRIC DEPT.
OVERHEAD & UNDERGROUND
APPROVED BY
DATE
CITY OF RIVERSIDE
PARKS & REC. DEPT.
APPROVED BY
DATE
CITY OF RIVERSIDE
PLANNING DEPT.
APPROVED BY:
DATE
106+31.11 & INT. CANYON CREST DRIVE
=56/77.99 E. RANSOM ROAD
ROADWAY GRADING PER PLAN 18-3858A
FUTURE R/W
FUTURE CURB & GUTTER
EXIST S.D. PER R-6099
PROPOSED FENCE PER PLANTING & FENCE PLAN
S. DRAIN EASEMENT
PARKWAY EASEMENT
FUTURE RANSOM ROAD IMPROVEMENTS PER R-3360
103 + 36.12 MATCH LINE
STA. 115+00.00 MATCH LINE SEE SHT. 5A
CANYON CREST DRIVE
SOUTHERN CALIFORNIA GAS CO.
REVIEWED BY:
DATE:
CITY OF RIVERSIDE WATER SYSTEM
APPROVED BY:
DATE:
CONSTRUCTION NOTES:
1. CONSTRUCT CURB & GUTTER PER CITY OF RIVERSIDE STD. DWG. NO. 200 TYPE II (6" CURB FACE)
4. CONSTRUCT P.C.C. CURB SIDEWALK PER CITY OF RIV. STD. DWG. NO. 325.
21. PROTECT IN PLACE EXIST. ST. LIGHT.
22. REMOVE EXIST. CABLE & ST. LIGHT PULL BOX (12" Ø V.). RELOCATE TO NEW LOCATIONS & EXTEND EXIST. 1-1½" C/DB AS SHOWN. INSTALL 4-600 V THW CABLES.
29. ADJUST EXISTING STREET LIGHT STD. TO MATCH PROPOSED TC
CURVE DATA
TABLE E
STATION OFFSET TC ELEV.
105+00.0 49' 66.30
105+50 49' 69.20
105+76.12 49' 70.87
106+86.12 49' 77.24
107+00 49' 78.13
107+50 49' 80.92
108+00 49' 83.83
108+50 49' 86.88
109+00 49' 89.85
109+50 49' 92.89
110+00 49' 96.26
110+50 49' 99.72
111+00 49' 93.46
111+50 49' 97.36
112+00 49' 1.41
112+50 49' 15.18
113+00 49' 20.30
113+50 49' 24.80
114+00 49' 29.30
114+50 49' 33.80
115+00 49' 38.30
PREPARED UNDER THE DIRECTION OF: COUNTY ENGINEERING GROUP, INC.
TEDD C. LOH
REGISTERED CIVIL ENGINEER NO. 50293
EXPIRATION DATE: 6-30-01
DATE: 8-4-98
SEAL
REGISTERED PROFESSIONAL ENGINEER TEDD C LOH No. 50293 Exp. 6-30-01 CIVIL STATE OF CALIFORNIA
REGISTERED PROFESSIONAL ENGINEER JEFFREY D. SMITH No. 46212 CIVIL STATE OF CALIFORNIA
Underground Service Alert
DIG BEFORE YOU DIG
Call: TOLL FREE
1-800
422-4133
TWO WORKING DAYS BEFORE YOU DIG
PRIVATE ENGINEERING NOTE
CONSTRUCTION CONTRACTOR AGREES THAT IN ACCORDANCE WITH GENERALLY ACCEPTED CONSTRUCTION PRACTICES, CONSTRUCTION CONTRACTOR WILL BE REQUIRED TO ASSUME SOLE AND COMPLETE RESPONSIBILITY FOR JOB SITE CONDITIONS DURING THE COURSE OF CONSTRUCTION OF THE PROJECT, INCLUDING SAFETY OF ALL PERSONS AND PROPERTY; THAT THIS REQUIREMENT SHALL BE MADE TO APPLY CONTINUOUSLY AND NOT BE LIMITED TO NORMAL WORKING HOURS, AND CONSTRUCTION CONTRACTOR FURTHER AGREES TO DEFEND, INDEMNIFY AND HOLD DESIGN PROFESSIONAL HARMLESS FROM ANY AND ALL LIABILITY, REAL OR ALLEGED, IN CONNECTION WITH THE PERFORMANCE OF WORK ON THIS PROJECT, EXCEPTING LIABILITY ARISING FROM THE SOLE NEGLIGENCE OF DESIGN PROFESSIONAL.
PREPARED UNDER THE DIRECTION OF:
REGISTERED CIVIL ENGINEER NO. 46212
EXPIRATION DATE: 12-31-94
DATE: 7/19/91
SCALE: 1" = 40'
DATE: MAR. 1991
JFD
CITY BUSINESS TAX CERT. NO. 4994 EXP. DATE 12-31-93
J.F. Davidson Associates, Inc.
ENGINEERING PLANNING SURVEYING ARCHITECTURE LANDSCAPE ARCHITECTURE
3880 Lemon Street, Suite 300, P.O. Box 493, Riverside, CA 92502, (714) 685-0844, FAX 714-686-5954
11200 S. Mt. Vernon Ave., Suite "D", Colton, CA 92324, (714) 825-1082
73-080 El Paseo, Suite 106, Palm Desert, CA 92260, (619) 346-5691, FAX 619-340-0529
BENCH MARK: P.K. NAIL & TAG IN BASE OF LIGHT STANDARD IN MEDIAN STRIP OF COUNTRY CLUB DRIVE 60' WEST OF C/L CANYON CREST DRIVE. ELEV. = 1068.06
MARK REVISIONS APPR. DATE
1 ADDED IMPROVEMENTS PER TR25286-4 FDD 9-17-98
DESIGNED BY _____ DRAWN BY POOL CHECKED BY J.D.S.
CITY OF RIVERSIDE, CALIFORNIA
DEPARTMENT OF PUBLIC WORKS
APPROVED BY / BY / DATE
PRINCIPAL ENGINEER
PARK DEPARTMENT
TRAFFIC DIVISION
CHIEF P. W. ENGR.
PLANNING
APPROVED BY
DIRECTOR OF PUBLIC WORKS
DATE 12.3.98
TRACT 25486
CANYON CREST DRIVE
STREET IMPROVEMENT PLANS
PLAN & PROFILE
STA. 103+36.12 TO STA. 115+00.00
FOR: CHRISTIAN BERGUM & ASSOCIATES
PROJECT NO. R-3253 A
SHEET 4A OF 6
FILE NO.: 8911565
R-3364-94 # R2-4015-WS
INDEXED 7-22-99 GH

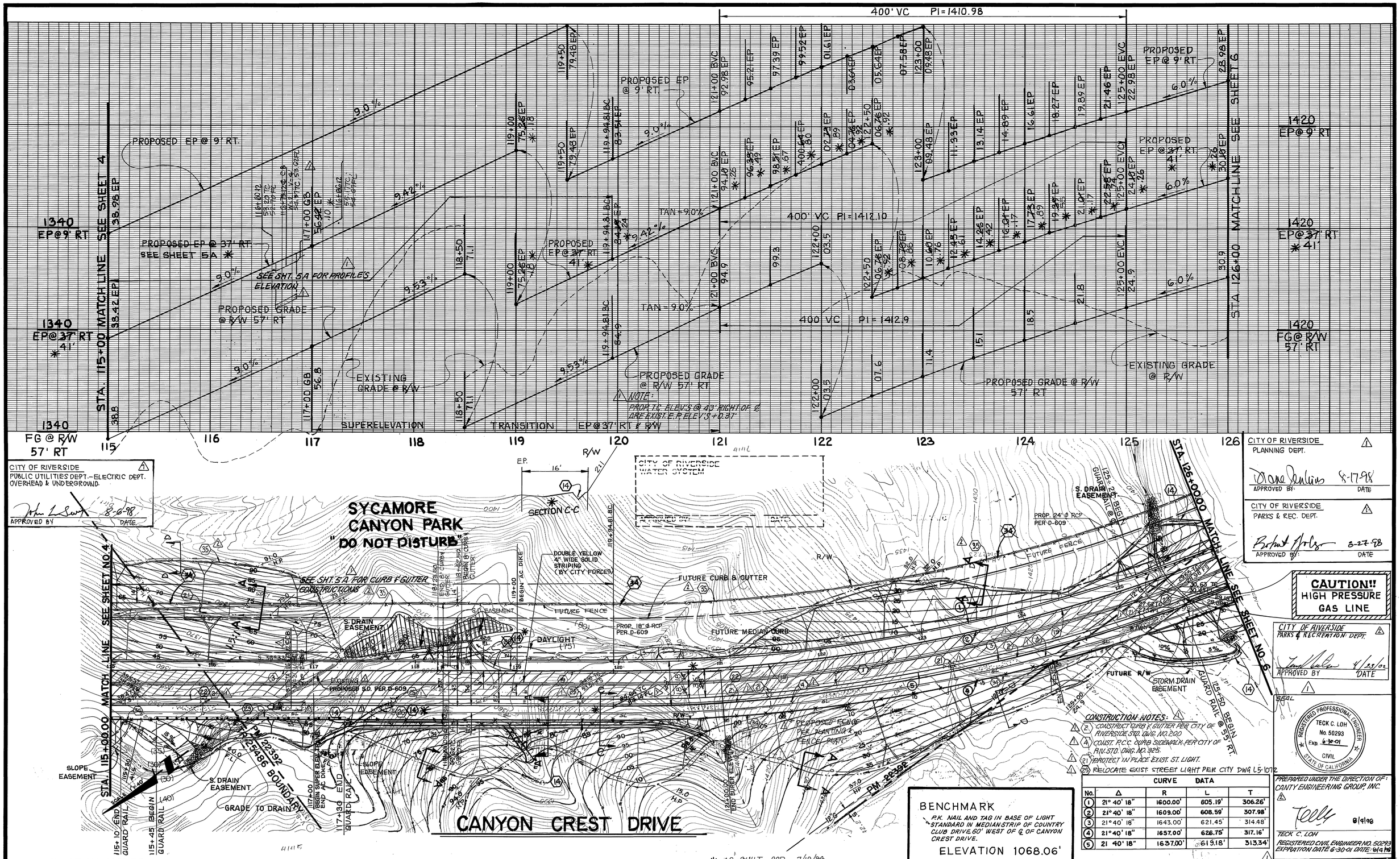





## CONSTRUCTION NOTES:

1. CONSTRUCT 0.28' AC. PAVEMENT OVER 0.88' AGGREGATE BASE.
14. CONSTRUCT 3' P.C.C. V-DITCH. SEE DETAIL ON SHEET 1.
22. CONSTRUCT TYPE "E" AC. DIKE PER CALTRANS STANDARD PLAN A87.
23. INSTALL GUARD RAIL PER CITY OF RIVERSIDE STD. DWG. NO. 650 EXCLUDE PAINTING & REFLECTOR REQUIREMENTS.
26. CONSTRUCT A.C. OVERSIDE DRAIN PER CALTRANS STANDARD PLAN D87-B.
2 35. INSTALL PARK FENCE PER DETAIL ON SHEET 1.

## CONSTRUCTION NOTES:

2. CONSTRUCT CURB & GUTTER PER CITY OF RIVERSIDE STD. DWG. NO. 200
4. CONST. P.C.C. CURB SIDEWALK PER CITY OF RIV. STD. DWG. NO. 925.
21. PROTECT IN PLACE EXIST. ST. LIGHT.
25. RELOCATE EXIST. STREET LIGHT PER CITY DWG L-5-1072

| No. | CURVE DATA Δ | R | L | T |
|---|---|---|---|---|
| 1 | 21° 40' 18" | 1600.00' | 605.19' | 306.26' |
| 2 | 21° 40' 18" | 1609.00' | 608.59' | 307.98' |
| 3 | 21° 40' 18" | 1643.00' | 621.45' | 314.48' |
| 4 | 21° 40' 18" | 1657.00' | 626.75' | 317.16' |
| 5 | 21 40' 18" | 1637.00' | 619.18' | 313.34' |

BENCHMARK
P.K. NAIL AND TAG IN BASE OF LIGHT STANDARD IN MEDIAN STRIP OF COUNTRY CLUB DRIVE, 60' WEST OF ℄ OF CANYON CREST DRIVE.
ELEVATION 1068.06'

CITY OF RIVERSIDE PUBLIC UTILITIES DEPT.- ELECTRIC DEPT. OVERHEAD & UNDERGROUND.
APPROVED BY DATE 8-6-98

PREPARED UNDER THE DIRECTION OF: CANTY ENGINEERING GROUP, INC.
TECK C. LOH
REGISTERED CIVIL ENGINEER NO. 50293
EXPIRATION DATE 6-30-01 DATE: 6/9/98

REGISTERED PROFESSIONAL ENGINEER TECK C. LOH No. 50293 Exp. 6-30-01 CIVIL STATE OF CALIFORNIA

REGISTERED PROFESSIONAL ENGINEER LAUREN FRED CALDWELL No. 39441 CIVIL STATE OF CALIFORNIA

ENGINEER IN RESPONSIBLE CHARGE
LAUREN F. CALDWELL
R.C.E. No. 39441 expires 12/31/93
DATE 6/9/93

| MARK | REVISIONS | APPR. | DATE |
|---|---|---|---|
| 2 | ADDED PARK FENCE | JWZ | 6-6-98 |
| 1 | ADDED IMPROVEMENTS PER TR.25486 BOUNDARY | JWZ | 6-17-98 |

DESIGNED BY LARRY DRAWN BY CCD&Co CHECKED BY

| APPROVED BY | DATE | BY |
|---|---|---|
| PRINCIPAL ENGINEER | 6/9/93 | RL |
| DEPUTY P.W. DIRECTOR | 6/14/93 | MMC |
| TRAFFIC DIVISION | 6/16/93 | RS |
| CHIEF P. W. INSPECTOR | 6/17/93 | RRE |
| STREET SERVICES | 6/16/93 | RM |
| SURVEYOR | 6/16/93 | JWZ |

# CITY OF RIVERSIDE
## PUBLIC WORKS DEPARTMENT

APPROVED BY
PUBLIC WORKS DIRECTOR
DATE 7/1/93

# CANYON CREST DRIVE EXTENSION
## FROM COUNTRY CLUB DR. TO VIA VISTA DR.

HORIZ. SCALE: 1"=40' VERT. SCALE: 1"=8'

ACCOUNT NUMBER: 432 541500 44902 30525

R-3253A

SHEET 5 OF 6

AS BUILT CCD 7/19/94

4-8-93

INDEXED 7-29-94 GH

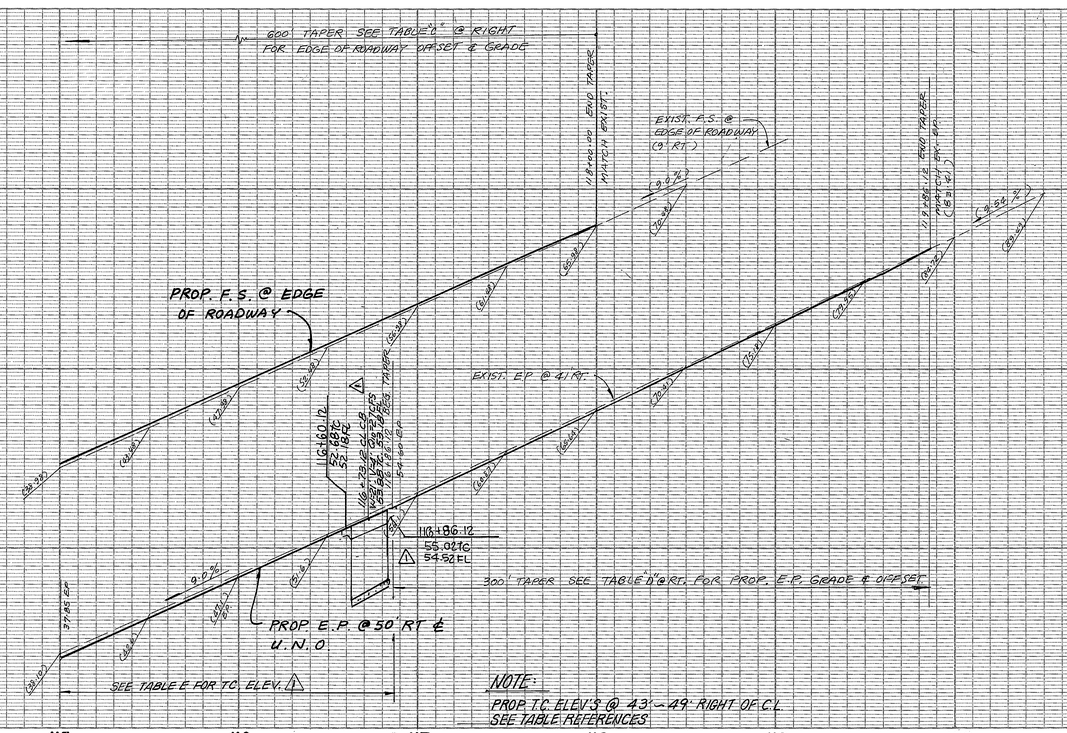


PROFILE SCALES
HORIZ.: 1" = 40'
VERT.: 1" = 8'

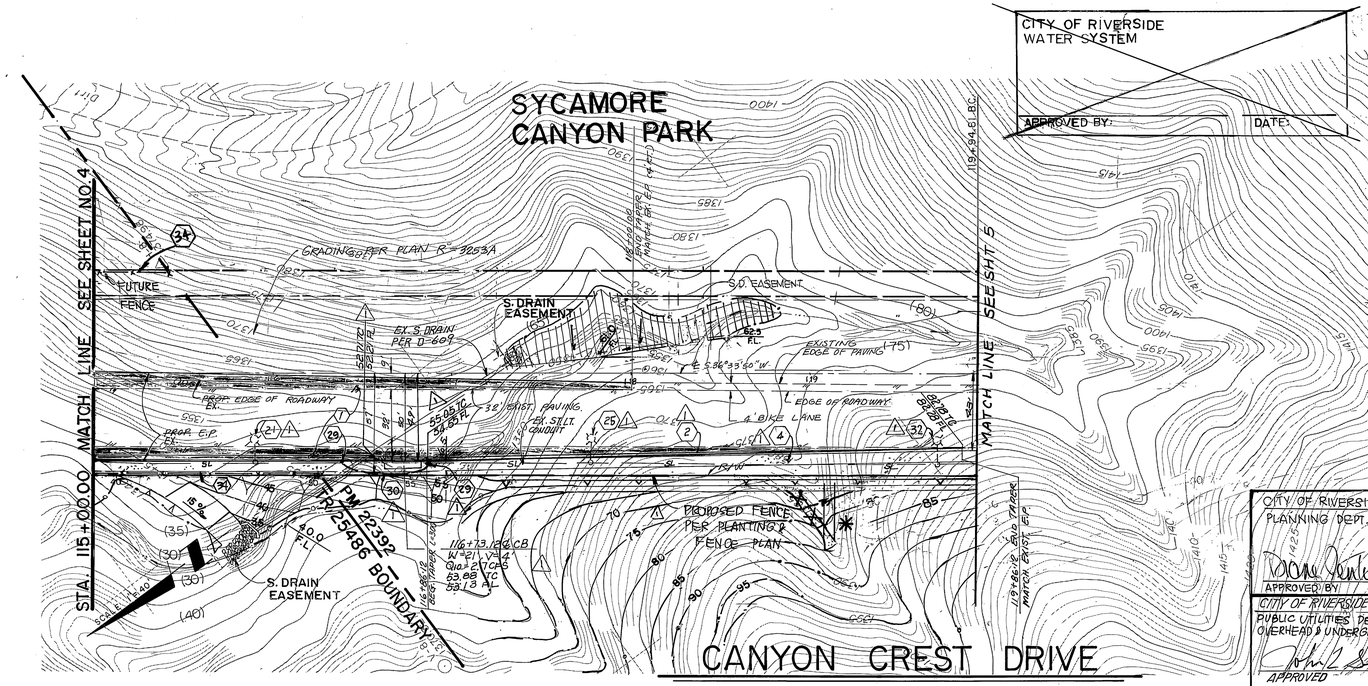


TABLE C

| STATION | OFFSET | GRADE | REMARKS |
|---|---|---|---|
| N2 +00 | -8.0 | 12.76 | BEG. TAPER |
| 112 +25 | -12.5 | 16.80 | |
| 112 +50 | -12.0 | 15.90 | |
| 112 +75 | -11.5 | 19.03 | |
| 113 +00 | -10.0 | 21.26 | |
| 113 +50 | 0.0 | 25.73 | |
| 114 +00 | 1.0 | 30.20 | |
| 114 +50 | 2.0 | 34.67 | |
| 115 +00 | 3.0 | 39.15 | |
| 115 +50 | 4.0 | 43.62 | |
| 116 +00 | 5.0 | 48.09 | |
| 116 +50 | 6.0 | 52.56 | |
| 117 +00 | 7.0 | 57.04 | |
| 117 +50 | 8.0 | 61.50 | |
| 118 +00 | 9.0 | (65.98) | END TAPER |

TABLE D

| STATION | OFFSET | GRADE | REMARKS | ⚠ TC OFFSET | ⚠ TC ELEV. |
|---|---|---|---|---|---|
| 116 + 86.12 | 50.00 | 54.60 | BEG. TAPER | 49.00' | 55.05 |
| 117 + 00 | 48.58 | 55.86 | | 48.72' | 56.31 |
| 117 + 50 | 48.08 | 60.75 | | 47.72' | 61.79 |
| 118 + 00 | 46.58 | 65.58 | | 46.72' | 65.97 |
| 118 + 50 | 45.08 | 70.40 | | 45.72' | 70.77 |
| 119 + 00 | 43.58 | 75.20 | | 44.72' | 75.55 |
| 119 + 50 | 42.08 | 79.97 | | 43.72' | 80.33 |
| 119 + 86.12 | 41.00 | (83.41) | END TAPER | 43.00' | 83.78 |

TABLE E

| STATION | OFFSET | TC. ELEV |
|---|---|---|
| 115+00 | 49' | 38.30 |
| 115+50 | 49' | 42.80 |
| 116+00 | 49' | 47.30 |
| 116+50 | 49' | 51.80 |

**CONSTRUCTION NOTES**

⚠ (2) CONSTRUCT CURB & GUTTER PER CITY OF RIVERSIDE STD. DWG. NO. 200 TYPE I (6" CURB FACE)
⚠ (4) CONSTRUCT P.C.C. CURB SIDEWALK PER CITY OF RIV. STD. DWG. NO. 325.
⚠ (21) PROTECT IN PLACE EXIST. ST. LIGHT.
⚠ (22) REMOVE EXIST. CABLE & ST. LIGHT PULL BOX (240 V.). RELOCATE TO NEW LOCATIONS & EXTEND EXIST. 1-1½" DB AS SHOWN. INSTALL 2-600 V THW CABLES
⚠ (23) INSTALL 1½" ST. LIGHT CONDUIT AND 4 #4 AL CU 600V THW CABLES
⚠ (25) RELOCATE EXIST. STREET LIGHT PER CITY OF RIV. DWG. 15-1072

CITY OF RIVERSIDE PLANNING DEPT. ⚠
APPROVED BY: [signature] DATE: 8-17-98

CITY OF RIVERSIDE PARKS & REC DEPT. ⚠
APPROVED BY: [signature] DATE: 3/27/98

CITY OF RIVERSIDE PUBLIC UTILITIES DEPT- ELECTRIC DEPT. OVERHEAD & UNDERGROUND. ⚠
APPROVED: [signature] DATE: 8-6-98

SOUTHERN CALIFORNIA GAS CO. ⚠
REVIEWED BY: [signature] DATE: 6-19-98

✱ AS BUILT CCD 7/19/94

SEAL ⚠
REGISTERED PROFESSIONAL ENGINEER — TECK C. LOH — No. 50293 — Exp. 6-30-01 — CIVIL — STATE OF CALIFORNIA

PREPARED UNDER THE DIRECTION OF: CANTY ENGINEERING GROUP, INC. ⚠
[signature]
TECK C. LOH
REGISTERED CIVIL ENGINEER NO. 50293
EXPIRATION DATE: 6-30-01 DATE: 8-6-98

**Underground Service Alert**
DIG ALERT
Call: TOLL FREE
1-800
422-4133
TWO WORKING DAYS BEFORE YOU DIG

*PRIVATE ENGINEERING NOTE*

CONSTRUCTION CONTRACTOR AGREES THAT IN ACCORDANCE WITH GENERALLY ACCEPTED CONSTRUCTION PRACTICES, CONSTRUCTION CONTRACTOR WILL BE REQUIRED TO ASSUME SOLE AND COMPLETE RESPONSIBILITY FOR JOB SITE CONDITIONS DURING THE COURSE OF CONSTRUCTION OF THE PROJECT, INCLUDING SAFETY OF ALL PERSONS AND PROPERTY; THAT THIS REQUIREMENT SHALL BE MADE TO APPLY CONTINUOUSLY AND NOT BE LIMITED TO NORMAL WORKING HOURS, AND CONSTRUCTION CONTRACTOR FURTHER AGREES TO DEFEND, INDEMNIFY AND HOLD DESIGN PROFESSIONAL HARMLESS FROM ANY AND ALL LIABILITY, REAL OR ALLEGED, IN CONNECTION WITH THE PERFORMANCE OF WORK ON THIS PROJECT, EXCEPTING LIABILITY ARISING FROM THE SOLE NEGLIGENCE OF DESIGN PROFESSIONAL.

REGISTERED PROFESSIONAL ENGINEER — No. 41828 — CIVIL — STATE OF CALIFORNIA

PREPARED UNDER THE DIRECTION OF:
[signature]
REGISTERED CIVIL ENGINEER NO. 46212
EXPIRATION DATE: 12-31-93 DATE: 2/19/91

JFD
CITY BUSINESS TAX CERT. NO. 4994 EXP. DATE 12-31-93
**J.F. Davidson Associates, Inc.**
ENGINEERING PLANNING SURVEYING ARCHITECTURE LANDSCAPE ARCHITECTURE
■ 3880 Lemon Street, Suite 300, P.O. Box 493, Riverside, CA 92502, (714) 686-0844, FAX 714-686-5954
11200 S. Mt. Vernon Ave., Suite "D", Colton, CA 92324, (714) 825-1082
73-080 El Paseo, Suite 106, Palm Desert, CA 92260, (619) 346-5691, FAX 619-340-0529

SCALE: 1" = 40'
DATE: MARCH 1991

BENCH MARK: **P.K. NAIL & TAG IN BASE OF LIGHT STANDARD IN MEDIAN STRIP OF COUNTRY CLUB DRIVE 60' WEST OF C/L CANYON CREST DRIVE. ELEV. = 1068.06**

| MARK | REVISIONS | APPR | DATE |
|---|---|---|---|
| ⚠ | ADDED IMPROVEMENTS PER TR25486 | RNC | 9-17-98 |

DESIGNED BY _____ DRAWN BY POOL CHECKED BY J.D.S. LARA

CITY OF RIVERSIDE, CALIFORNIA
DEPARTMENT OF PUBLIC WORKS

| | APPROVED BY | DATE |
|---|---|---|
| PRINCIPAL ENGINEER | [signature] | 11/1/93 |
| PARK DEPARTMENT | [signature] | 6/7/92 |
| TRAFFIC DIVISION | [signature] | 12/15/92 |
| CHIEF P.W. ENGR. | [signature] | 12/1/93 |
| ~~PLANNING~~ | [signature] | 12/1/93 |

APPROVED BY [signature]
DIRECTOR OF PUBLIC WORKS
DATE 12/1/93

TRACT 25486
**CANYON CREST DRIVE**
**STREET IMPROVEMENT PLANS**
PLAN & PROFILE
STA. 115+00.00 TO 119+86.12
FOR: CHRISTIAN BEAGUM & ASSOCIATES

PROJECT NO. R-3253 A
SHEET 5A OF 6
FILE NO. 8911565

INDEXED 7-29-94 GH

PC-48-5-1/5

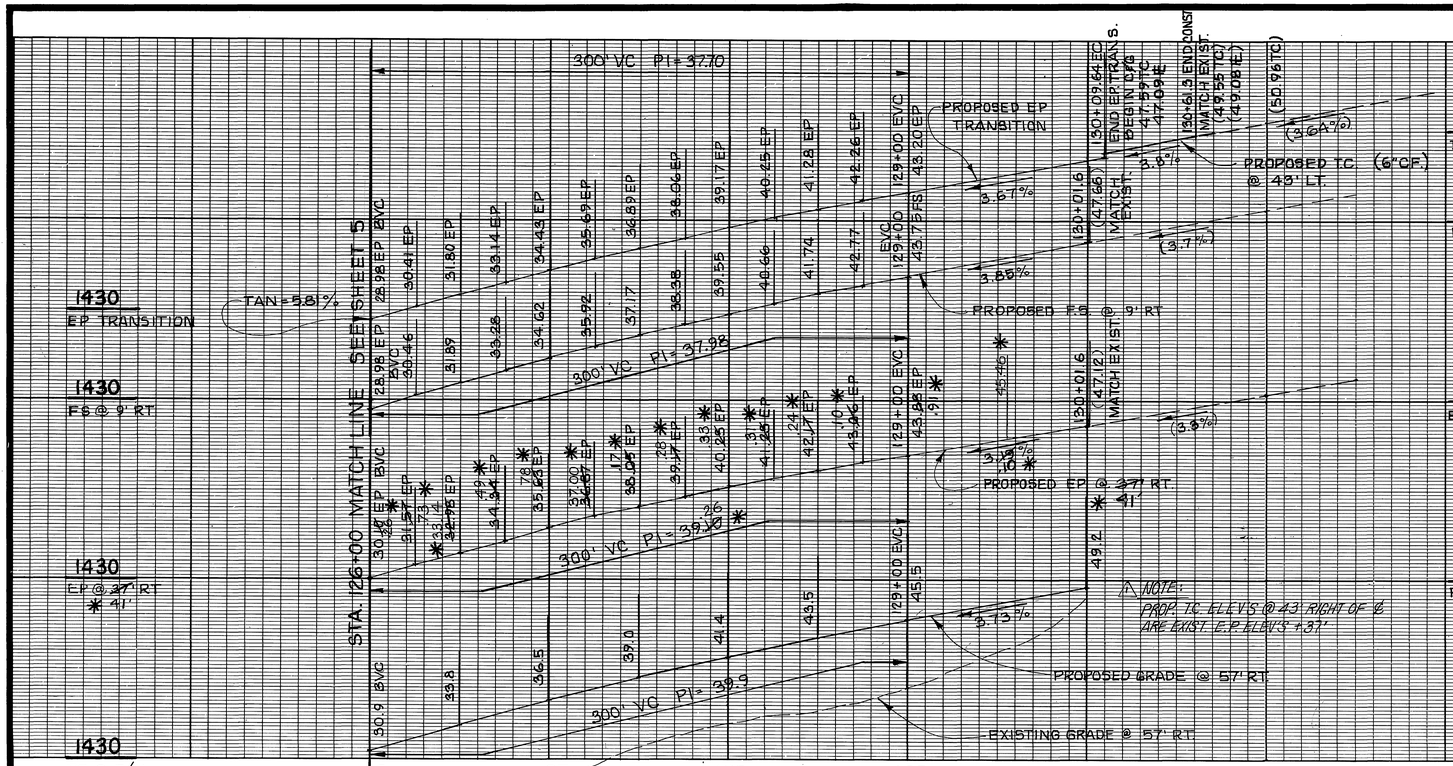


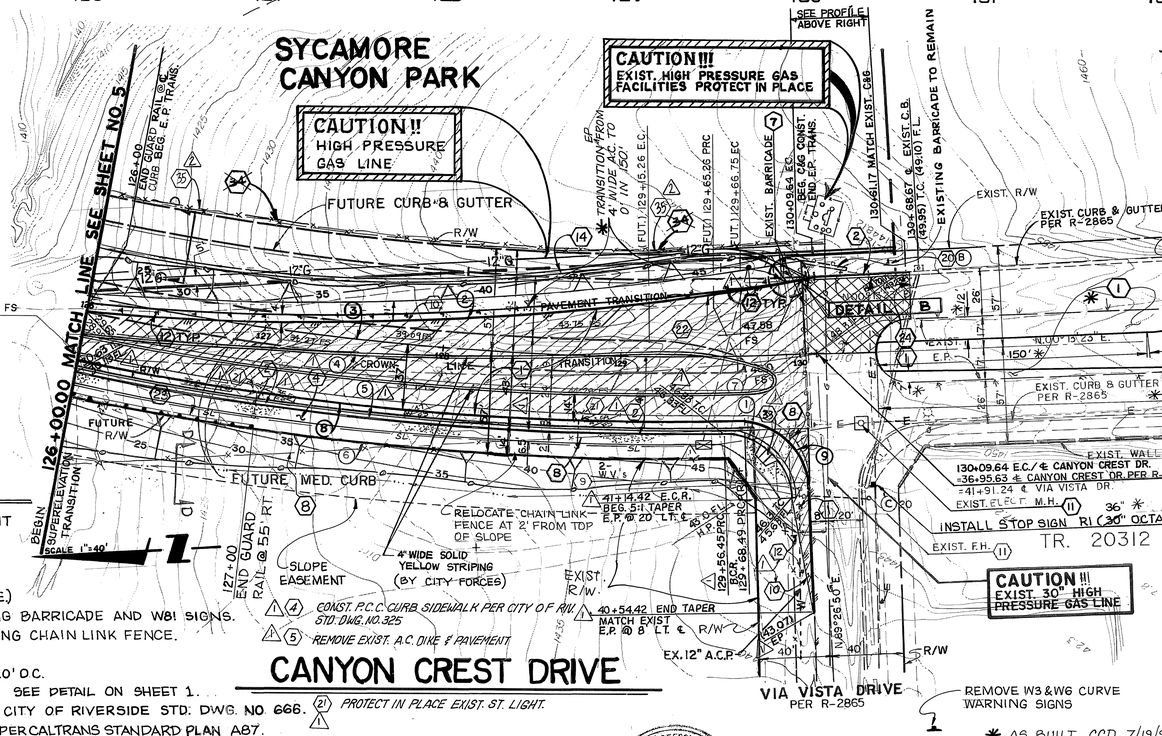


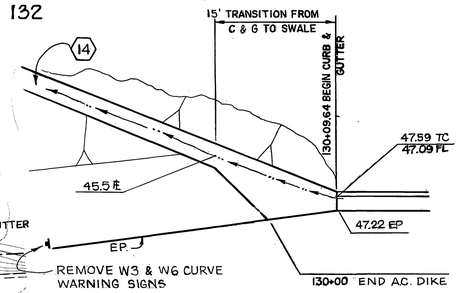


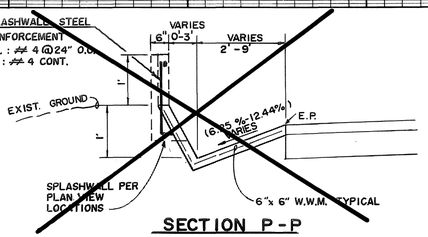


SECTION P-P
N.T.S.

## CONSTRUCTION NOTES:

1. CONSTRUCT 0.28' AC. PAVEMENT OVER 0.88' AGGREGATE BASE.
2. CONSTRUCT CURB & GUTTER PER CITY OF RIVERSIDE STD. DWG. NO. 200 TYPE I (6" CURB FACE.)
7. REMOVE & SALVAGE EXISTING BARRICADE AND W81 SIGNS.
8. REMOVE & RELOCATE EXISTING CHAIN LINK FENCE.
11. PROTECT IN PLACE.
12. INSTALL F-1 DELINEATOR @ 20' O.C.
14. CONSTRUCT 3' P.C.C. V-DITCH. SEE DETAIL ON SHEET 1.
20. INSTALL TRAFFIC SIGN PER CITY OF RIVERSIDE STD. DWG. NO. 666.
22. CONSTRUCT TYPE 'E' A.C. DIKE PER CALTRANS STANDARD PLAN A87.
23. INSTALL GUARD RAIL PER CITY OF RIVERSIDE STD. DWG NO. 650 EXCLUDE PAINTING AND REFLECTOR REQUIREMENTS.
24. REMOVE EXISTING A.C. & REPLACE WITH 0.28' AC. PAVEMENT OVER 0.88' AGGREGATE BASE.
10. INSTALL 2"x4" REDWOOD HEADER
26. CONSTRUCT WHEELCHAIR RAMP PER CITY OF R/V. STD. 304
35. INSTALL PARK FENCE PER DETAIL ON SHEET 1

| CURVE DATA | | | | |
|---|---|---|---|---|
| No. | Δ | R | L | T |
| 1 | 88°07'18" | 35.00' | 53.83' | 33.87' |
| 2 | 15°36'43" | 1500.00' | 408.72' | 205.63' |
| 3 | 14°40'09" | 1600.00' | 409.64' | 205.95' |
| 4 | 13°04'48" | 1609.00' | 367.32' | 184.86' |
| 5 | 12°45'52" | 1643.00' | 366.03' | 183.77' |
| 6 | 12°45'28" | 1657.00' | 368.96' | 185.28' |
| 7 | 158°11'55" | 4.00' | 11.04' | 20.77' |
| 8 | 13°11'44" | 1687.00' | 377.01' | 189.34' |
| 9 | 87°45'02" | 35.00' | 53.60' | 33.65' |

CITY OF RIVERSIDE
PUBLIC UTILITIES DEPT- ELECTRIC DEPT.
OVERHEAD & UNDERGROUND.
APPROVED BY: John L. Sweeney 8-6-98 DATE

CITY OF RIVERSIDE
PLANNING DEPT.
APPROVED BY: Diane Jenkins 8-17-98 DATE

CITY OF RIVERSIDE
PARKS & REC. DEPT.
APPROVED BY: Robert Gotor 8/27/98 DATE:

CITY OF RIVERSIDE
PARKS & RECREATION DEPT.
APPROVED BY: Jay Mullen 6/22/98 DATE

SEAL
6-30-01

PREPARED UNDER THE DIRECTION OF:
CANTY ENGINEERING GROUP, INC.
TECK C. LOH
REGISTERED CIVIL ENGINEER NO. 50223
EXPIRATION DATE: 6-30-01 DATE: 4-10-98

SOUTHERN CALIFORNIA GAS CO.
REVIEWED BY: DATE: 6-19-98

CITY OF RIVERSIDE WATER SYSTEM
APPROVED BY: DATE:

CITY OF RIVERSIDE OVERHEAD & UNDERGROUND
APPROVED BY: DATE: 7-16-98

BENCHMARK
P.K. NAIL AND TAG IN BASE OF LIGHT STANDARD IN MEDIAN STRIP OF COUNTRY CLUB DRIVE 60' WEST OF ℄ OF CANYON CREST DRIVE.
ELEVATION 1068.06'

REGISTERED PROFESSIONAL ENGINEER LAUREN FRED CALDWELL No. 39441 CIVIL STATE OF CALIFORNIA

ENGINEER IN RESPONSIBLE CHARGE
LAUREN F. CALDWELL
R.C.E. No. 39441 expires 12/31/93
DATE 6/3/93

| MARK | REVISIONS | APPR. | DATE |
|---|---|---|---|
| 2 | ADDED PARK FENCE | RVZ | 5-6-02 |
| 1 | ADDED IMPROVEMENTS PER TR 25486-1 | RVZ | 9-17-98 |

DESIGNED BY LARRY DRAWN BY CCD & CO CHECKED BY

| APPROVED BY | DATE | BY |
|---|---|---|
| PRINCIPAL ENGINEER | 6/19/98 | RVZ |
| DEPUTY PW. DIRECTOR | 6/25/98 | RMC |
| TRAFFIC DIVISION | 6/16/98 | JC |
| CHIEF P. W. INSPECTOR | 6/19/98 | CW |
| STREET SERVICES | 6/18/98 | KS |
| SURVEYOR | 6/16/98 | JSD |

# CITY OF RIVERSIDE
## PUBLIC WORKS DEPARTMENT

APPROVED BY: DATE:
PUBLIC WORKS DIRECTOR

# CANYON CREST DRIVE EXTENSION
## FROM COUNTRY CLUB DR. TO VIA VISTA DR.

HORIZ. SCALE: 1"=40' VERT. SCALE: 1"=8'

ACCOUNT NUMBER: 432 541500 44302 30525

R-3253A

SHEET 6 OF 6

INDEXED 7-29-98 LH

4-8-93

R4-4976-1H