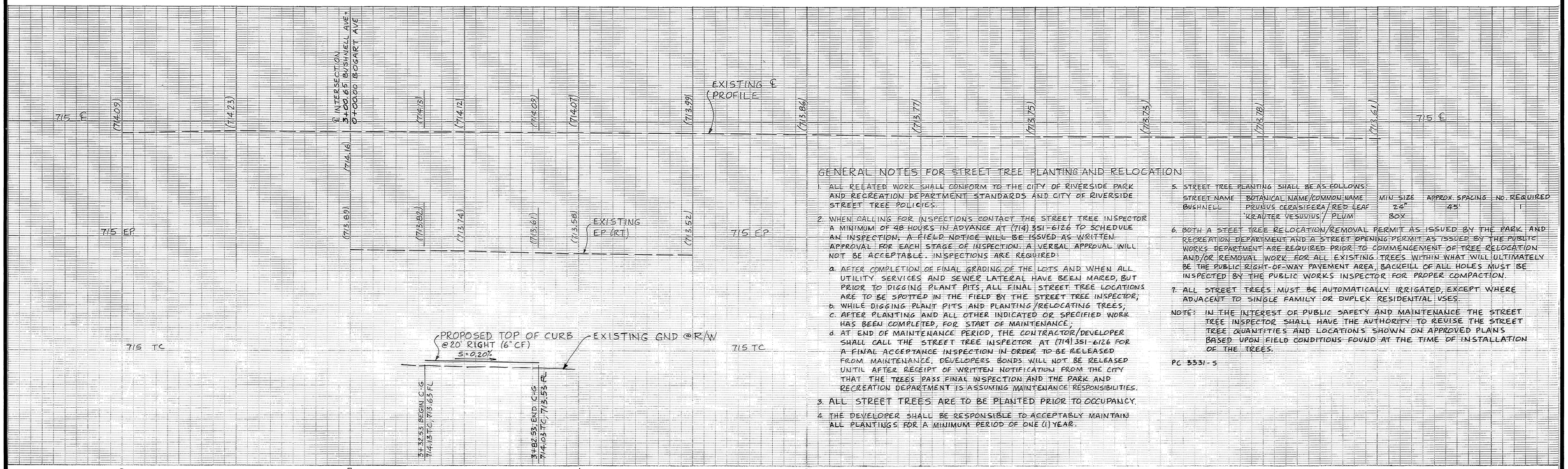

GENERAL NOTES FOR STREET TREE PLANTING AND RELOCATION

1. ALL RELATED WORK SHALL CONFORM TO THE CITY OF RIVERSIDE PARK AND RECREATION DEPARTMENT STANDARDS AND CITY OF RIVERSIDE STREET TREE POLICIES.
2. WHEN CALLING FOR INSPECTIONS CONTACT THE STREET TREE INSPECTOR A MINIMUM OF 48 HOURS IN ADVANCE AT (714) 351-6126 TO SCHEDULE AN INSPECTION. A FIELD NOTICE WILL BE ISSUED AS WRITTEN APPROVAL FOR EACH STAGE OF INSPECTION. A VERBAL APPROVAL WILL NOT BE ACCEPTABLE. INSPECTIONS ARE REQUIRED:
   a. AFTER COMPLETION OF FINAL GRADING OF THE LOTS AND WHEN ALL UTILITY SERVICES AND SEWER LATERAL HAVE BEEN MARKED, BUT PRIOR TO DIGGING PLANT PITS, ALL FINAL STREET TREE LOCATIONS ARE TO BE SPOTTED IN THE FIELD BY THE STREET TREE INSPECTOR;
   b. WHILE DIGGING PLANT PITS AND PLANTING/RELOCATING TREES;
   c. AFTER PLANTING AND ALL OTHER INDICATED OR SPECIFIED WORK HAS BEEN COMPLETED, FOR START OF MAINTENANCE;
   d. AT END OF MAINTENANCE PERIOD, THE CONTRACTOR/DEVELOPER SHALL CALL THE STREET TREE INSPECTOR AT (714) 351-6126 FOR A FINAL ACCEPTANCE INSPECTION IN ORDER TO BE RELEASED FROM MAINTENANCE. DEVELOPERS BONDS WILL NOT BE RELEASED UNTIL AFTER RECEIPT OF WRITTEN NOTIFICATION FROM THE CITY THAT THE TREES PASS FINAL INSPECTION AND THE PARK AND RECREATION DEPARTMENT IS ASSUMING MAINTENANCE RESPONSIBILITIES.
3. ALL STREET TREES ARE TO BE PLANTED PRIOR TO OCCUPANCY.
4. THE DEVELOPER SHALL BE RESPONSIBLE TO ACCEPTABLY MAINTAIN ALL PLANTINGS FOR A MINIMUM PERIOD OF ONE (1) YEAR.
5. STREET TREE PLANTING SHALL BE AS FOLLOWS:

STREET NAME	BOTANICAL NAME/COMMON NAME	MIN SIZE	APPROX. SPACING	NO. REQUIRED
BUSHNELL	PRUNUS CERASIFERA/RED LEAF PLUM	24" BOX	45'	1
	KRAUTER VESUVIUS			

6. BOTH A STEET TREE RELOCATION/REMOVAL PERMIT AS ISSUED BY THE PARK AND RECREATION DEPARTMENT AND A STREET OPENING PERMIT AS ISSUED BY THE PUBLIC WORKS DEPARTMENT ARE REQUIRED PRIOR TO COMMENCEMENT OF TREE RELOCATION AND/OR REMOVAL WORK FOR ALL EXISTING TREES WITHIN WHAT WILL ULTIMATELY BE THE PUBLIC RIGHT-OF-WAY PAVEMENT AREA, BACKFILL OF ALL HOLES MUST BE INSPECTED BY THE PUBLIC WORKS INSPECTOR FOR PROPER COMPACTION.
7. ALL STREET TREES MUST BE AUTOMATICALLY IRRIGATED, EXCEPT WHERE ADJACENT TO SINGLE FAMILY OR DUPLEX RESIDENTIAL USES.

NOTE: IN THE INTEREST OF PUBLIC SAFETY AND MAINTENANCE THE STREET TREE INSPECTOR SHALL HAVE THE AUTHORITY TO REVISE THE STREET TREE QUANTITIES AND LOCATIONS SHOWN ON APPROVED PLANS BASED UPON FIELD CONDITIONS FOUND AT THE TIME OF INSTALLATION OF THE TREES.

PC 3331-5

BENCHMARK: PK & C.R. TAG IN TOP OF CURB @ NORTHWEST CORNER OF THE TRAFFIC SIGNAL ISLAND ON THE S'ELY CORNER OF HOLE AVE & LA SIERRA AVE PER CRFB 100B/11. ELEV. = 713.09

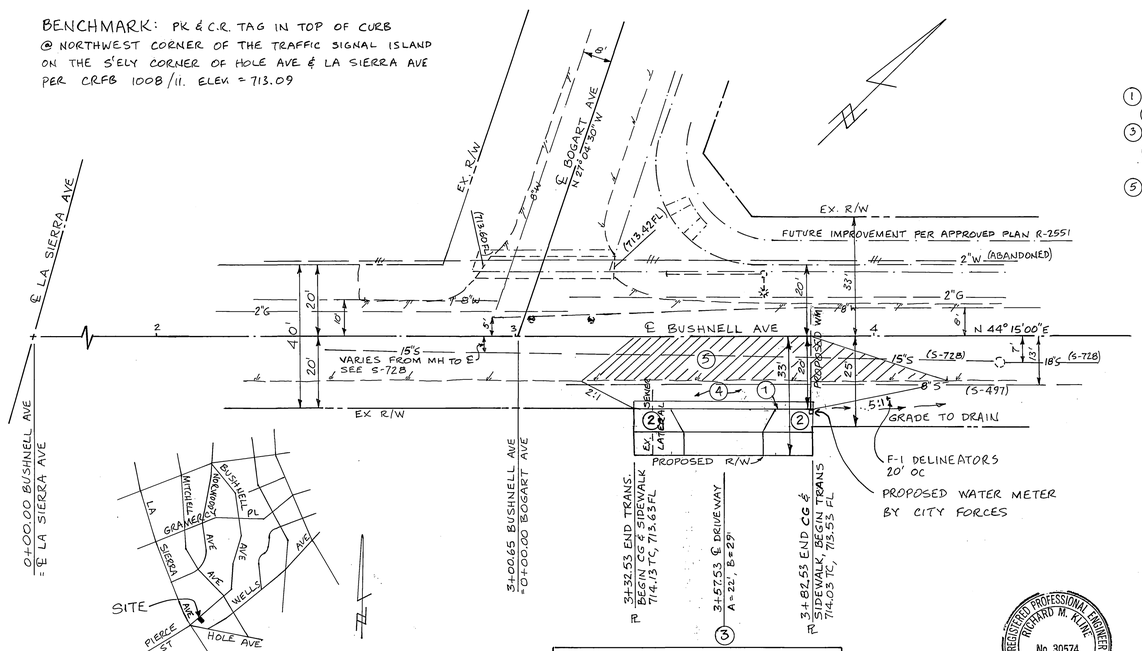

VICINITY MAP
NTS

CONSTRUCTION NOTES & QUANTITIES

1	CONSTRUCT STD NO. 200 CURB & GUTTER - TYPE I (6"CF)	19 LF
2	CONSTRUCT STD. NO. 325 CURB SIDEWALK	300 SF
3	CONSTRUCT STD. NO. 302 DRIVEWAY APPROACH	1 EA
4	PLACE 3" AC OVER 4" CRUSHED AGG BASE PER R-2551 (SR # 1170 - R = 39)	525 SF
5	OVERLAY TO ℄	900 SF

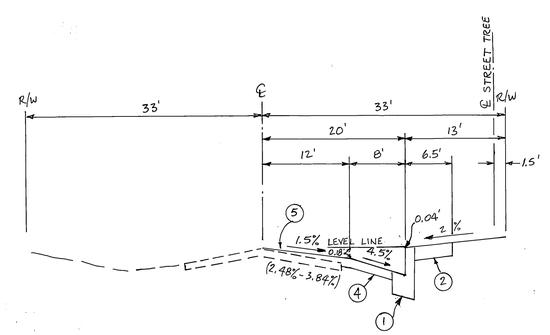

TYPICAL SECTION
BUSHNELL AVE
T.I. = 5.0

GENERAL NOTES

1. ALL CONSTRUCTION SHALL BE IN ACCORDANCE WITH THE CITY OF RIVERSIDE, DEPARTMENT OF PUBLIC WORKS, STANDARD DRAWINGS, STANDARD DRAWING NO. 10, AND THE STANDARD SPECIFICATIONS FOR PUBLIC WORKS CONSTRUCTION, CURRENT EDITION.
2. ~~DEVELOPER TO GIVE CITY WATER DIVISION FIVE (5) WORKING DAYS WRITTEN NOTICE PRIOR TO START OF CONSTRUCTION & TO ALLOW CITY TEN (10) WORKING DAYS FOR COMPLETION OF WORK (351-6150)~~
3. IT IS THE RESPONSIBILITY OF THE CONTRACTOR TO CLEAR THE RIGHT OF WAY IN ACCORDANCE WITH THE PROVISIONS OF LAW AS IT AFFECTS EACH UTILITY INCLUDING IRRIGATION LINES & APPURTENANCES & AT NO COST TO THE CITY.
4. THE PRIVATE ENGINEER SIGNING THESE PLANS IS RESPONSIBLE FOR ASSURING THE ACCURACY & ACCEPTABILITY OF THE WORK HEREON. IN THE EVENT OF DISCREPANCIES ARISING DURING CONSTRUCTION, THE PRIVATE ENGINEER SHALL BE RESPONSIBLE FOR DETERMINING AN ACCEPTABLE SOLUTION AND REVISING THE PLANS FOR APPROVAL BY THE CITY.
5. THE DEVELOPER SHALL BE RESPONSIBLE FOR PRESERVING OR RE-ESTABLISHING & REFERENCING SURVEY MONUMENTS DESTROYED, DISTURBED OR BURIED AS A RESULT OF CONSTRUCTION SHOWN HEREON.
6. ALL FLAGGED ELEVATIONS SHALL BE STAKED IN THE FIELD BY THE PRIVATE ENGINEER.
7. CONSTRUCT MATCH-UP PAVING AS SHOWN ON PLAN & OVERLAY AS DIRECTED IN THE FIELD TO PROVIDE A SMOOTH SECTION.
8. ANY TRAFFIC CONTROL STRIPING OBLITERATED AND/OR BADLY WORN DURING CONSTRUCTION SHALL BE RESTORED BY THE CONTRACTOR WITHIN FIVE DAYS AFTER NOTIFICATION FROM CITY INSPECTORS.
9. FINAL STRIPING FOR TRAFFIC CONTROL AND/OR PAVEMENT MARKINGS TO BE THE RESPONSIBILITY OF THE DEVELOPER.
10. THE CONTRACTOR SHALL CALL IN A LOCATION REQUEST TO UNDERGROUND SERVICE ALERT (USA) PHONE NO. 1-800-422-4133, TWO DAYS BEFORE DIGGING, NO CONSTRUCTION PERMIT WILL BE ISSUED BY THE PUBLIC WORKS DEPARTMENT INVOLVING EXCAVATION FOR UNDERGROUND FACILITIES UNLESS THE APPLICANT HAS BEEN PROVIDED AN INQUIRY IDENTIFICATION NUMBER BY USA.

REGISTERED PROFESSIONAL ENGINEER RICHARD M. KLINE No. 30574 Exp. 3-31-96 CIVIL STATE OF CALIFORNIA

CENCOM CABLE TV
APPROVED BY: Joseph Brown — DATE: 3-16-92

SOUTHERN CALIF. GAS CO.	CITY OF RIVERSIDE ELECTRIC - OVERHEAD & UNDERGROUND	CITY OF RIVERSIDE WATER SYSTEM	RICHARD KLINE - CIVIL ENGINEER, PO BOX 811, RIVERSIDE, CA, 92502, (714) 924-9681 APPROVED BY: CITY OF RIVERSIDE BUS. # 022190 EXP. 6/22/92
APPROVED BY: H. D. Sanchez — DATE: 3-17-92	APPROVED BY: Jim Wm Whotten — DATE: 3-16-92	APPROVED BY: Richard L. Drobnick — DATE: 4-10-92	Richard M. Kline, RICHARD M. KLINE — DATE: 12/26/91

MARK	REVISIONS	APPR.	DATE

DESIGNED BY RMK DRAWN BY RMK CHECKED BY RMK

CITY OF RIVERSIDE
PUBLIC WORKS DEPARTMENT

APPROVED BY	DATE	BY
PRINCIPAL ENGINEER	5/13/92	
PARK DEPARTMENT	4-27-92	
TRAFFIC DIVISION	5-13-92	
CHIEF P. W. ENGINEER	5-18-92	
	5/13/92	

APPROVED BY: PUBLIC WORKS DIRECTOR — DATE: 5/18/92

PLAN AND PROFILE FOR
11056-58 BUSHNELL AVENUE
FROM 332.53' TO 382.53' N/O LA SIERRA AVE

AS BUILT 2/25/93

ACCOUNT NO. R-3273

SHEET 1 OF 1

HORIZ. SCALE: 1" = 20' VERT. SCALE: 1" = 4'

PC 3331-5

INDEXED 9-16-92 LH