TRACT 25486-2
STREET IMPROVEMENT PLANS

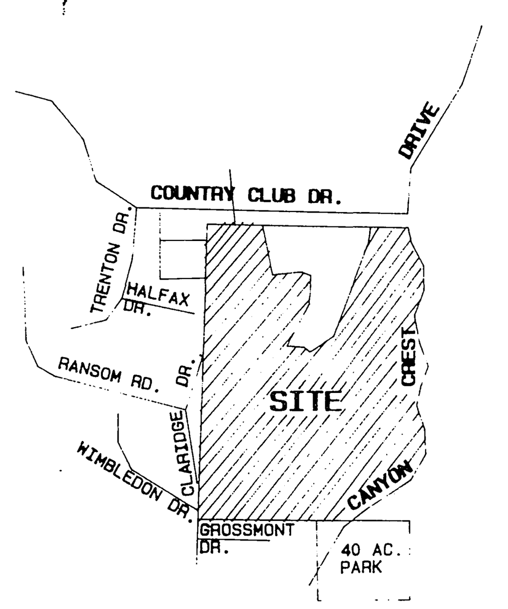

VICINITY MAP
N.T.S.

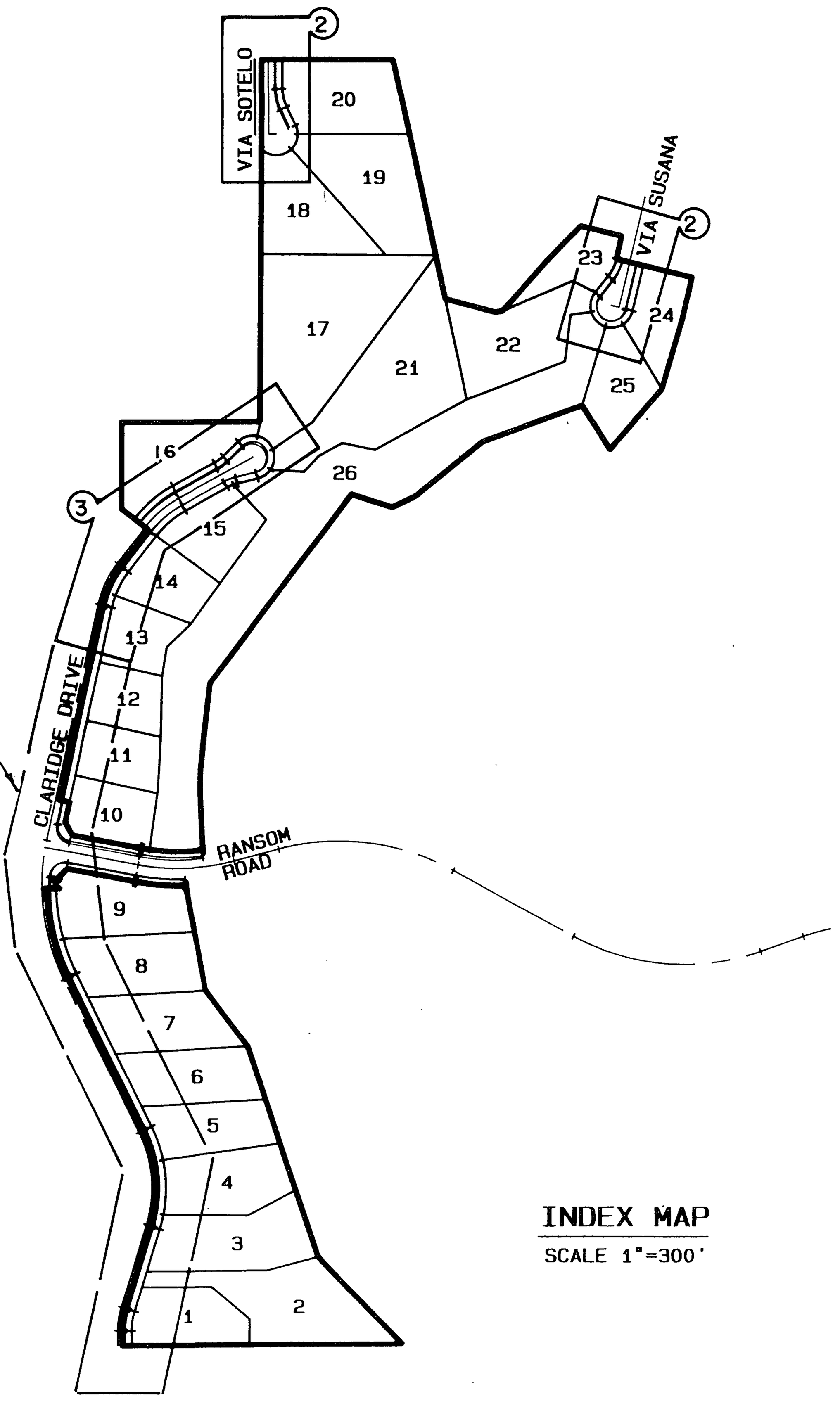

INDEX MAP
SCALE 1"=300'

CONSTRUCTION NOTES

(1) CONSTRUCT A.C. OVER AGG. BASE PER TYP. SEC.
(2) CONSTRUCT TYPE I CURB & GUTTER (6" C.F.). PER CITY STD. NO. 200.
(3) JOIN EXIST. E.P. (FEATHER OVER FOR SMOOTH JOIN)
(4) CONSTRUCT CURB SIDEWALK PER CITY STD. NO. 325.
(5) CONSTRUCT TYPE I CURB & GUTTER (8" C.F.) PER CITY STD. NO. 200.
(7) PLACE 2x4 REDWOOD HEADER
(15) REMOVE & SALVAGE EXIST. BARRICADE PER GENERAL NOTE NO. 5.
(20) REMOVE EXIST. REDWOOD HEADER.
(23) CONSTRUCT CURB OUTLET PER CITY STD. NO. 410.
(24) PLANT STREET TREES PER PARKS & RECREATION DEPT. STD.
(25) CONSTRUCT UNDERSIDEWALK DRAIN PER CITY STD. NO. 411.

PARKS AND RECREATION NOTES

1. All related work shall conform to the City of Riverside, Park and Recreation Department Standards and City of Riverside Street Tree policies.
2. ALL STREET TREES SHALL BE PLANTED PRIOR TO OCCUPANCY.
3. The Developer shall be responsible to acceptably maintain all plantings for a minimum period of one (1) year.
4. All Street Trees must be automatically irrigated, except where adjacent to single family or duplex residential uses.

*NOTE: In the interest of public safety and maintenance the Street Tree Inspector shall have the authority to revise the street tree quantities and locations shown on approved plans based upon field conditions found at the time of installation of the trees.

5. When calling for inspections contact the Street Tree Inspector a minimum of 48 hours in advance at (714) 351-6126 to schedule an inspection. A Field Notice will be issued as written approval for each stage of inspection. A verbal approval will not be acceptable. Inspections are required:
   a. After completion of final grading of the lots and when all utility services and sewer laterals have been marked, but prior to digging plant pits, all final street tree locations are to be spotted in the field by the street tree inspector.
   b. While digging plant pits and planting/relocating trees;
   c. After planting and all other indicated or specified work has been completed, for start of maintenance;
   d. At end of the maintenance period, the contractor/developer shall call the Street Tree Inspector at (714) 351-6126 for a final acceptance inspection in order to be released from maintenance. Developers bonds will not be released until after receipt of written notification from the City that the trees pass final inspection and the Park and Recreation department is assuming maintenance responsibilities.
6. Both a street tree Relocation/Removal permit as issued by the Park and Recreation Department and a Street Opening permit as issued by the Public Works Department are required prior to commencement of tree relocation and/or removal work. For all existing trees within what will ultimately be the Public Right-of-Way pavement area, backfill of all holes must be inspected by the Public Works Inspector for proper compaction.
7. Street tree planting shall be as follows:

STREET NAME	BOTANICAL NAME/COMMON NAME	SIZE	SPACING	REQ. QTY.
VIA SOTELO	ULMUS PARVIFOLIA/EVERGREEN ELM	15 GAL.	45'	7
VIA SUSANA	PISTACIA CHINENSIS/PISTACHE	15 GAL.	45'	9
CLARIDGE DR.	JACARANDA MINOSIFOLIA/JACARANDA	15 GAL.	45'	23

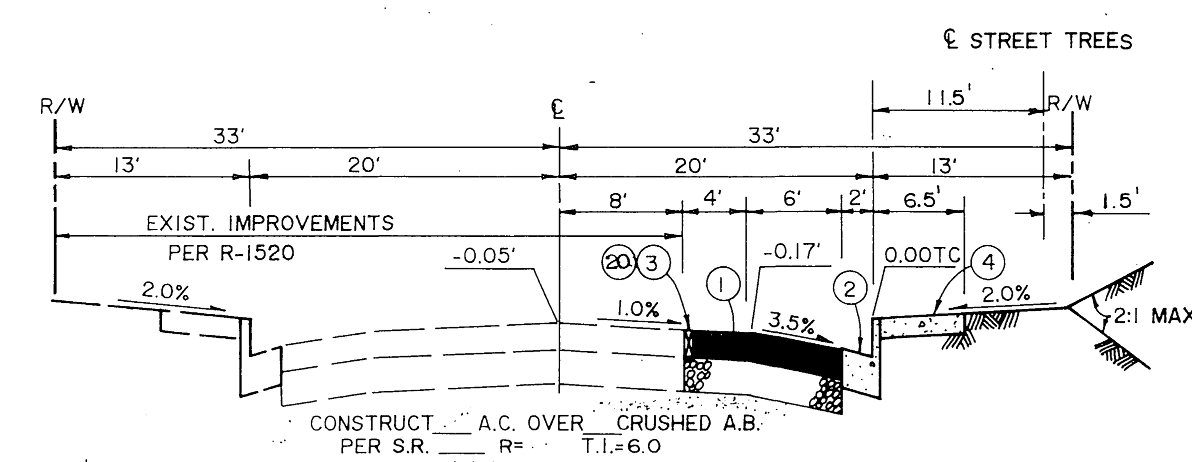

TYP. SECTION SCALE: 1"=10'
CLARIDGE DR. 5+50. TO 8+11.61

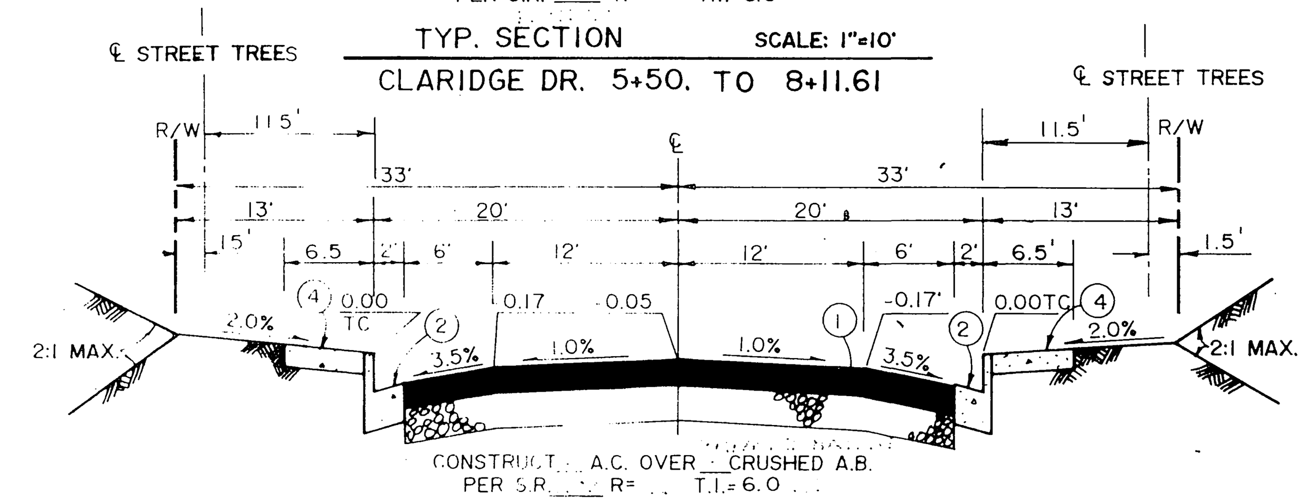

TYP. SECTION SCALE: 1"=10'
CLARIDGE DR. 8+11.61 TO 11+17.61

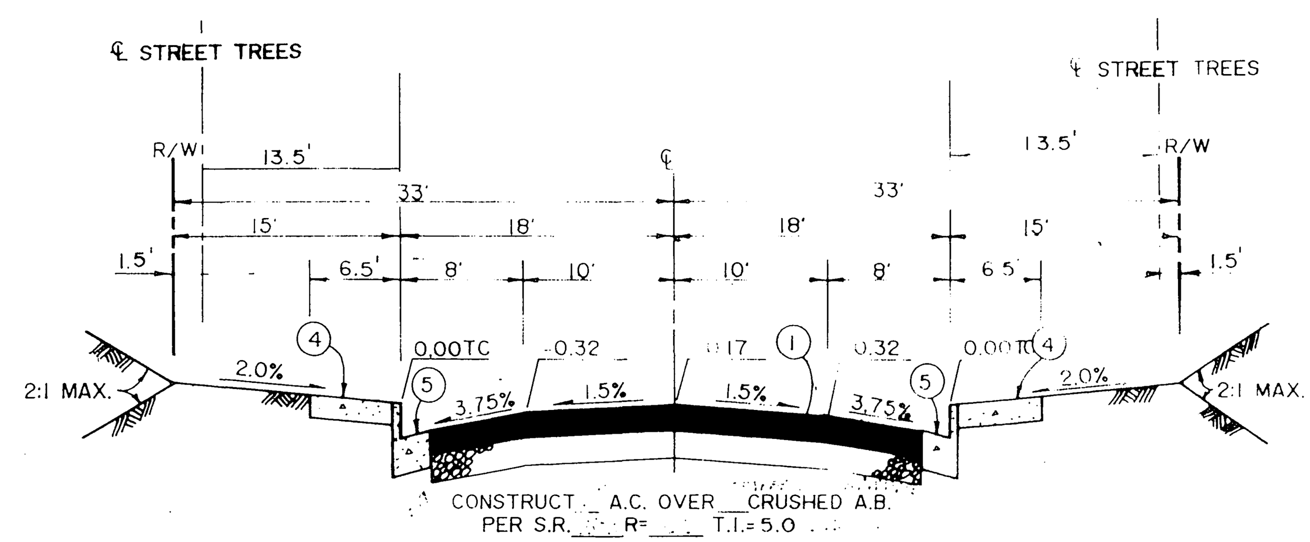

TYP. SECTION SCALE: 1"=10'
VIA SUSANA 5+46.02 TO 6+64.63

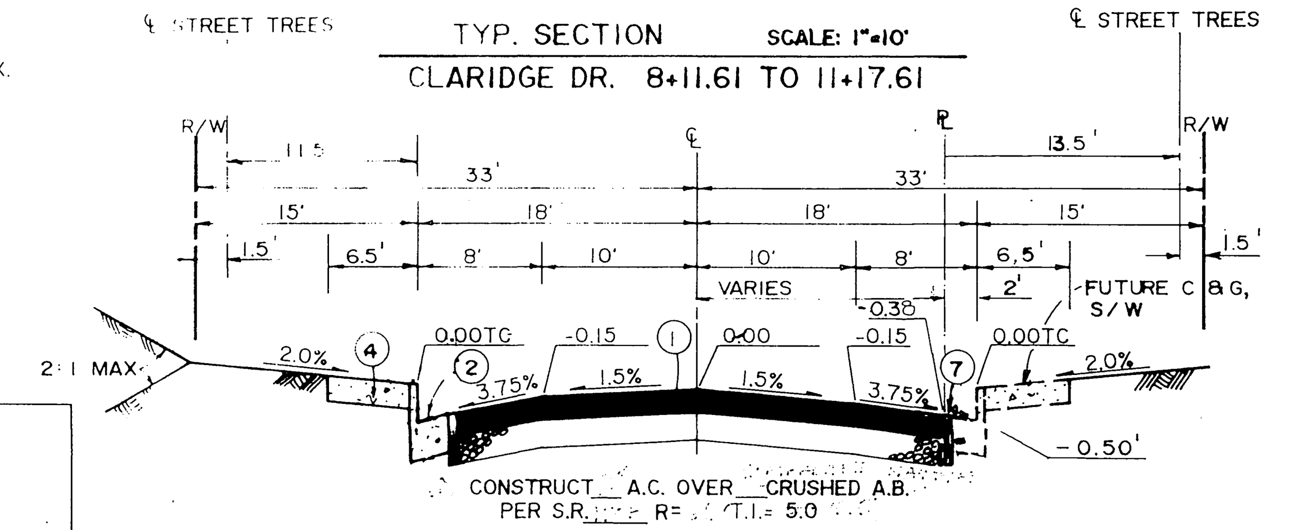

TYP. SECTION SCALE: 1"=10'
VIA SOTELO 1+77.50 TO 3+59.81

GENERAL NOTES

1. IT SHALL BE THE RESPONSIBILITY OF THE CONTRACTOR TO CLEAR THE RIGHT OF WAY IN ACCORDANCE WITH THE PROVISIONS OF LAW AS IT AFFECTS EACH UTILITY INCLUDING IRRIGATION LINES AND APPURTENANCES AND AT NO COST TO THE CITY.
2. CONSTRUCTION SHALL BE IN ACCORDANCE WITH THE CITY OF RIVERSIDE DEPT. OF PUBLIC WORKS, STANDARD DRAWINGS, STD. DWG. NO. 10, AND THE STANDARD SPECIFICATIONS FOR PUBLIC WORKS CONSTRUCTION, CURRENT EDITION.
3. TRIM EDGE OF EXISTING PAVEMENT WHERE NEW PAVEMENT JOINS TO A SMOOTH, STRAIGHT LINE. CONSTRUCT MATCH-UP PAVING AS SHOWN ON PLAN AND OVERLAY PAVING AS DIRECTED IN THE FIELD TO PRODUCE A SMOOTH SECTION.
4. CONSTRUCT DRIVEWAY APPROACHES PER STD. DWG. 302. EXACT SIZE AND LOCATION TO BE DETERMINED AT THE TIME OF CONSTRUCTION AS APPROVED BY THE TRAFFIC ENGINEER.
5. THE DEVELOPER AND/OR CONTRACTOR SHALL CONTACT THE STREET DIVISION (351-6127) TO PICK UP ANY EXISTING STANDARD 180 BARRICADES THAT ARE BEING REMOVED. THE CITY'S INSPECTOR WILL MAKE THE FINAL DETERMINATION ON WHETHER A BARRICADE CAN BE RELOCATED.
6. THE SUBDIVIDER SHALL ARRANGE FOR A SOIL TEST TO BE MADE BY A SOILS ENGINEER AFTER THE STREETS HAVE BEEN PREPARED TO ROUGH GRADE AND PRIOR TO CURB AND GUTTER CONSTRUCTION. DEPTH OF BASE MATERIAL AND A.C. PAVING SHALL BE DETERMINED BY THE CITY OF RIVERSIDE DESIGN STANDARDS AND TEST PROCEDURES.
7. ALL FLAGGED ELEVATIONS SHALL BE STAKED IN THE FIELD BY THE PRIVATE ENGINEER.
8. THE PRIVATE ENGINEER SIGNING THESE PLANS IS RESPONSIBLE FOR ASSURING THE ACCURACY AND ACCEPTABILITY OF THE WORK HEREON. IN THE EVENT OF DISCREPANCIES ARISING DURING CONSTRUCTION, THE PRIVATE ENGINEER SHALL BE RESPONSIBLE FOR DETERMINING AN ACCEPTABLE SOLUTION AND REVISING THE PLANS FOR APPROVAL BY THE CITY.
9. THE DEVELOPER SHALL BE RESPONSIBLE FOR PRESERVING OR RE-ESTABLISHING AND REFERENCING SURVEY MONUMENTS DESTROYED, DISTURBED OR BURIED AS A RESULT OF CONSTRUCTION SHOWN HEREON.
10. ON ALL AREAS WITHIN PUBLIC RIGHT OF WAY WHERE THE FILL IS ONE (1) FOOT OR GREATER, A LETTER WILL BE REQUIRED FROM THE SOILS ENGINEEER, CERTIFYING THE COMPACTION OF THE FILL BELOW SUBGRADE, PRIOR TO ISSUANCE OF THE CONSTRUCTION PERMIT/CUT SHEETS.
11. ALL TRAFFIC SIGNS SHALL BE INSTALLED PRIOR TO OPENING THE STREETS TO TRAFFIC.
12. SEE "STREET LIGHTING PLANS" FOR QUANTITY AND LOCATION OF REQUIRED STREET LIGHTS.
13. NOTICE TO CONTRACTOR. THE EXISTENCE AND LOCATION OF ANY UNDERGROUND UTILITY PIPES OR STRUCTURES SHOWN ON THESE PLANS WERE OBTAINED BY A SEARCH OF THE AVAILABLE RECORDS. TO THE BEST OF OUR KNOWLEDGE THERE ARE NO EXISTING UTILITIES EXCEPT AS SHOWN ON THESE PLANS. THE CONTRACTOR IS REQUIRED TO TAKE PRECAUTIONARY MEASURES TO PROTECT THE UTILITY LINES SHOWN AND ANY OTHER LINES NOT OF RECORD OR NOT SHOWN ON THESE PLANS.
14. CONTRACTOR AGREES THAT HE SHALL ASSUME SOLE AND COMPLETE RESPONSIBILITY FOR JOB SITE CONDITIONS DURING THE COURSE OF CONSTRUCTION OF THIS PROJECT, INCLUDING SAFETY OF ALL PERSONS AND PROPERTY; THAT THIS REQUIREMENT SHALL APPLY CONTINUOUSLY AND NOT BE LIMITED TO NORMAL WORKING HOURS; AND THAT THE CONTRACTOR SHALL DEFEND, INDEMNIFY AND HOLD THE OWNER AND THE ENGINEER HARMLESS FROM ANY AND ALL LIABILITY, REAL OR ALLEGED, IN CONNECTION WITH THE PERFORMANCE OF WORK ON THIS PROJECT, EXCEPTING FOR LIABILITY ARISING FROM THE SOLE NEGLIGENCE OF THE OWNER OR ENGINEER.
15. ANY TRAFFIC CONTROL STRIPING OBLITERATED AND/OR BADLY WORN DURING CONSTRUCTION SHALL BE RESTORED BY THE CONTRACTOR WITHIN FIVE DAYS AFTER NOTIFICATION FROM THE CITY INSPECTORS.
16. THE CONTRACTOR SHALL CALL IN A LOCATION REQUEST TO UNDERGROUND SERVICE ALERT (USA), PHONE NO. 1-800-422-4133, TWO WORKING DAYS BEFORE DIGGING. NO CONSTRUCTION PERMIT WILL BE ISSUED BY THE PUBLIC WORKS DEPARTMENT INVOLVING EXCAVATION FOR UNDERGROUND FACILITIES UNLESS THE APPLICANT HAS BEEN PROVIDED AN INQUIRY IDENTIFICATION NUMBER BY U.S.A.
17. QUANTITIES SHOWN ARE FOR INFORMATION ONLY AND THE CITY OF RIVERSIDE IS NOT RESPONSIBLE FOR THEIR ACCURACY.
18. THE DEVELOPER SHALL GIVE THE CITY WATER DIVISION FIVE (5) WORKING DAYS WRITTEN NOTICE PRIOR TO THE START OF CONSTRUCTION AND TO ALLOW THE CITY TEN (10) WORKING DAYS FOR COMPLETION OF WORK. PHONE: (714) 351-6150
19. IN PAVEMENT OVERLAY AREAS, DISTRESSED EXISTING PAVEMENT SHALL BE REMOVED AND REPLACED AS DIRECTED BY THE INSPECTOR PRIOR TO OVERLAYING WITH A.C. PAVING.
20. THE CONTRACTOR SHALL COORDINATE TRENCHING FOR CABLE TELEVISION WITH OTHER TRENCHING WITHIN THE SUBDIVISION.

CITY OF RIVERSIDE WATER SYSTEM	SOUTHERN CALIFORNIA GAS COMPANY	PACIFIC BELL TELEPHONE	CITY OF RIVERSIDE OVERHEAD & UNDERGROUND	CENCOM CABLE TELEVISION
Richard J. Drobek 7-31-92	H. Dave Sanchez 6-2-92	J M Chamberl 6/2/92	Wm Whitler 7/15/92	5-22
APPROVED BY: DATE	APPROVED BY: DATE	APPROVED BY: DATE	APPROVED BY: DATE	APPROVED BY: DATE

Underground Service Alert
CALL BEFORE YOU DIG
Call: TOLL FREE
1-800
422-4133
TWO WORKING DAYS BEFORE YOU DIG

PRIVATE ENGINEERING NOTE

CONSTRUCTION CONTRACTOR AGREES THAT IN ACCORDANCE WITH GENERALLY ACCEPTED CONSTRUCTION PRACTICES, CONSTRUCTION CONTRACTOR WILL BE REQUIRED TO ASSUME SOLE AND COMPLETE RESPONSIBILITY FOR JOB SITE CONDITIONS DURING THE COURSE OF CONSTRUCTION OF THE PROJECT, INCLUDING SAFETY OF ALL PERSONS AND PROPERTY; THAT THIS REQUIREMENT SHALL BE MADE TO APPLY CONTINUOUSLY AND NOT BE LIMITED TO NORMAL WORKING HOURS, AND CONSTRUCTION CONTRACTOR FURTHER AGREES TO DEFEND, INDEMNIFY AND HOLD DESIGN PROFESSIONAL HARMLESS FROM ANY AND ALL LIABILITY, REAL OR ALLEGED, IN CONNECTION WITH THE PERFORMANCE OF WORK ON THIS PROJECT, EXCEPTING LIABILITY ARISING FROM THE SOLE NEGLIGENCE OF DESIGN PROFESSIONAL.

REGISTERED PROFESSIONAL ENGINEER JEFFREY D. SIMS No. 46212 12/31/94 CIVIL STATE OF CALIFORNIA

PREPARED UNDER THE DIRECTION OF:
REGISTERED CIVIL ENGINEER NO. 46212
EXPIRATION DATE: 12/31/94 DATE: 4/15/92
APPROVED BY:

CITY BUSINESS TAX CERT. NO. 4994 EXP. DATE 12-31-93.
JFD
J.F. Davidson Associates, Inc.
ENGINEERING PLANNING SURVEYING ARCHITECTURE LANDSCAPE ARCHITECTURE
3880 Lemon Street, Suite 300, P.O. Box 493, Riverside, CA 92502, (714) 686-0844, FAX 714-686-5954
11200 S. Mt. Vernon Ave., Suite "D", Colton, CA 92324, (714) 825-1082
73-080 El Paseo, Suite 106, Palm Desert, CA 92260, (619) 346-5691, FAX 619-340-0529

SCALE: AS SHOWN
DATE: JUNE, 1991

BENCH MARK: P.K. NAIL & TAG IN BASE OF LIGHT STANDARD IN MEDIAN STRIP OF COUNTRY CLUB DRIVE WEST OF C.L. CANYON CREST DRIVE. ELEV. = 1068.06

MARK	REVISIONS	APPR.	DATE

DESIGNED BY L.M. DRAWN BY J.A.A. CHECKED BY J.D.S.

CITY OF RIVERSIDE, CALIFORNIA
DEPARTMENT OF PUBLIC WORKS

APPROVED BY	BY	DATE
PRINCIPAL ENGINEER		
PARK DEPARTMENT	JM	6/2/92
TRAFFIC DIVISION		
CHIEF P. W. ENGR.		

APPROVED BY
DIRECTOR OF PUBLIC WORKS
DATE

TRACT 25486-2
STREET IMPROVEMENT PLANS
TITLE SHEET
FOR: CHRISTIAN BERGUM & ASSOCIATES

PROJECT NO. 9112517
R-3288
SHEET 1 OF 3
FILE NO.: 9112517

PC 3426-S

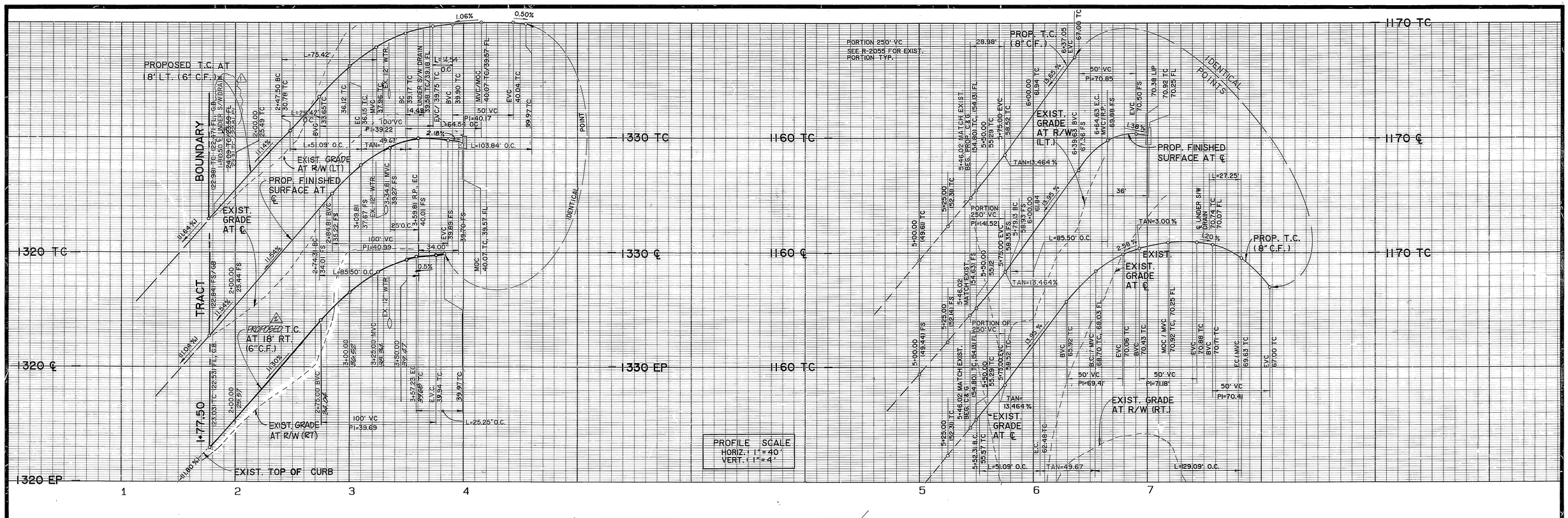

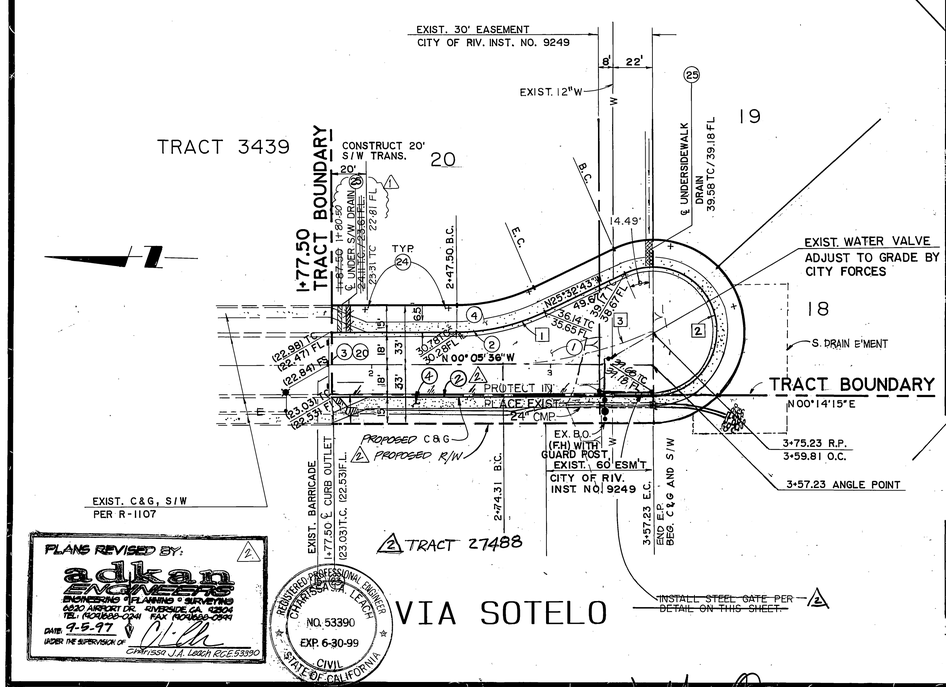

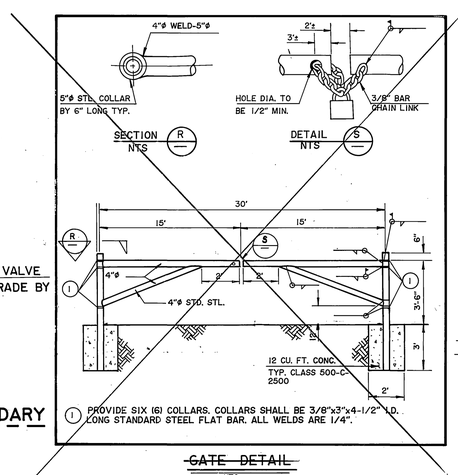

CURVE DATA				
NO.	Δ	R	L	T
1	25°27'07"	115.00'	51.09'	25.97'
2	205°27'07"	36.00'	129.09'	–
3	24°29'41"	200.00'	85.50'	43.41'

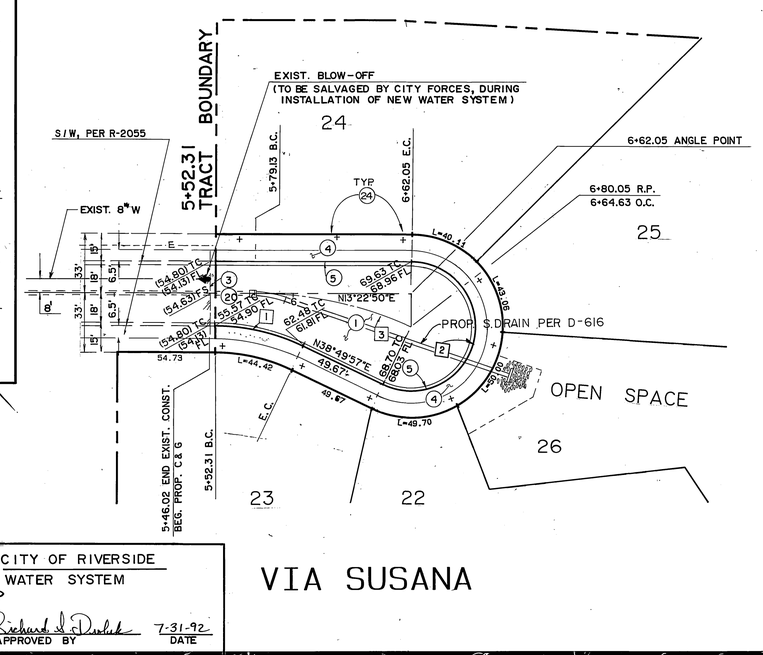

CITY OF RIVERSIDE
WATER SYSTEM

Richard L. Durlak 7-31-92
APPROVED BY DATE

PLANS REVISED BY: adkan ENGINEERS
ENGINEERING • PLANNING • SURVEYING
6330 AIRPORT DR. RIVERSIDE, CA. 92504
TEL. (909)689-0241 FAX (909)689-0594
DATE 9-5-97
UNDER THE SUPERVISION OF CHRISTIAN J.A. LEACH R.C.E. 53390

REGISTERED PROFESSIONAL ENGINEER CHRISTIAN J.A. LEACH NO. 53390 EXP. 6-30-99 CIVIL STATE OF CALIFORNIA

VIA SUSANA

Underground Service Alert
CALL BEFORE YOU DIG
Call: TOLL FREE
1-800
422-4133
TWO WORKING DAYS BEFORE YOU DIG

PRIVATE ENGINEERING NOTE

CONSTRUCTION CONTRACTOR AGREES THAT IN ACCORDANCE WITH GENERALLY ACCEPTED CONSTRUCTION PRACTICES, CONSTRUCTION CONTRACTOR WILL BE REQUIRED TO ASSUME SOLE AND COMPLETE RESPONSIBILITY FOR JOB SITE CONDITIONS DURING THE COURSE OF CONSTRUCTION OF THE PROJECT, INCLUDING SAFETY OF ALL PERSONS AND PROPERTY; THAT THIS REQUIREMENT SHALL BE MADE TO APPLY CONTINUOUSLY AND NOT BE LIMITED TO NORMAL WORKING HOURS, AND CONSTRUCTION CONTRACTOR FURTHER AGREES TO DEFEND, INDEMNIFY AND HOLD DESIGN PROFESSIONAL HARMLESS FROM ANY AND ALL LIABILITY, REAL OR ALLEGED, IN CONNECTION WITH THE PERFORMANCE OF WORK ON THIS PROJECT, EXCEPTING LIABILITY ARISING FROM THE SOLE NEGLIGENCE OF DESIGN PROFESSIONAL.

REGISTERED PROFESSIONAL ENGINEER JEFFREY D. SMITH No. 46212 12/31/94 CIVIL STATE OF CALIFORNIA

PREPARED UNDER THE DIRECTION OF:
REGISTERED CIVIL ENGINEER NO. 46212
EXPIRATION DATE: 12/31/94 DATE: 4/15/92
APPROVED BY:

SCALE: 1"=40'
DATE: JUNE, 1991

JFD
CITY BUSINESS TAX CERT. NO. 4994 EXP. 12-31-93
J.F. Davidson Associates, Inc.
ENGINEERING PLANNING SURVEYING ARCHITECTURE LANDSCAPE ARCHITECTURE
3880 Lemon Street, Suite 300, P.O. Box 493, Riverside, CA 92502, (714) 686-0844, FAX 714-686-5954
11200 S. Mt. Vernon Ave., Suite "D", Colton, CA 92324, (714) 825-1082
73-080 El Paseo, Suite 106, Palm Desert, CA 92260, (619) 346-5691, FAX 619-340-0529

BENCH MARK: P.K. NAIL & TAG IN BASE OF LIGHT STANDARD IN MEDIAN STRIP OF COUNTRY CLUB DRIVE 60'+ WEST OF C/L 'CANYON CREST DRIVE. ELEV. = 1068.06

MARK	REVISIONS	APPR.	DATE
2	REVISED NUTURE CURB TO PROPOSED CURB V.I.S. SOTELO B.P. 9-5-97		9/8/97
1	REVISED UNDERS/W DRAIN LOCATION 6 in. 11-6-96		11/06/96

DESIGNED BY L.M. DRAWN BY C.M.F. CHECKED BY J.D.S.

CITY OF RIVERSIDE, CALIFORNIA
DEPARTMENT OF PUBLIC WORKS

APPROVED BY	BY	DATE
PRINCIPAL ENGINEER		7/16/93
PARK DEPARTMENT		6/22/93
TRAFFIC DIVISION		7-16-93
CHIEF P.W. ENGR.		7-21-93
		7/22/93

APPROVED BY
DIRECTOR OF PUBLIC WORKS
DATE 7/22/93

TRACT 25486-2
STREET PLAN & PROFILE
VIA SOTELO, VIA SUSANA

FOR: CHRISTIAN BERGUM & ASSOCIATES

PROJECT NO. 9112517
R-3288
SHEET 2 OF 3
FILE NO.: 9112517

PC 3426-S

INDEXED 9-1-93 GH

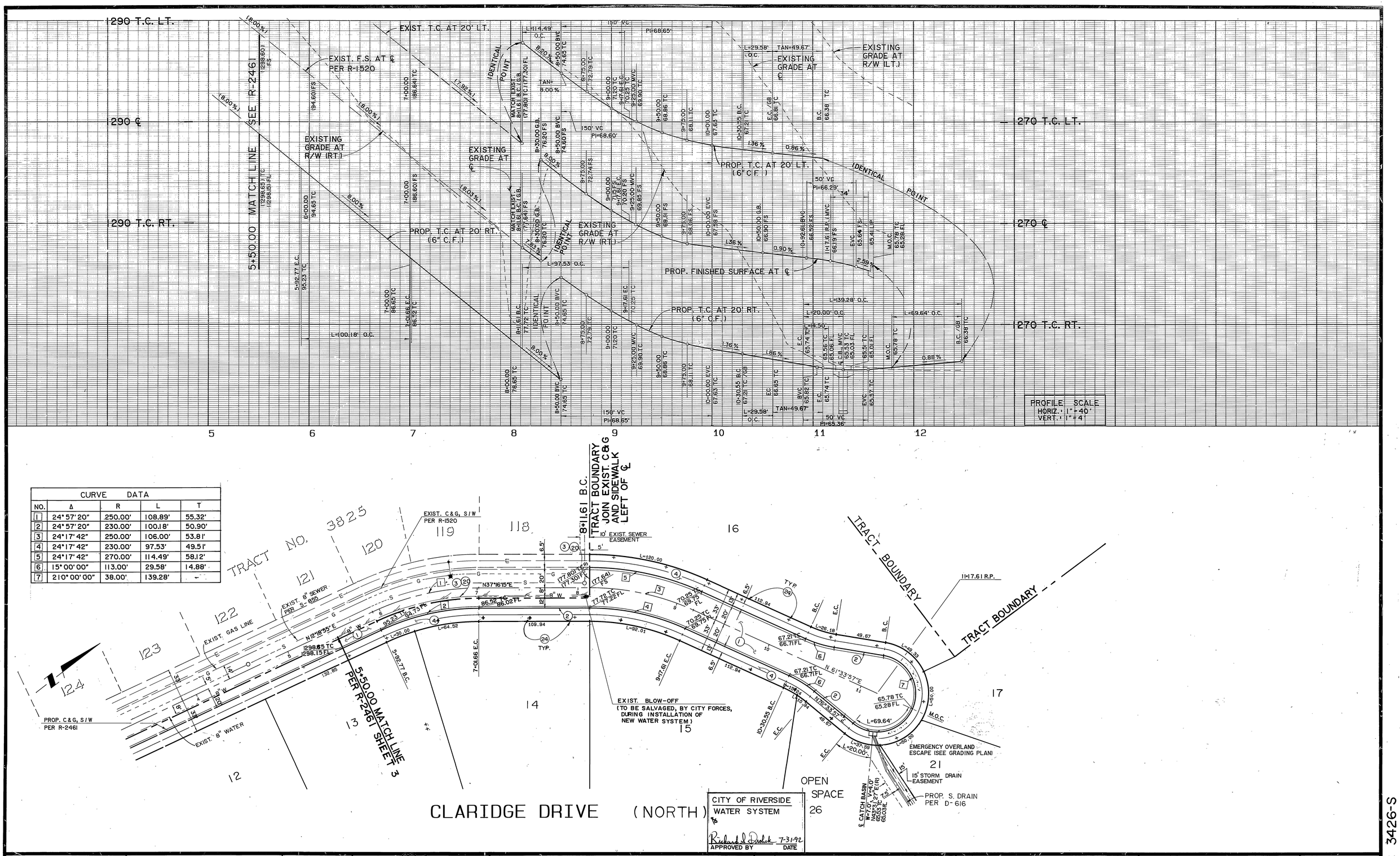

CURVE DATA				
NO.	Δ	R	L	T
1	24° 57' 20"	250.00'	108.89'	55.32'
2	24° 57' 20"	230.00'	100.18'	50.90'
3	24° 17' 42"	250.00'	106.00'	53.81'
4	24° 17' 42"	230.00'	97.53'	49.51'
5	24° 17' 42"	270.00'	114.49'	58.12'
6	15° 00' 00"	113.00'	29.58'	14.88'
7	210° 00' 00"	38.00'	139.28'	—

CITY OF RIVERSIDE
WATER SYSTEM
Richard L. Drulak 7-31-92
APPROVED BY DATE

Underground Service Alert
CALL BEFORE YOU DIG
Call: TOLL FREE
1-800
422-4133
TWO WORKING DAYS BEFORE YOU DIG

PRIVATE ENGINEERING NOTE

CONSTRUCTION CONTRACTOR AGREES THAT IN ACCORDANCE WITH GENERALLY ACCEPTED CONSTRUCTION PRACTICES, CONSTRUCTION CONTRACTOR WILL BE REQUIRED TO ASSUME SOLE AND COMPLETE RESPONSIBILITY FOR JOB SITE CONDITIONS DURING THE COURSE OF CONSTRUCTION OF THE PROJECT, INCLUDING SAFETY OF ALL PERSONS AND PROPERTY; THAT THIS REQUIREMENT SHALL BE MADE TO APPLY CONTINUOUSLY AND NOT BE LIMITED TO NORMAL WORKING HOURS, AND CONSTRUCTION CONTRACTOR FURTHER AGREES TO DEFEND, INDEMNIFY AND HOLD DESIGN PROFESSIONAL HARMLESS FROM ANY AND ALL LIABILITY, REAL OR ALLEGED, IN CONNECTION WITH THE PERFORMANCE OF WORK ON THIS PROJECT, EXCEPTING LIABILITY ARISING FROM THE SOLE NEGLIGENCE OF DESIGN PROFESSIONAL.

REGISTERED PROFESSIONAL ENGINEER JEFFREY D. SMITH No. 46212 CIVIL 12/31/92 STATE OF CALIFORNIA

PREPARED UNDER THE DIRECTION OF:
REGISTERED CIVIL ENGINEER NO. 46212
EXPIRATION DATE: 12/31/94 DATE: 4/15/92

APPROVED BY:

SCALE: 1"=40'
DATE: JUNE, 1991

CITY BUSINESS TAX CERT. NO. 4994 EXP. 12-31-93
J.F. Davidson Associates, Inc.
ENGINEERING PLANNING SURVEYING ARCHITECTURE LANDSCAPE ARCHITECTURE
3880 Lemon Street, Suite 300, P.O. Box 493, Riverside, CA 92502, (714) 686-0844, FAX 714-686-5954
11200 S. Mt. Vernon Ave., Suite "D", Colton, CA 92324, (714) 825-1082
73-080 El Paseo, Suite 106, Palm Desert, CA 92260, (619) 346-5691, FAX 619-340-0529

BENCH MARK: P.K. NAIL & TAG IN BASE OF LIGHT STANDARD IN MEDIAN STRIP OF COUNTRY CLUB DRIVE 60'± WEST OF C/L CANYON CREST DRIVE. ELEV. = 1068.06

MARK	REVISIONS	APPR.	DATE

DESIGNED BY L.M. DRAWN BY C.M.F. CHECKED BY J.D.S.

CITY OF RIVERSIDE, CALIFORNIA
DEPARTMENT OF PUBLIC WORKS

APPROVED BY	BY	DATE
PRINCIPAL ENGINEER		7/10/93
PARK DEPARTMENT		6-22-93
TRAFFIC DIVISION		7-16-93
CHIEF P.W. ENGR.		7/14/93 7/20/93

APPROVED BY
DIRECTOR OF PUBLIC WORKS
DATE 7/22/93

TRACT 25486-2
STREET PLAN & PROFILE
CLARIDGE DRIVE
STA. 5+50 (N) TO 11+17.61 (N)
FOR: CHRISTIAN BERGUM & ASSOCIATES

PROJECT NO. 9112517
R-3288
SHEET 3 OF 3
FILE NO.: 9112517

PC 3426-S

INDEXED 9-1-93 GH