STREET IMPROVEMENT PLANS
FOR
TRACT 27288

GENERAL NOTES

1. IT SHALL BE THE RESPONSIBILITY OF THE CONTRACTOR TO CLEAR THE RIGHT-OF-WAY IN ACCORDANCE WITH THE PROVISIONS OF LAW AS IT AFFECTS EACH UTILITY INCLUDING IRRIGATION LINES AND APPURTENANCES AND AT NO COST TO THE CITY.
2. CONSTRUCTION SHALL BE IN ACCORDANCE WITH THE CITY OF RIVERSIDE DEPARTMENT OF PUBLIC WORKS, STANDARD DRAWINGS, STANDARD DRAWING NO. 10 AND THE STANDARD SPECIFICATIONS FOR PUBLIC WORKS CONSTRUCTION, CURRENT EDITION.
3. THE PRIVATE ENGINEER SIGNING THESE PLANS IS RESPONSIBLE FOR ASSURING THE ACCURACY AND ACCEPTABILITY OF THE WORK HEREON. IN THE EVENT OF DISCREPANCIES ARISING DURING CONSTRUCTION, THE PRIVATE ENGINEER SHALL BE RESPONSIBLE FOR DETERMINING AN ACCEPTABLE SOLUTION AND REVISING THE PLANS FOR APPROVAL BY THE CITY.
4. QUANTITIES SHOWN ARE FOR INFORMATION ONLY AND THE CITY OF RIVERSIDE IS NOT RESPONSIBLE FOR THEIR ACCURACY.
5. THE DEVELOPER SHALL BE RESPONSIBLE FOR PRESERVING OR RE-ESTABLISHING AND REFERENCING SURVEY MONUMENTS DESTROYED, DISTURBED OR BURIED AS A RESULT OF CONSTRUCTION SHOWN HEREON.
6. SEE "STREET LIGHTING PLANS" FOR QUANTITY AND LOCATION OF REQUIRED STREET LIGHTS.
7. ALL FLAGGED ELEVATIONS SHALL BE STAKED IN THE FIELD BY THE PRIVATE ENGINEER.
8. TRIM EDGE OF EXISTING PAVEMENT WHERE NEW PAVEMENT JOINS TO A SMOOTH, STRAIGHT LINE. CONSTRUCT MATCH-UP PAVING AS SHOWN ON PLAN AND OVERLAY PAVING AS DIRECTED IN THE FIELD TO PRODUCE A SMOOTH SECTION.
9. CONSTRUCT DRIVEWAY APPROACHES PER STD. DWG. 302. EXACT SIZE AND LOCATION TO BE STAKED BY THE PRIVATE ENGINEER PRIOR TO CONSTRUCTION OF THE CURB & GUTTER *AND AS APPROVED BY THE TRAFFIC ENGINEER.*
10. THE SUBDIVIDER SHALL ARRANGE FOR A SOIL TEST TO BE MADE BY A SOILS ENGINEER AFTER THE STREETS HAVE BEEN PREPARED TO ROUGH GRADE AND PRIOR TO CURB AND GUTTER CONSTRUCTION. DEPTH OF BASE MATERIAL AND A.C. PAVING SHALL BE DETERMINED BY THE CITY OF RIVERSIDE DESIGN STANDARDS AND TEST PROCEDURES.
11. THE DEVELOPER AND/OR CONTRACTOR SHALL CONTACT THE STREET DIVISION (351-6127) TO PICK UP ANY EXISTING STD. 180 BARRICADES THAT ARE BEING REMOVED. THE CITY'S INSPECTOR WILL MAKE THE FINAL DETERMINATION ON WHETHER A BARRICADE CAN BE RELOCATED.
12. ON ALL AREAS WITHIN PUBLIC RIGHT-OF-WAY WHERE THE FILL IS ONE (1) FOOT OR GREATER, A LETTER WILL BE REQUIRED FROM THE SOILS ENGINEER, CERTIFYING THE COMPACTION OF THE FILL BELOW SUBGRADE, PRIOR TO ISSUANCE OF THE CONSTRUCTION PERMIT/CUT SHEETS.
13. ALL TRAFFIC SIGNS SHALL BE INSTALLED PRIOR TO OPENING THE STREETS TO TRAFFIC.
14. ANY TRAFFIC CONTROL STRIPING OBLITERATED AND/OR BADLY WORN DURING CONSTRUCTION SHALL BE RESTORED BY THE CONTRACTOR WITHIN FIVE DAYS AFTER NOTIFICATION FROM THE CITY INSPECTORS.
15. FINAL STRIPING FOR TRAFFIC CONTROL AND/OR PAVEMENT MARKING TO BE THE RESPONSIBILITY OF THE DEVELOPER.
16. THE CONTRACTOR SHALL CALL IN A LOCATION REQUEST TO UNDERGROUND SERVICE ALERT (USA), PHONE NO. 1-800-422-4133, TWO WORKING DAYS BEFORE DIGGING. NO CONSTRUCTION PERMIT WILL BE ISSUED BY THE PUBLIC WORKS DEPARTMENT INVOLVING EXCAVATION FOR UNDERGROUND FACILITIES UNLESS THE APPLICANT HAS BEEN PROVIDED AN INQUIRY IDENTIFICATION NUMBER BY U.S.A.
17. ALL OVERHANGING TREE LIMBS THAT ARE LESS THAN 14' ABOVE THE STREET GRADE SHALL BE TRIMMED BACK.
18. IN PAVEMENT OVERLAY AREAS, DISTRESSED EXISTING PAVEMENT SHALL BE REMOVED AND REPLACED AS DIRECTED THE BY INSPECTOR PRIOR TO OVERLAYING WITH A.C. PAVINGS.
19. THE CONTRACTOR SHALL COORDINATE TRENCHING FOR CABLE TELEVISION WITH OTHER TRENCHING WITHIN THE SUBDIVISION.
20. THE SEWER CONTRACTOR SHALL ADJUST MANHOLES TO FINAL GRADE AFTER PAVING IS COMPLETED.
21. RELOCATION FEE TO BE PAID BY DEVELOPER TO PUBLIC UTILITIES DEPT. PRIOR TO RELOCATION OF ELECTRICAL FACILITIES.

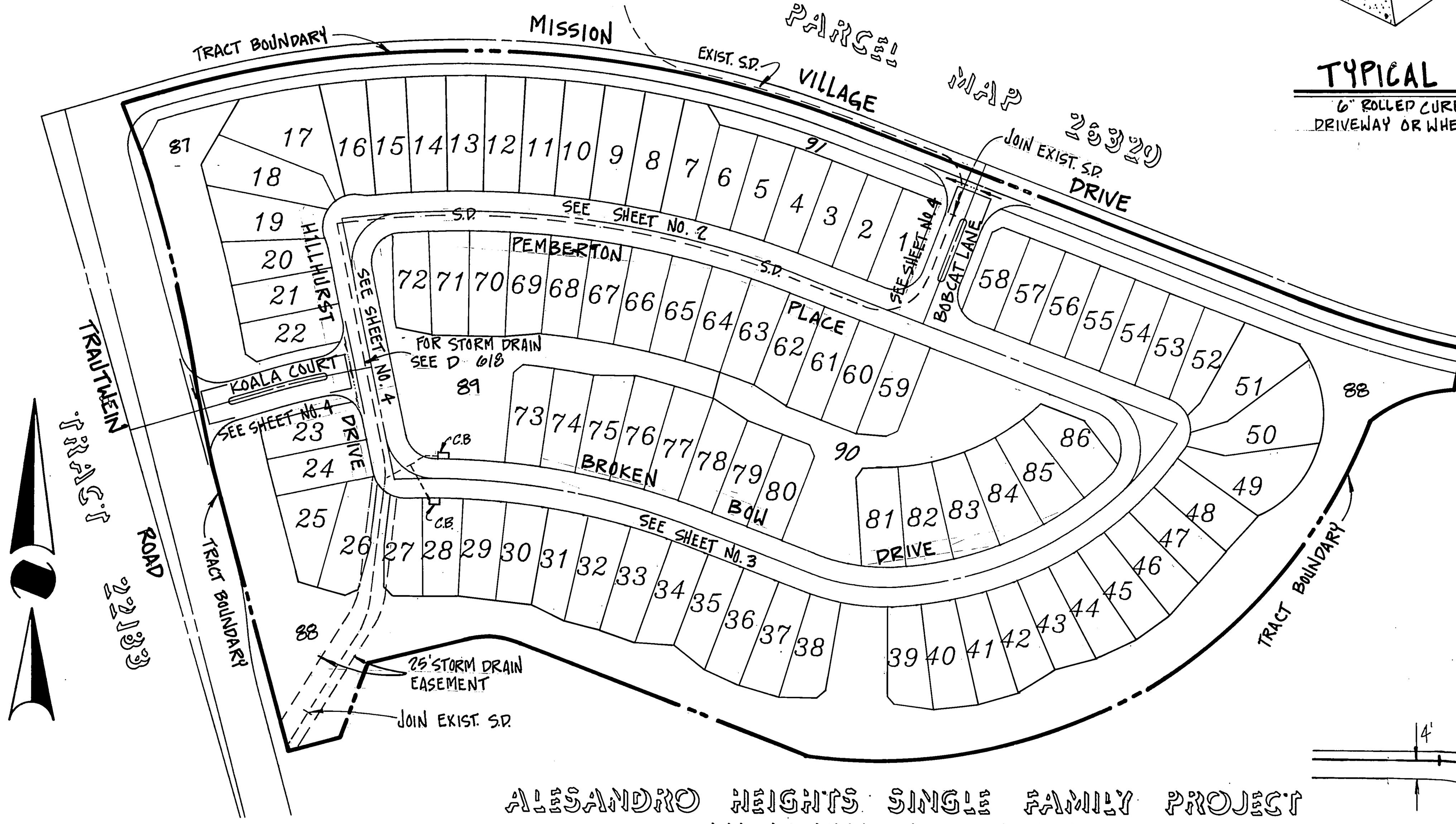

ALESANDRO HEIGHTS SINGLE FAMILY PROJECT
TENTATIVE TRACT NO. 27289

INDEX MAP

SCALE: 1"=100'

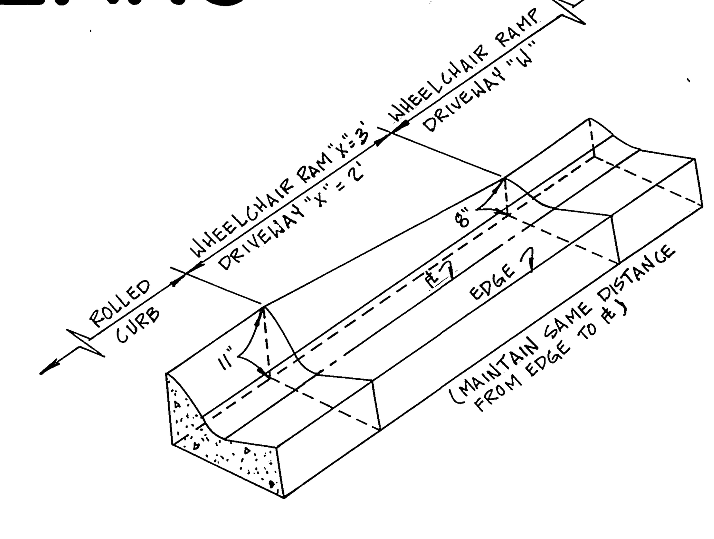

TYPICAL TRANSITION

6" ROLLED CURB AND GUTTER TO DRIVEWAY OR WHEELCHAIR RAMP DEPRESSION

* CONSTRUCTION NOTES AND QUANTITY ESTIMATES

ITEM	DESCRIPTION	QUANTITY
1	CONSTRUCT A.C. OVER C.A.B. PER TYP. SECTION	65,600 S.F.
2	CONSTRUCT 6" CURB & GUTTER PER CITY OF RIVERSIDE STD. DWG. NO. 200 (TYPE I)	770 L.F.
3	CONSTRUCT P.C.C. CURB SIDEWALK (.33' THICK) PER TYPICAL SECTION	10,000 S.F.
4	CONSTRUCT DRIVEWAY PER DETAILS HEREON (W=16')	3,500 S.F.
5	CONSTRUCT WHEELCHAIR RAMP PER CAL TRANS STD. NO. N8-B CASE C	4 EA.
6	INSTALL STREET NAME SIGN PER CITY OF RIVERSIDE STD. DWG. NO. 662	5 EA.
7	INSTALL R-1 STOPSIGN PER CITY OF RIVERSIDE STD. DWG. NO. 662 & 666	4 EA.
8	CONSTRUCT 6" CURB ONLY PER CITY OF RIVERSIDE STD. DWG. NO. 200 (TYPE II)	325 L.F.
9	CONSTRUCT CROSS GUTTER PER CITY OF RIVERSIDE STD. DWG. NO. 220 (WIDTH PER PLAN)	750 S.F.
11	INSTALL E7 ("KEEP RIGHT" SYMBOL) PER CAL TRANS TRAFFIC MANUAL	4 EA.
12	CONST. 6" ROLLED CURB AND GUTTER PER DETAIL HEREON	2,970 L.F.
13	CONST. TRANSITION FROM 6" CURB & GUTTER TO 6" ROLLED CURB & GUTTER PER DETAIL HEREON	100 L.F.
14	CONST. 6" REVERSE FRONTAGE WALL PER DETAIL ON SHEET 5	69 L.F.
15	CONST. 2' BLOCK 4' TUBULAR STEEL WALL PER DETAIL ON SHEET 5	161 L.F.
16	CONST. DECORATIVE INTERLOCKING PAVING PER DETAIL ON SHEET 5	2 EA.

* QUANTITIES SHOWN HEREON ARE FOR PERMIT AND/OR BONDING PURPOSES ONLY AND SHALL NOT BE USED FOR BIDDING, CONTRACTOR SHALL DETERMINE HIS OWN QUANTITIES AND BID A COMPLETE JOB.

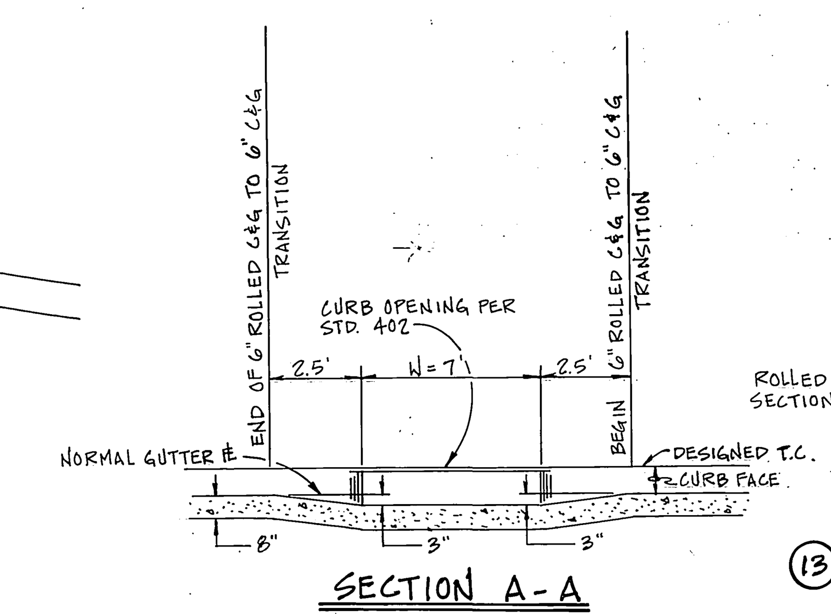

SECTION A-A

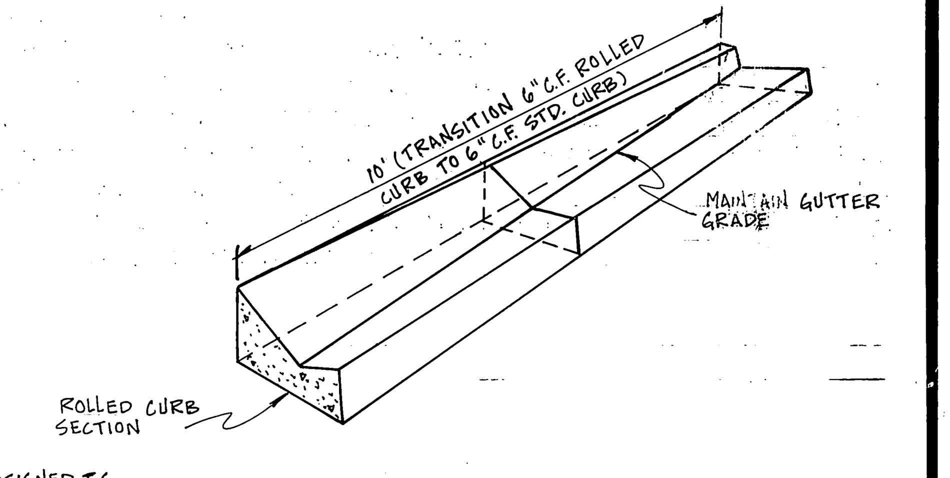

13 6" CURB & GUTTER TO 6" ROLLED CURB & GUTTER TRANSITION DETAIL

N.T.S.

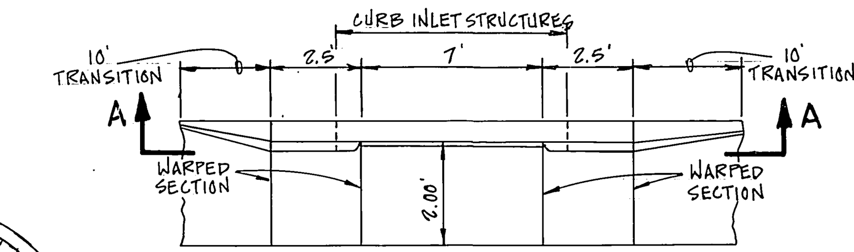

TYPICAL TRANSITION

6" CURB AND GUTTER TO CATCH BASIN AND LOCAL DEPRESSION

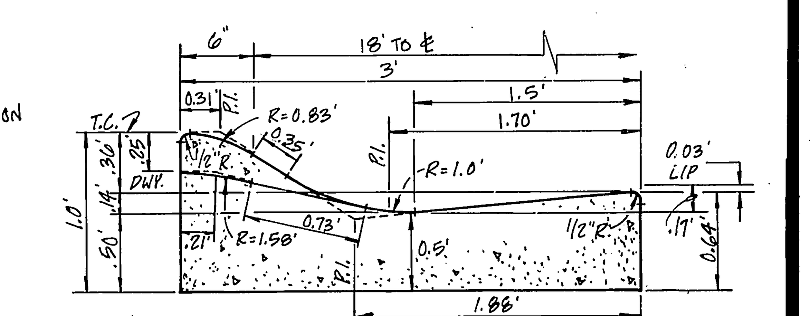

12 ROLLED CURB DETAIL

N.T.S.

STREET NAME & TRAFFIC SIGN SCHEDULE INSTALL PER CITY OF RIVERSIDE STD. DWG. No. 662 & STD. DWG. NO. 666					
A	HILLHURST DRIVE	7600	E	HILLHURST DRIVE	7700
	KOALA COURT	19000		BROKEN BOW DRIVE	19000
B	PEMBERTON PLACE	19000			
	HILLHURST DRIVE	7500			
C	PEMBERTON PLACE	19170			
	BOBCAT LANE	7500			
D	BROKEN BOW DRIVE	19300			
	PEMBERTON PLACE	19300			

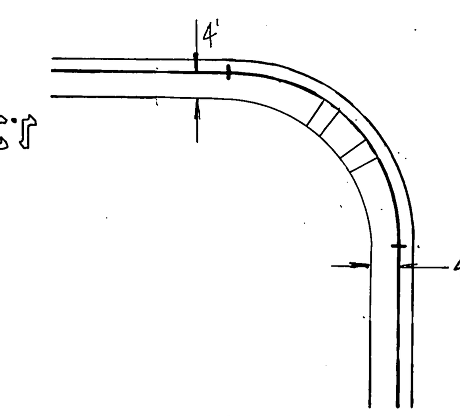

5 WHEELCHAIR RAMP DETAIL

PER CALTRANS STD. NO. N8-B, CASE C
N.T.S.

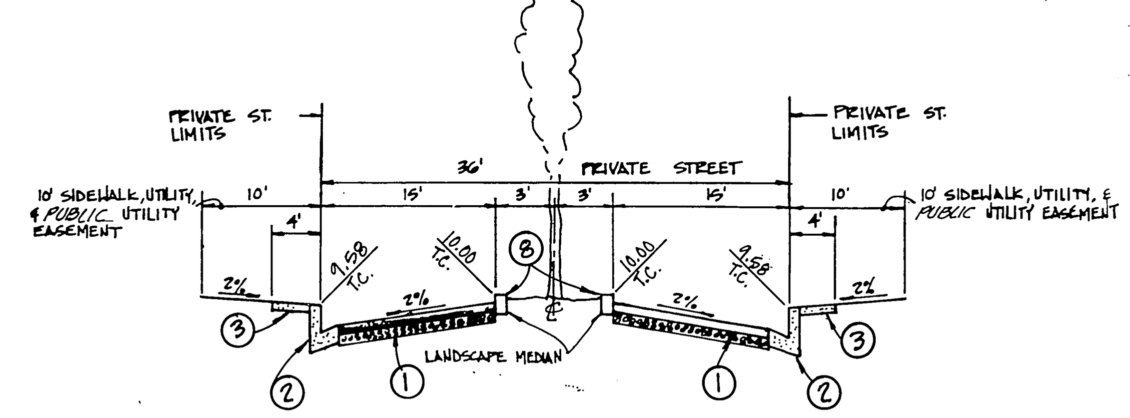

ENTRY WAY TYPICAL SECTION

N.T.S.

T.I. = 5

⚠ BOBCAT LANE: 0.21' AC/0.50' CAB, R=35 } PER SR 1476
KOALA COURT: 0.21' AC/0.33' CAB, R=45 }

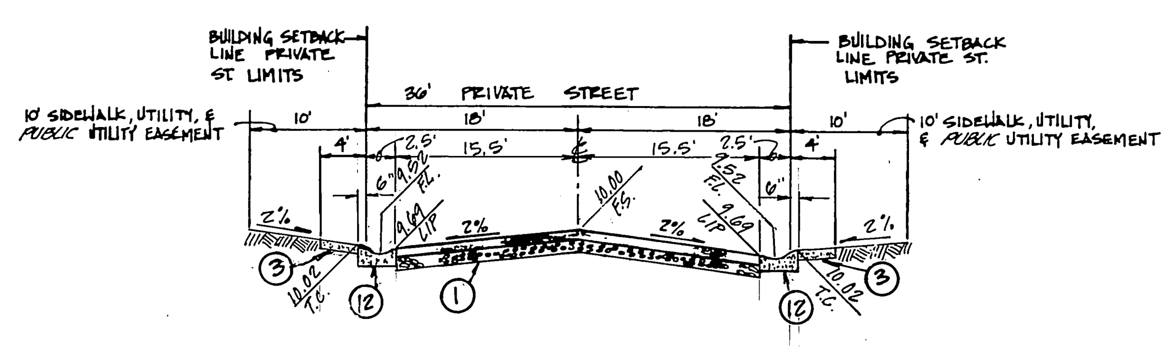

PRIVATE STREET TYPICAL SECTION

N.T.S.

T.I. = 5

⚠ CONST. 0.21' AC/0.33' CAB, R=45 (PER SR 1476)

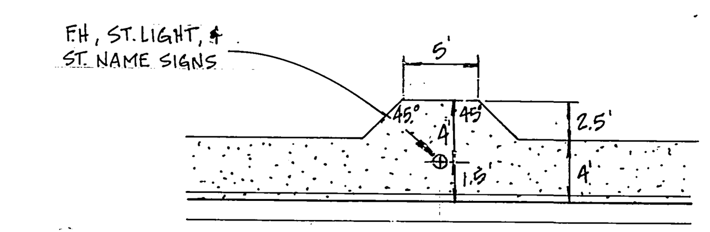

MODIFIED SIDEWALK JOG DETAIL

NTS

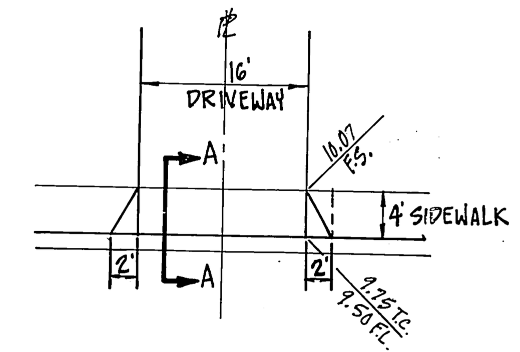

MODIFIED DRIVEWAY DETAIL

N.T.S.

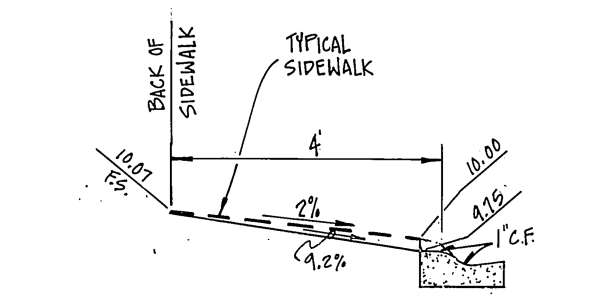

SECTION A-A

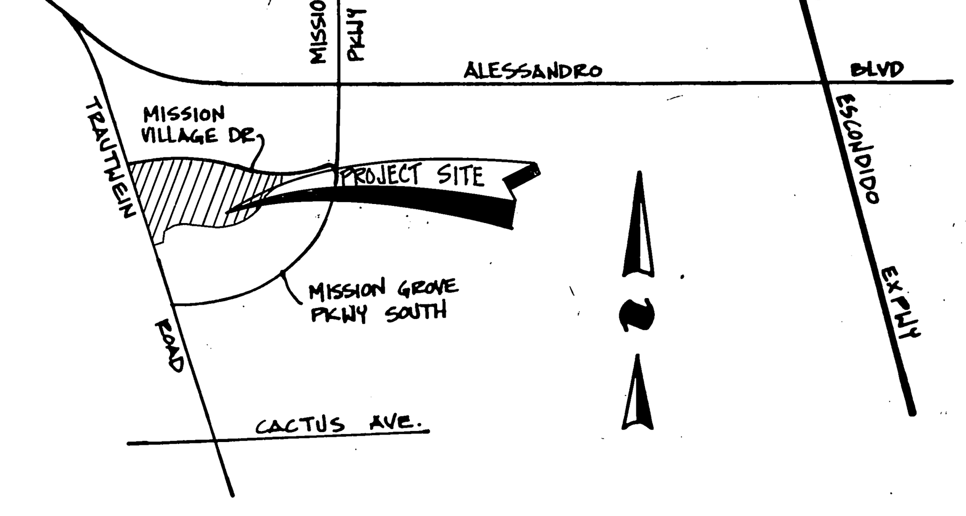

VICINITY MAP

N.T.S.

0' 100' 200' 300' 400'
SCALE IN FEET

PRIVATE ENGINEER'S NOTICE TO CONTRACTORS

THE EXISTENCE AND LOCATION OF ANY UNDERGROUND UTILITIES OR STRUCTURES SHOWN ON THESE PLANS WERE OBTAINED BY A SEARCH OF AVAILABLE RECORDS AND TO THE BEST OF OUR KNOWLEDGE, THERE ARE NO EXISTING UTILITIES EXCEPT, THOSE SHOWN ON THIS PLAN. THE CONTRACTOR IS REQUIRED TO TAKE DUE PRECAUTIONARY MEASURES TO PROTECT THE UTILITIES SHOWN, AND ANY OTHER LINES OR STRUCTURES NOT SHOWN ON THESE PLANS, AND IS RESPONSIBLE FOR THE PROTECTION OF, AND ANY DAMAGE TO THESE LINES OR STRUCTURES.

CONSTRUCTION CONTRACTOR AGREES THAT IN ACCORDANCE WITH GENERALLY ACCEPTED CONSTRUCTION PRACTICES, CONSTRUCTION CONTRACTOR WILL BE REQUIRED TO ASSUME SOLE AND COMPLETE RESPONSIBILITY FOR JOB SITE CONDITIONS DURING THE COARSE OF CONSTRUCTION OF THIS PROJECT, INCLUDING SAFETY OF ALL PERSONS AND PROPERTY; THAT THIS REQUIREMENT SHALL APPLY CONTINUOUSLY AND NOT BE LIMITED TO NORMAL WORKING HOURS, AND CONSTRUCTION CONTRACTOR FURTHER AGREE TO, DEFEND, INDEMNIFY, AND HOLD DESIGN PROFESSIONAL AND OWNER HARMLESS FROM ANY AND ALL LIABILITY, REAL OR ALLEGED, IN CONNECTION WITH THE PERFORMANCE OF WORK ON THIS PROJECT.

THE CONTRACTOR SHALL BE RESPONSIBLE TO REPORT DISCREPANCIES IN PLANS AND/OR FIELD CONDITIONS IMMEDIATELY TO THE DESIGN ENGINEER FOR RESOLUTION PRIOR TO CONSTRUCTION, AND SHALL BE RESPONSIBLE FOR DISCREPANCIES NOT SO REPORTED AND RESOLVED.

BENCHMARK: E8-A
P.K. NAIL AND TAG ON TOP OF 35'X50'X20' HIGH GRANITE BOULDER, 100' W'LY OF TRAUTWEIN RD. AND 0.3' MI. N'LY OF WOOD RD. FB735/74.
ELEV. = 1588.453

Underground Service Alert
Call: TOLL FREE
1-800
422-4133
TWO WORKING DAYS BEFORE YOU DIG

REGISTERED PROFESSIONAL ENGINEER
RICHARD A. SCIANNI
25917
EXPIRES 12/31/93
CIVIL
STATE OF CALIFORNIA

REGISTERED PROFESSIONAL ENGINEER
CHARLES O. HARTMAN
RCE 29243
Exp. 3/31/95
5-4-93
CIVIL
STATE OF CALIFORNIA

EXPIRES 1/01/93
BUSINESS TAX CERTIFICATE # 035973

PACIFIC BELL TELEPHONE CO.	REVIEWED BY: [signature]	DATE: 8-24-92
CENCOM CABLE	REVIEWED BY: [signature]	DATE: 8/26/92
SOUTHERN CALIFORNIA GAS COMPANY	REVIEWED BY: [signature]	DATE: 8-20-92
CITY OF RIVERSIDE - PUBLIC UTILITIES ELECTRIC	APPROVED BY: William F. Mason	DATE: 10/7/92

REVIEWED BY:
WESTERN MUNICIPAL WATER DISTRICT
SHEET 1 THRU 4
[signature]
PRINCIPAL ENGINEER, R.C.E. 21643
DATE: 11/5/92

CSL ENGINEERING, INC.
2900 ADAMS STREET, SUITE A25
RIVERSIDE, CA. 92504 (714)785-5122
PREPARED UNDER THE SUPERVISION OF:
Richard A. Scianni 5-12-92
RICHARD A. SCIANNI R.C.E. 25917 DATE

MARK	REVISIONS	APPR.	DATE
⚠	ADDED PAVING SECTIONS C.O.H. FRED	WW	3/4/93

DESIGNED BY V.M.S. DRAWN BY R.L.M. CHECKED BY J.J.L.

CITY OF RIVERSIDE
PUBLIC WORKS DEPARTMENT

APPROVED BY	DATE	BY
PRINCIPAL ENGINEER	12/15/92	[initials]
PARK DEPARTMENT	—	
TRAFFIC DIVISION	12-11-92	[initials]
CHIEF P. W. ENGINEER	12-21-92	RMC
	12/18/92	WW

APPROVED BY [signature]
PUBLIC WORKS DIRECTOR
DATE 12.21.92

AS BUILT 7/18/95 RJM

STREET IMPROVEMENT PLANS
FOR
TRACT 27288
TITLE SHEET
PRIVATE STREETS
HORIZ. SCALE: 1" = 100'

ACCOUNT NO. R-3301

SHEET 1 OF 5

FRED

INDEXED 1-19-93 GH

JN 307

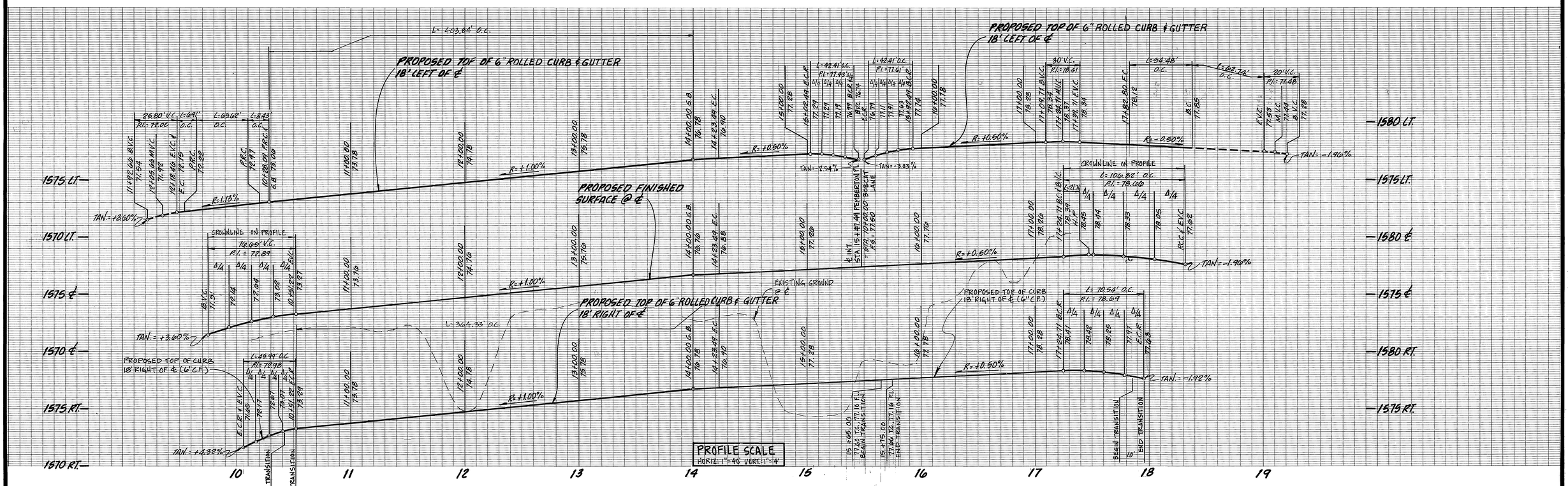

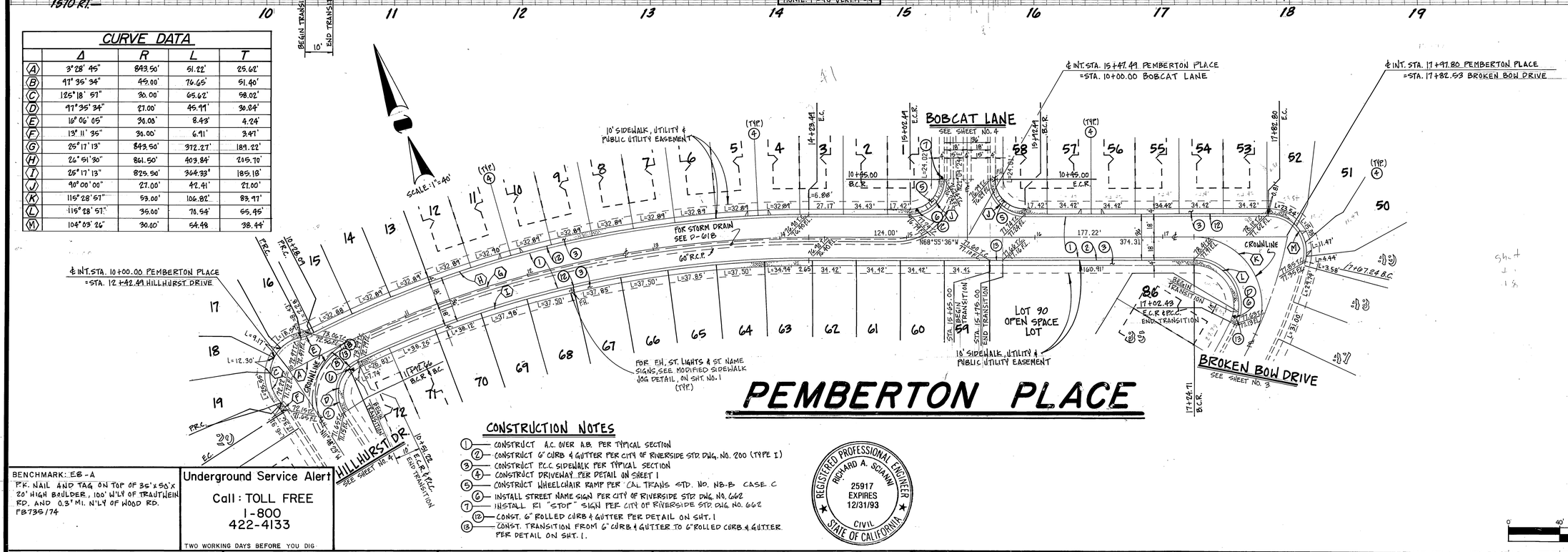

CURVE DATA

	Δ	R	L	T
(A)	3°28' 45"	843.50'	51.22'	25.62'
(B)	97° 35' 34"	45.00'	76.65'	51.40'
(C)	125°18' 57"	30.00'	65.62'	58.02'
(D)	97°35' 34"	27.00'	45.99'	30.84'
(E)	16° 06' 05"	30.00'	8.43'	4.24'
(F)	13° 11' 35"	30.00'	6.91'	3.47'
(G)	25° 17' 13"	843.50'	372.27'	189.22'
(H)	24° 51' 30"	861.50'	373.84'	189.70'
(I)	25° 17' 13"	825.50'	364.33'	185.18'
(J)	90° 00' 00"	27.00'	42.41'	27.00'
(K)	115° 28' 57"	53.00'	106.82'	83.97'
(L)	115° 28' 57"	35.00'	70.54'	55.45'
(M)	104° 03' 26"	30.00'	54.48	38.44'

CONSTRUCTION NOTES

1. CONSTRUCT A.C. OVER A.B. PER TYPICAL SECTION
2. CONSTRUCT 6" CURB & GUTTER PER CITY OF RIVERSIDE STD. DWG. NO. 200 (TYPE I)
3. CONSTRUCT P.C.C. SIDEWALK PER TYPICAL SECTION
4. CONSTRUCT DRIVEWAY PER DETAIL ON SHEET 1
5. CONSTRUCT WHEELCHAIR RAMP PER CAL TRANS STD. NO. M8-B CASE C
6. INSTALL STREET NAME SIGN PER CITY OF RIVERSIDE STD. DWG. NO. 662
7. INSTALL R1 "STOP" SIGN PER CITY OF RIVERSIDE STD. DWG. NO. 662
12. CONST. 6" ROLLED CURB & GUTTER PER DETAIL ON SHT. 1
13. CONST. TRANSITION FROM 6" CURB & GUTTER TO 6" ROLLED CURB & GUTTER PER DETAIL ON SHT. 1.

REGISTERED PROFESSIONAL ENGINEER — RICHARD A. SCIANNI — 25917 — EXPIRES 12/31/93 — CIVIL — STATE OF CALIFORNIA

0 40' 80' 120' 160'
SCALE IN FEET

AS BUILT 7/16/95 RJM

BENCHMARK: EB-A
P.K. NAIL AND TAG ON TOP OF 36"x 50"x 20' HIGH BOULDER, 100' W'LY OF TRAUTWEIN RD. AND 0.3' MI. N'LY OF WOOD RD.
FB 736/74

Underground Service Alert
Call: TOLL FREE
1-800
422-4133
TWO WORKING DAYS BEFORE YOU DIG

PACIFIC BELL TELEPHONE CO.
REVIEWED BY L.P. Hallgren DATE 8-24-92

CENCOM CABLE
REVIEWED BY [illegible] DATE 9/16/92

SOUTHERN CALIFORNIA GAS COMPANY
REVIEWED BY [illegible] DATE 8-20-92

CITY OF RIVERSIDE - PUBLIC UTILITIES ELECTRIC
APPROVED BY William J. Morrow DATE 11/3/92

CSL ENGINEERING, INC.
2900 ADAMS STREET, SUITE A25
RIVERSIDE, CA. 92504 (714) 785-5122
PREPARED UNDER THE SUPERVISION OF:
Richard A. Scianni 5-12-92
RICHARD A. SCIANNI R.C.E. 25917 DATE

MARK	REVISIONS	APPR.	DATE

DESIGNED BY V.M.S. DRAWN BY R.L.M. CHECKED BY J.J.L.

CITY OF RIVERSIDE
PUBLIC WORKS DEPARTMENT

APPROVED BY	DATE	BY
PRINCIPAL ENGINEER	12/5/91	
PARK DEPARTMENT	12-4-92	
TRAFFIC DIVISION	12-11-92	
CHIEF P. W. ENGINEER	12-11-92	
	12/16/92	

APPROVED BY Barry Bell
PUBLIC WORKS DIRECTOR
DATE 12/31/92

STREET IMPROVEMENT PLANS FOR
TRACT 27288
PEMBERTON PLACE
(PRIVATE STREET)

HORIZ. SCALE: 1" = 40' VERT. SCALE: 1" = 4'

ACCOUNT NO. R-3301

SHEET 2 OF 5

INDEXED 1-19-93 GH

JN 307

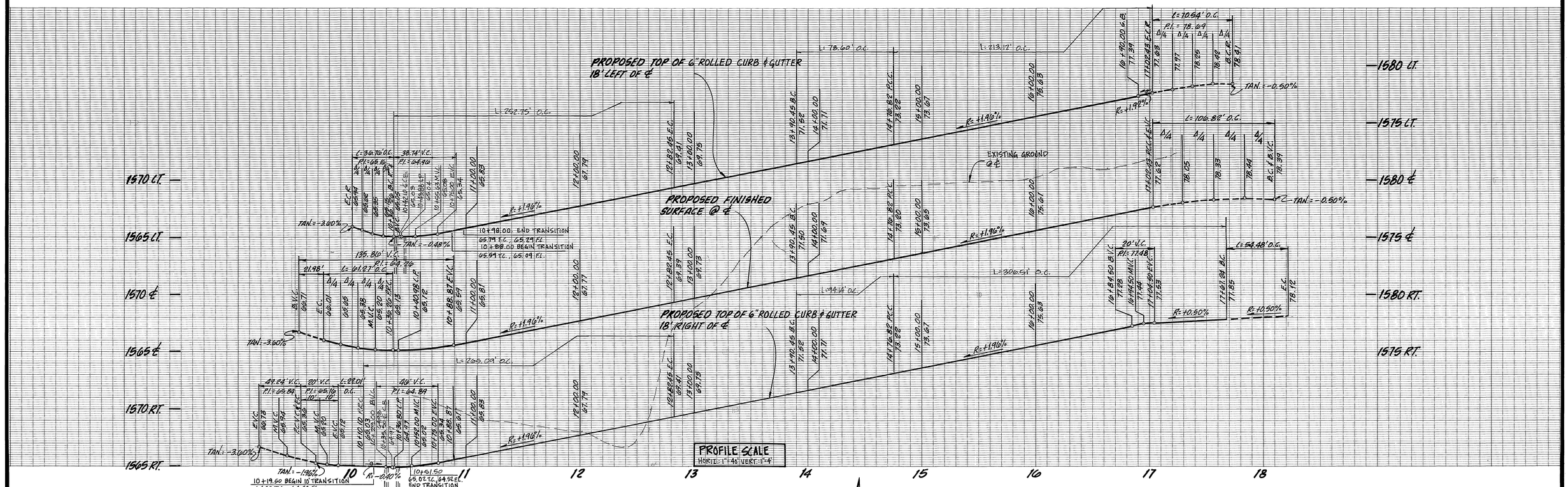

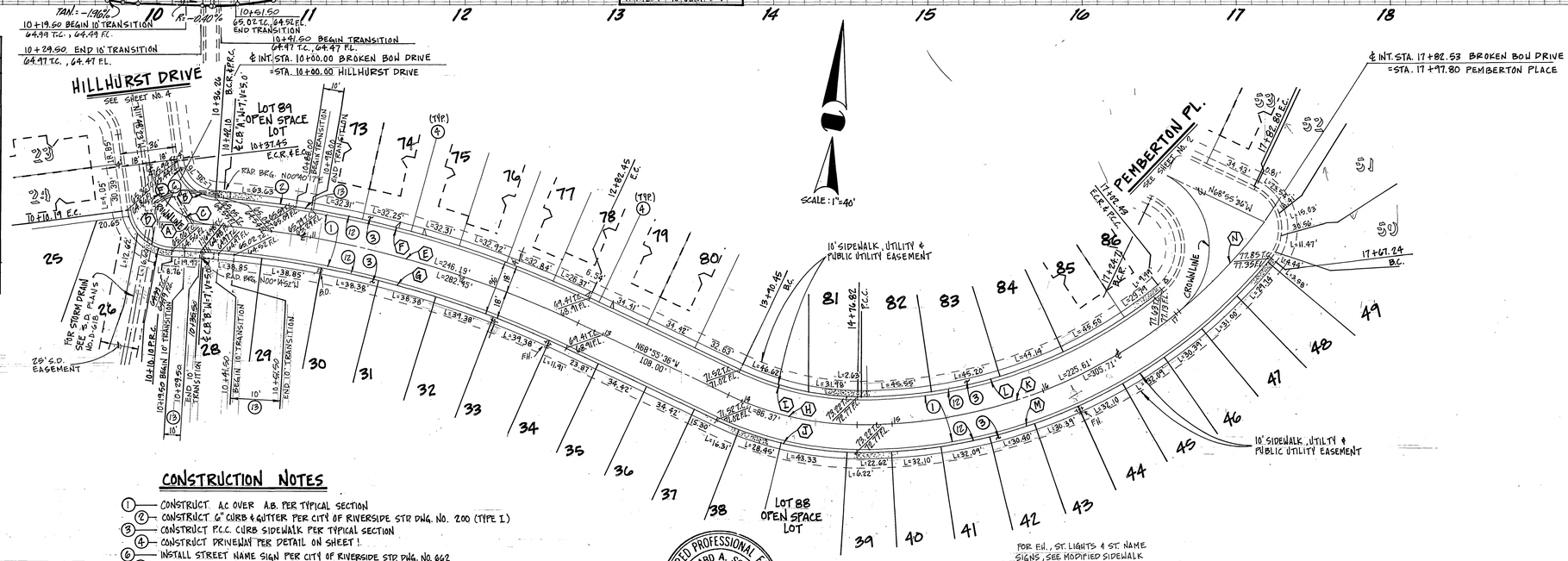

CURVE DATA

	Δ	R	L	T
(A)	3°04'41"	675.00'	36.26'	18.14'
(B)	78°01'03"	27.00'	36.76'	21.87'
(C)	78°01'03"	45.00'	61.27'	36.45'
(D)	80°14'18"	30.00'	42.01'	25.28'
(E)	20°53'50"	675.00'	246.19'	124.48'
(F)	20°53'50"	693.00'	252.75'	127.80'
(G)	23°07'05"	657.00'	265.09'	134.37'
(H)	24°44'35"	200.00'	86.37'	43.87'
(I)	24°44'35"	182.00'	78.60'	39.92'
(J)	24°44'35"	218.00'	94.14'	47.82'
(K)	91°46'28"	325.00'	225.61'	117.57'
(L)	39°46'28"	307.00'	213.12'	111.06'
(M)	51°11'59"	343.00'	306.51'	164.34'
(N)	14°07'16"	325.00'	80.10'	40.25'

CONSTRUCTION NOTES

1. CONSTRUCT AC OVER AB PER TYPICAL SECTION
2. CONSTRUCT 6" CURB & GUTTER PER CITY OF RIVERSIDE STD DWG. NO. 200 (TYPE I)
3. CONSTRUCT P.C.C. CURB SIDEWALK PER TYPICAL SECTION
4. CONSTRUCT DRIVEWAY PER DETAIL ON SHEET 1
6. INSTALL STREET NAME SIGN PER CITY OF RIVERSIDE STD DWG. NO. 662
12. CONST. 6" ROLLED CURB AND GUTTER PER DETAIL ON SHT. 1
13. CONST. TRANSITION FROM 6" CURB & GUTTER TO 6" ROLLED CURB & GUTTER PER DETAIL ON SHT. 1

BENCHMARK: E8-A
PK. NAIL AND TAG ON TOP OF 35'x 50'x 26' HIGH BOULDER, 100' W'LY OF TRAUTWEIN RD. AND 0.3' MI. N'LY OF WOOD RD.
FB 735/174.

Underground Service Alert
Call: TOLL FREE
1-800
422-4133
TWO WORKING DAYS BEFORE YOU DIG

PACIFIC BELL TELEPHONE CO.
REVIEWED BY — DATE 8-24-92

CENCOM CABLE
REVIEWED BY — DATE

SOUTHERN CALIFORNIA GAS COMPANY
REVIEWED BY — DATE 8-20-92

CITY OF RIVERSIDE - PUBLIC UTILITIES ELECTRIC
APPROVED BY — DATE 10/9/92

REGISTERED PROFESSIONAL ENGINEER
RICHARD A. SCIANNI
25917
EXPIRES 12/31/93
CIVIL
STATE OF CALIFORNIA

CSL ENGINEERING, INC.
2900 ADAMS STREET, SUITE A25
RIVERSIDE, CA. 92504 (714) 785-5122
PREPARED UNDER THE SUPERVISION OF:
RICHARD A. SCIANNI R.C.E. 25917 — DATE 5-12-92

MARK	REVISIONS	APPR.	DATE

DESIGNED BY V.M.S. DRAWN BY R.L.M. CHECKED BY J.J.L.

CITY OF RIVERSIDE
PUBLIC WORKS DEPARTMENT

APPROVED BY	DATE	BY
PRINCIPAL ENGINEER	12/15/92	SP
PARK DEPARTMENT	—	—
TRAFFIC DIVISION	12-11-92	JD
CHIEF P.W. ENGINEER	12/21/92	R.L.C.
	12/18/92	LCP

APPROVED BY — PUBLIC WORKS DIRECTOR — DATE 12/21/92

BROKEN BOW DRIVE

SCALE IN FEET 0 40' 80' 120' 160'
AS BUILT 7/18/95 RM

STREET IMPROVEMENT PLANS FOR
TRACT 27288
BROKEN BOW DRIVE (PRIVATE STREET)
HORIZ. SCALE: 1" = 40' VERT. SCALE: 1" = 4'

ACCOUNT NO. R-3301
SHEET 3 OF 5

INDEXED 1-14-93 GH

JN 307

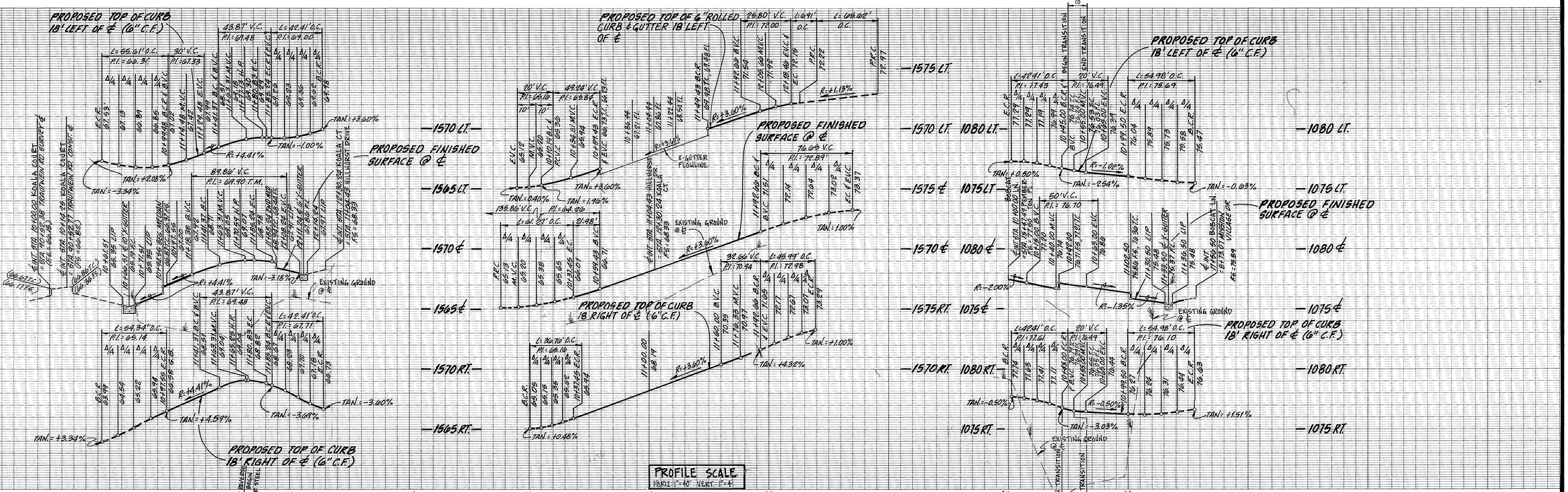

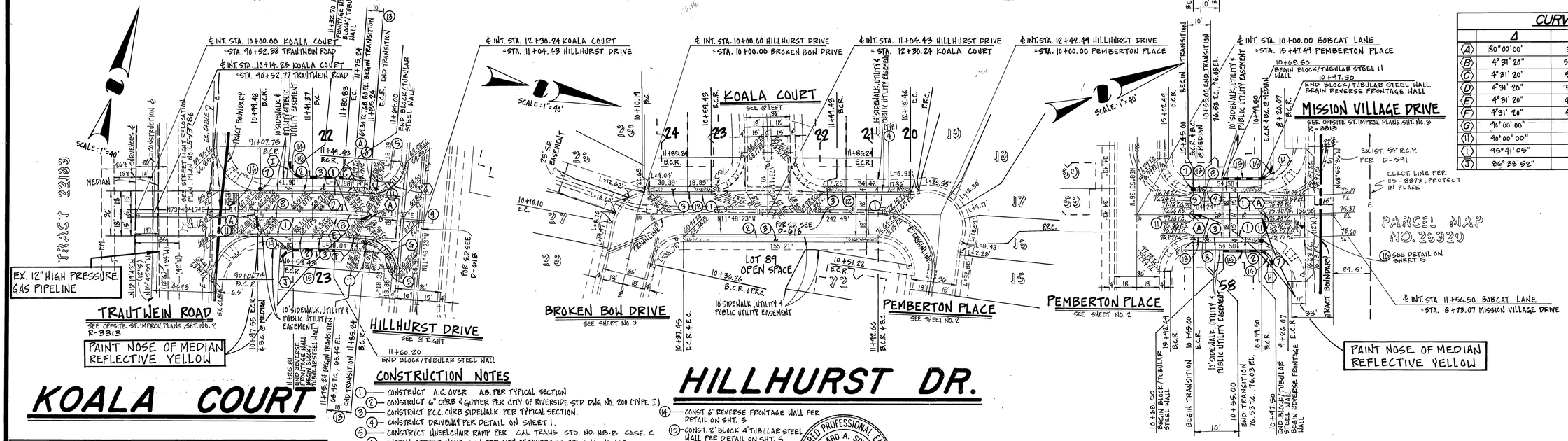

CURVE DATA

	Δ	R	L	T
A	180° 00' 00"	3.00'	9.42'	
B	4° 31' 28"	500.00'	39.46'	19.74'
C	4° 31' 20"	518.00'	40.88'	20.45'
D	4° 31' 20"	503.00'	39.70'	19.86'
E	4° 31' 20"	497.00'	39.23'	19.62'
F	4° 31' 28"	482.00'	38.04'	19.03'
G	90° 00' 00"	27.00'	42.41'	27.00'
H	90° 00' 00"	11.00'	17.28'	11.00'
I	95° 41' 05"	11.00'	18.37'	12.15'
J	86° 38' 52"	11.00'	16.64'	10.37'

CONSTRUCTION NOTES

1. CONSTRUCT A.C. OVER A.B. PER TYPICAL SECTION
2. CONSTRUCT 6" CURB & GUTTER PER CITY OF RIVERSIDE STD. DWG. NO. 200 (TYPE I).
3. CONSTRUCT P.C.C. CURB SIDEWALK PER TYPICAL SECTION.
4. CONSTRUCT DRIVEWAY PER DETAIL ON SHEET 1.
5. CONSTRUCT WHEELCHAIR RAMP PER CAL TRANS STD. NO. A8-B CASE C
6. INSTALL STREET NAME SIGN PER CITY OF RIVERSIDE STD. DWG. NO. 662
7. INSTALL STOP SIGN PER CITY OF RIVERSIDE STD. DWG. NO. 662
8. CONSTRUCT 6" CURB ONLY PER CITY OF RIVERSIDE STD. DWG. NO. 200 (TYPE II.)
9. CONSTRUCT CROSS GUTTER PER CITY OF RIVERSIDE STD. DWG. NO. 220 (WIDTH PER PLAN)
10. INSTALL R-7 ('KEEP RIGHT' SYMBOL) PER CAL TRANS TRAFFIC MANUAL
11. CONST. 6" ROLLED CURB AND GUTTER PER DETAIL ON SHT. 1
12. CONST. TRANSITION FROM 6" CURB AND GUTTER TO 6" ROLLED CURB AND GUTTER PER DETAIL ON SHT. 1
13. CONST. REVERSE FRONTAGE WALL PER DETAIL ON SHT. 5
14. CONST. 2' BLOCK 4' TUBULAR STEEL WALL PER DETAIL ON SHT. 5
15. CONST. DECORATIVE INTER-LOCKING PAVING PER DETAIL ON SHT. 5

BENCHMARK: EB-A
P.K. NAIL AND TAG ON TOP OF 35'x50'x20' HIGH BOULDER, 100' N'LY OF TRAUTWEIN RD. AND 0.3' MI. N'LY OF WOOD RD.
FB 735/74

Underground Service Alert
Call: TOLL FREE
1-800
422-4133
TWO WORKING DAYS BEFORE YOU DIG

REGISTERED PROFESSIONAL ENGINEER
RICHARD A. SCIANNI
25917
EXPIRES 12/31/93
CIVIL
STATE OF CALIFORNIA

SCALE IN FEET: 0, 40', 80', 120', 160'

AS BUILT THIS PLAN

PACIFIC BELL TELEPHONE CO.	SOUTHERN CALIFORNIA GAS COMPANY	
REVIEWED BY D. P. Hallan DATE 8-20-92	REVIEWED BY K. D. Sanchez DATE 8-20-92	
CENCOM CABLE	CITY OF RIVERSIDE - PUBLIC UTILITIES ELECTRIC	
REVIEWED BY [illegible] DATE 8/24/92	APPROVED BY William J. Morrison DATE 10/6/92	

CSL ENGINEERING, INC.
2900 ADAMS STREET, SUITE A25
RIVERSIDE, CA. 92504 (714) 785-5122
PREPARED UNDER THE SUPERVISION OF:
Richard A. Scianni 5-12-92
RICHARD A. SCIANNI R.C.E. 25917 DATE

MARK	REVISIONS	APPR.	DATE

DESIGNED BY V.M.S. DRAWN BY R.L.M. CHECKED BY J.J.L.

CITY OF RIVERSIDE
PUBLIC WORKS DEPARTMENT

	APPROVED BY	DATE	BY
	PRINCIPAL ENGINEER	12/16/92	
	PARK DEPARTMENT		
	TRAFFIC DIVISION	12-1-92	
	CHIEF P. W. ENGINEER	12-11-92	APPROVED
	P. ANNING	12-1-92	

APPROVED BY [signature] PUBLIC WORKS DIRECTOR
DATE 12/21/92

STREET IMPROVEMENT PLANS FOR
TRACT 27288
KOALA COURT, HILLHURST DRIVE, BOBCAT LANE (PRIVATE STREETS)

HORIZ. SCALE: 1" = 40' VERT. SCALE: 1" = 4'

ACCOUNT NO. R-3301

SHEET 4 OF 5

FILED 12/18/92

INDEXED 1-14-93

JN 307

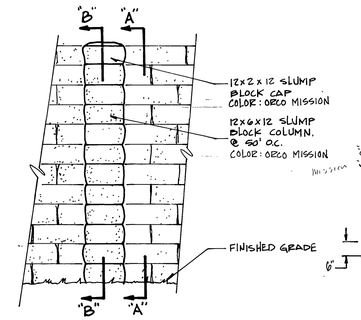

PER CITY STD 704

(14) REVERSE FRONTAGE WALL DETAIL

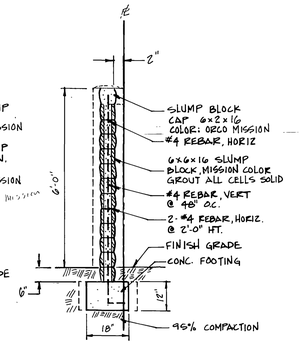

SECTION "A-A"

N.T.S.

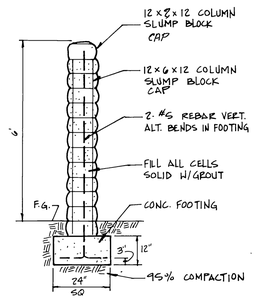

SECTION "B-B"

N.T.S.

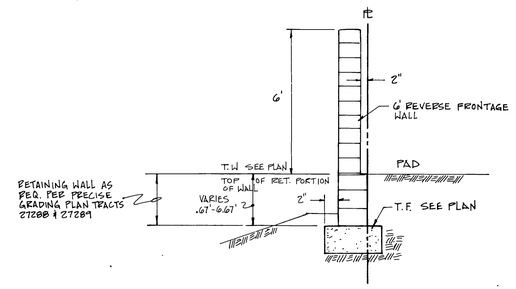

SECTION "C-C"

N.T.S.

FIVE KEY ELEMENTS MAKE UP PAVING

Five key elements make up paving.

1. Sub-grade - the natural earth material found on site.
2. Sub-base - a layer of gravel.
3. Sand bedding - a layer of graded sand. 1" MAX
4. Pavers - the surface wearing course. 80mm BLOCK (3⅛")
5. Edge restraint - the support used around the perimeter of the paving.

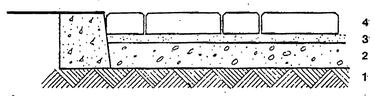

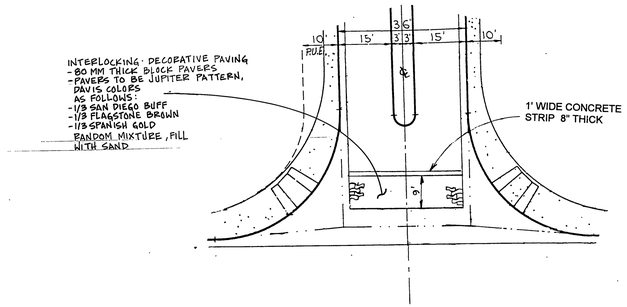

(16) ENTRY DECORATIVE PAVING DETAIL

N.T.S.

AREA OF DECORATIVE PAVING TO BE MAINTAINED BY HOME OWNERS ASSOCIATION

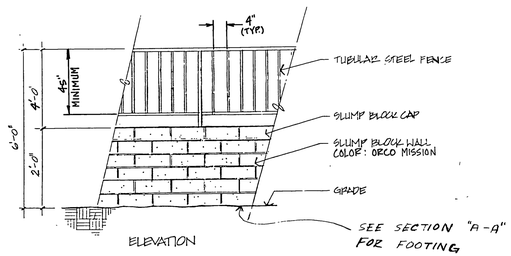

ELEVATION

(15) TUBULAR STEEL & SLUMP BLOCK WALL

NTS.

REGISTERED PROFESSIONAL ENGINEER
RICHARD A. SCIANNI
25917
EXPIRES 12/31/93
CIVIL
STATE OF CALIFORNIA

BENCHMARK: EB-A

PK NAIL AND TAG ON TOP OF 35'x50'x20' HIGH GRANITE BOULDER, 100' N'LY OF TRAUTWEIN RD. AND 0.3' MI. N'LY OF WOOD RD. FB735/74

ELEV: 1588.453

Underground Service Alert

Call: TOLL FREE
1-800
422-4133

TWO WORKING DAYS BEFORE YOU DIG

CSL ENGINEERING, INC.
2900 ADAMS STREET SUITE A25
RIVERSIDE, CA. 92504 (714)785-5122
PREPARED UNDER THE SUPERVISION OF:
Richard A. Scianni 11-30-92
RICHARD A. SCIANNI R.C.E. 25917 DATE

MARK	REVISIONS	APPR.	DATE

DESIGNED BY D.C. DRAWN BY R.M. CHECKED BY D.C.

CITY OF RIVERSIDE
PUBLIC WORKS DEPARTMENT

APPROVED BY	DATE	BY
PRINCIPAL ENGINEER	12-17-92	
PARK DEPARTMENT	—	—
TRAFFIC DIVISION	12-11-92	
CHIEF P. W. ENGINEER	12-21-92	
PLANNING	12-7-92	

APPROVED BY
PUBLIC WORKS DIRECTOR
DATE 12/21/92

STREET IMPROVEMENT PLANS FOR
TRACT 27288
DETAIL SHEET
PRIVATE STREETS

HORIZ. SCALE: 1" = AS SHOWN VERT. SCALE: 1" =

AS BUILT 7/18/95 RVM

ACCOUNT NO. R-3301

SHEET 5 OF 5

INDEXED 1-19-93 GH

JN 307