RIVERSIDE MIDDLE SCHOOL NO. 6

STREET IMPROVEMENT PLANS

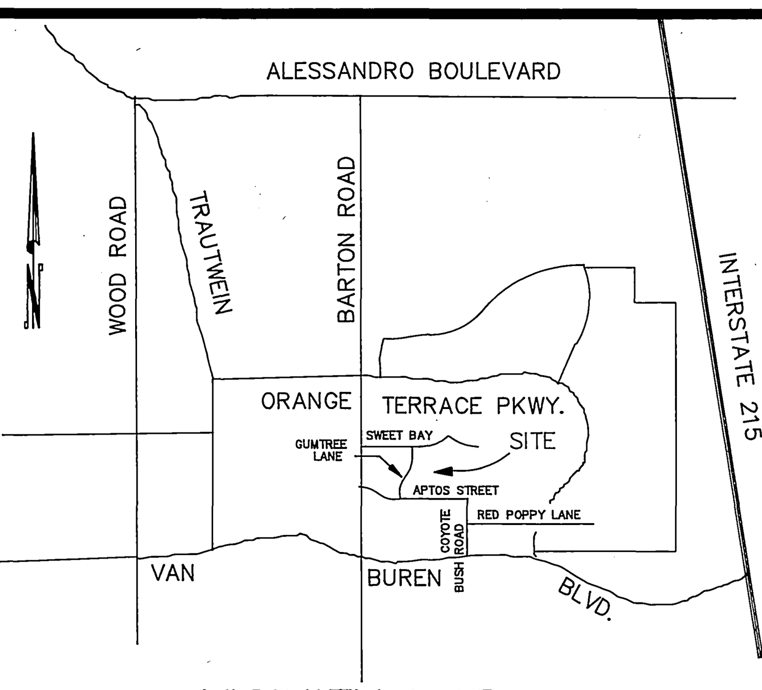

VICINITY MAP

N.T.S.
THOMAS GUIDE PAGE 24 GRID C5

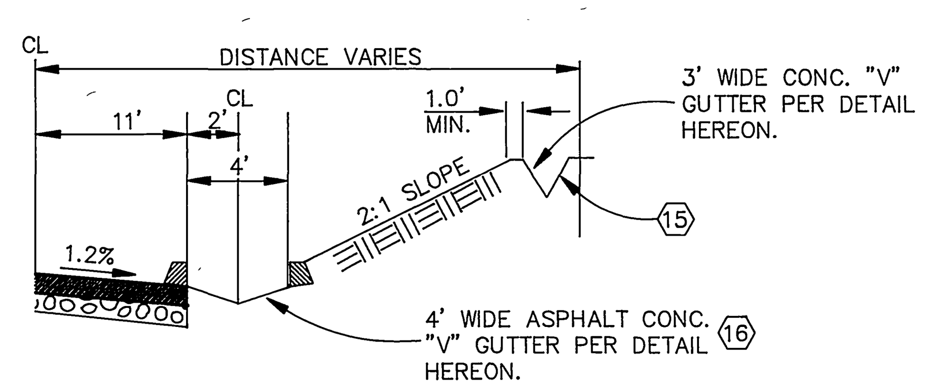

SECTION "A"-"A" (see sht. 2 & 3)

NOT TO SCALE

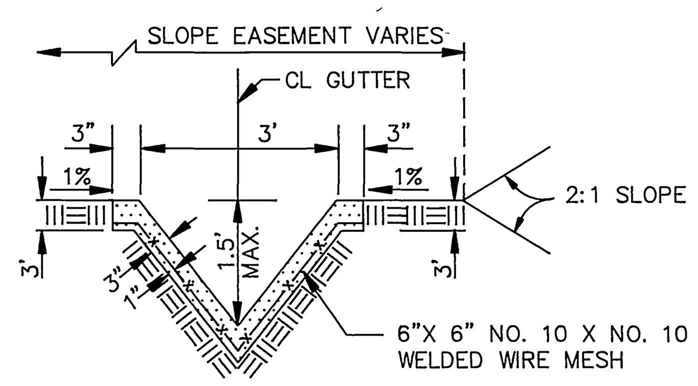

CONCRETE "V" GUTTER (15)

NOT TO SCALE

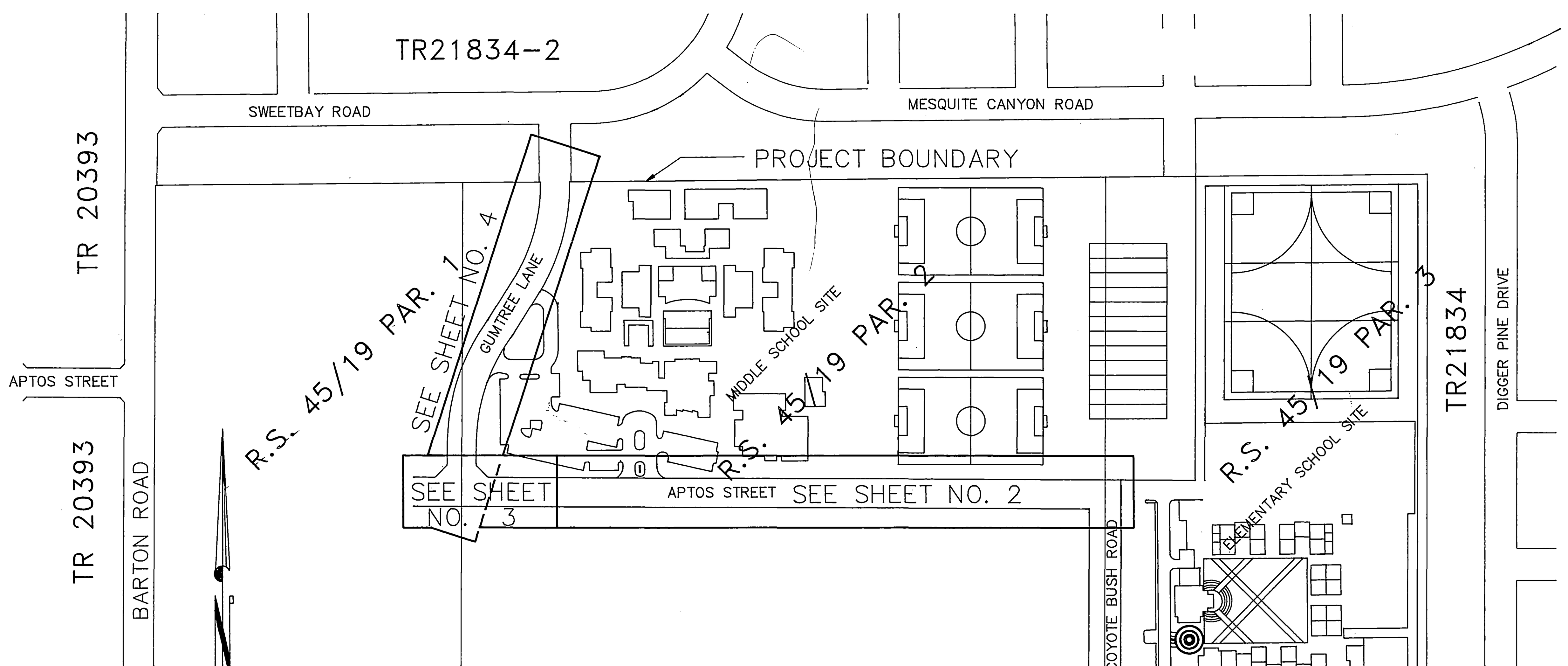

INDEX MAP

SCALE 1" = 200'

EARTHWORK QUANTITIES:

RAW EXCAVATION	23,250 CY
RAW EMBANKMENT	3,495 CY

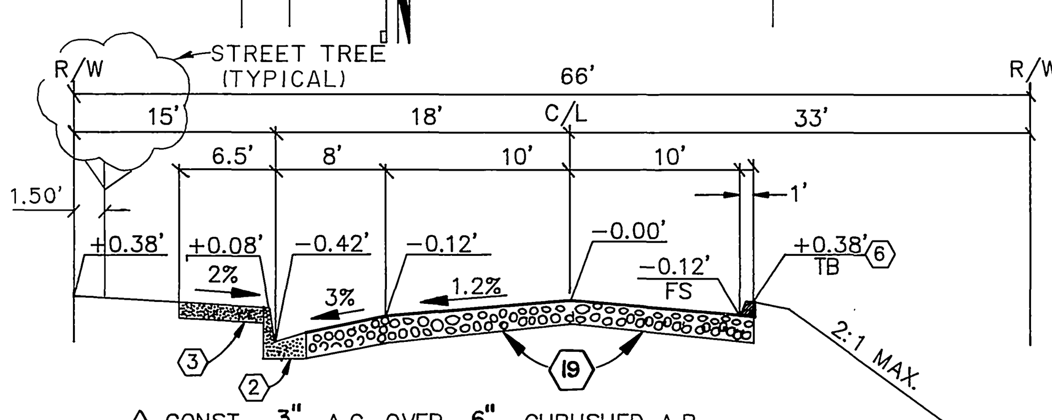

CONST. 3" A.C. OVER 6" CHRUSHED A.B.

GUMTREE LANE

STA. 1+37.00 TO STA. 8+52.31

TYPICAL SECTION T.I.= 6.0

NOT TO SCALE

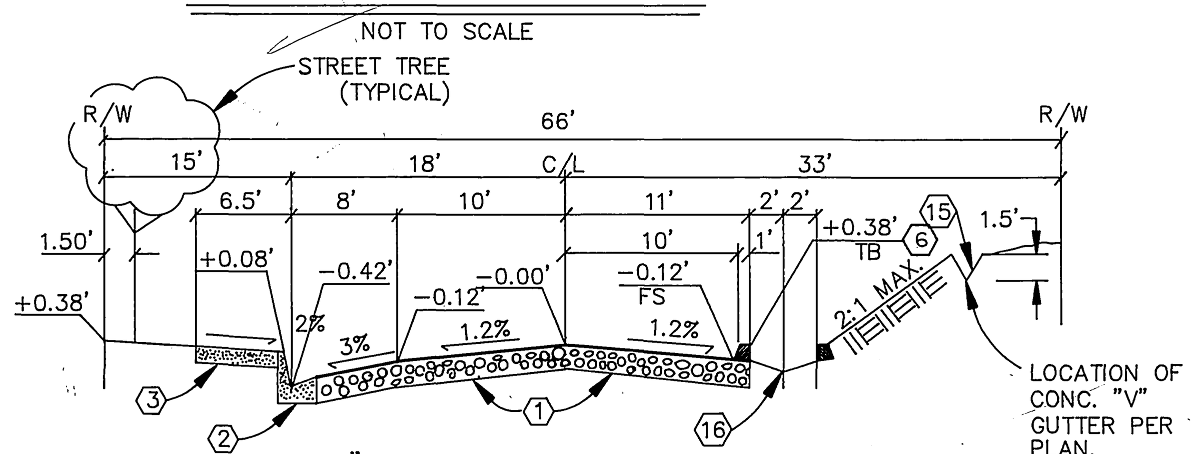

CONST. 3" A.C. OVER COMPACTED SUBGRADE

APTOS STREET

STA. 10+00.00 TO STA. 16+95.00
STA. 19+80.00 TO STA. 23+01.11

TYPICAL SECTION T.I.= 6.0

NOT TO SCALE

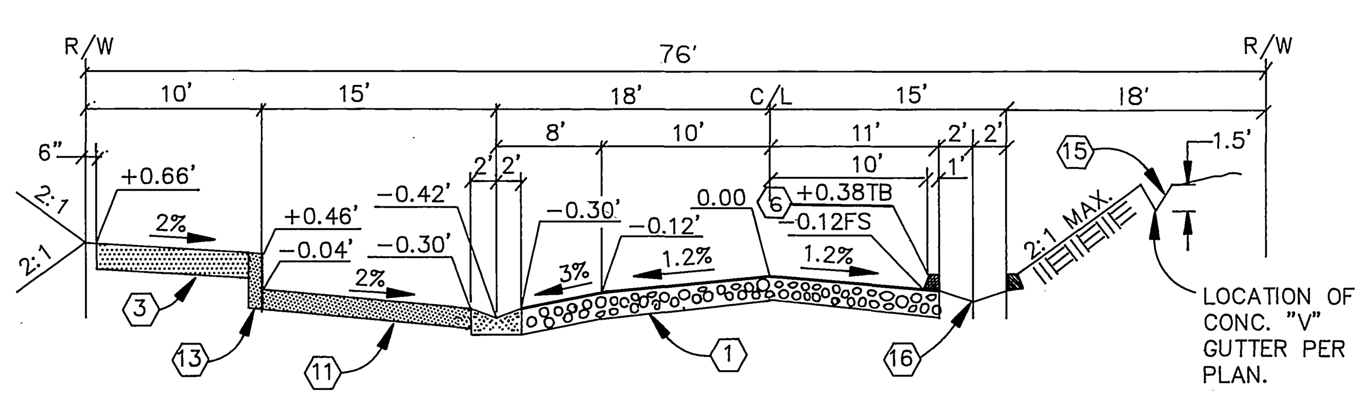

CONST. 3" A.C. OVER COMPACTED SUBGRADE

APTOS STREET

STA. 17+50.00 TO STA. 19+25.00

TYPICAL SECTION T.I.= 6.0

NOT TO SCALE

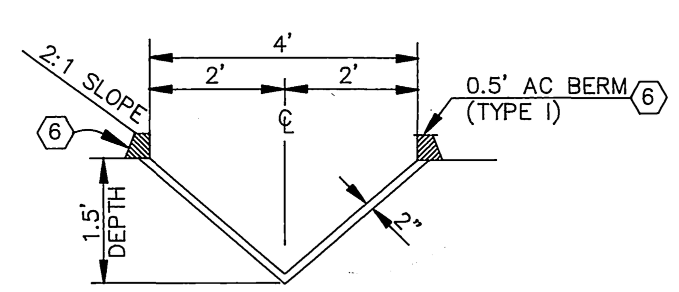

ASPHALT CONCRETE "V" GUTTER (16)

NOT TO SCALE

GENERAL NOTES

1. It shall be the responsibility of the contractor to clear the right of way in accordance with the provisions of law as it affects each utility including irrigation lines and appurtenances and at no cost to the City
2. Construction shall be in accordance with the City of Riverside Dept. of Public Works, Standard Drawings, Std. Dwg. No. 10, and the Standard Specifications for Public Works Construction, Current Edition.
3. Trim edge of existing pavement where new pavement joins to a smooth, straight line. Construct match-up paving as shown on plan and overlay paving as directed in the field to produce a smooth section.
4. The subdivider shall arrange for a soil test to be made by a soils engineer after the streets have been prepared to rough grade. Depth of base material and A.C. paving shall be determined by the City of Riverside design standards and test procedures.
5. All flagged elevations shall be staked in the field by the private engineer.
6. The private engineer signing these plans is responsible for assuring the accuracy and acceptability of the work hereon. In the event of discrepancies arising during construction, the private engineer shall be responsible for determining an acceptable solution and revising the plans for approval by the City.
7. On all areas within public right of way where the fill is one (1) foot or greater, a letter will be required from the soils engineeer, certifying the compaction of the fill below subgrade, prior to issuance of the Construction Permit/Cut Sheets.
8. All traffic signs shall be installed prior to opening the streets to traffic.
9. See "Street Lighting Plans" for quantity and location of required street lights.
10. The developer and/or contractor shall contact the Public Service Department (351-6127) to pick up any existing Std. 180 barricades that are being removed. The City's inspector will make the final determination on whether a barricade can be relocated.
11. Notice to contractor. The existence and location of any underground utility pipes or structures shown on these plans were obtained by a search of the available records. To the best of our knowledge there are no existing utilities except as shown on these plans. The contractor is required to take precautionary measures to protect the utility lines shown and any other lines not of record or not shown on these plans.
12. Contractor agrees that he shall assume sole and complete responsibility for job site conditions during the course of construction of this project, including safety of all persons and property; that this requirement shall apply continuously and not be limited to normal working hours; and that the contractor shall defend, indemnify and hold the owner and the engineer harmless from any and all liability, real or alleged, in connection with the performance of work on this project, excepting for liability arising from the sole negligence of the owner engineer.
13. Any traffic control striping obliterated and/or badly worn during construction shall be restored by the contractor within five days after notification from the City Inspectors.
14. Final striping for traffic control and/or pavement marking to be the responsibility of the developer.
15. The contractor shall call in a location request to Underground Service Alert (USA), Phone No. 1-800-422-4133, two working days before digging No construction permit will be issued by the Public Works Department involving excavation for underground facilities unless the applicant has been provided an inquiry identification number by U.S.A.
16. Quantities shown are for information only and the City of Riverside is not responsible for their accuracy.
17. The developer shall be responsible for preserving or re-establishing a referencing survey monuments destroyed, disturbed or buried as a result of construction shown hereon.
18. The developer shall give WMWD five (5) working days written notice prior to the start of construction and to allow WMWD ten (10) working days from completion of work. Phone : 780-4170
19. The contractor shall coordinate trenching for cable television with other trenching within the subdivision.

QUANTITY DISCLAIMER

QUANTITIES SHOWN HEREON ARE PROVIDED FOR BONDING PURPOSES ONLY. THE CONTRACTOR SHALL BE RESPONSIBLE FOR VARIFYING ALL QUANTITIES PRIOR TO CONSTRUCTION.

REVIEWED BY:
WESTERN MUNICIPAL WATER DISTRICT
for Non-Interference compliance
SHEET 1 THROUGH 5
Stev W. Appel
ASSOCIATE ENGINEER RCE 48109
DATE 6/8/94

CONSTRUCTION NOTES — ESTIMATE

(16) CONSTRUCT 4' WIDE A.C. "V" GUTTER PER DETAIL ON SHEET NO. 1. — 1,300 LF

(17) CONSTRUCT RIP RAP AREA, 10'X 10', 1/4 TON ROCK, 3' THICK. — 22 CY

(18) CONSTRUCT DRIVE APPROACH PER CITY OF RIVERSIDE STD. DWG. NO. 302 TYPE V, A=24', B=38'. — 406 SF

NOTE: SEE SHEET NO. 5 FOR ADDITIONAL STRIPING/SIGNING CONSTRUCTION NOTES

PARKS AND RECREATION NOTES

1. All related work shall conform to the City of Riverside, Park and Recreation Department Standards and City of Riverside Street Tree policies.
2. Both a street tree Relocation/Removal permit as issued by the Park and Recreation Department and a Street Opening permit as issued by the Public Works Department are required prior to commencement of tree relocation and/or removal work. For all existing trees within what will ultimately be the Public Right-of-Way pavement area, backfill of all holes must be inspected by the Public Works Inspector for proper compaction.
3. ALL STREET TREES SHALL BE PLANTED PRIOR TO OCCUPANCY.
4. When calling for inspections contact the Street Tree Inspector a minimum of 48 hours in advance at (909) 351-6126 to schedule an inspection. A Field Notice will be issued as written approval for each stage of inspection. A verbal approval will not be acceptable. Inspections are required:
   a. After completion of final grading of the lots and when all utility services and sewer laterals have been marked, but prior to digging plant pits, all final street tree locations are to be spotted in the field by the street tree inspector.
   b. While digging plant pits and planting/relocating trees;
   c. After planting and all other indicated or specified work has been completed, for start of maintenance;
   d. At end of the maintenance period, the contractor/developer shall call the Street Tree Inspector at (909) 351-6126 for a final accept ance inspection in order to be released from maintenance. Develop ers bonds will not be released until after receipt of written notification from the City that the trees pass final inspection an the Park and Recreation department is assuming maintenance respon-sibilities.
5. The developer shall be responsible to acceptably maintain all planting for a minimum period of one (1) year.
6. All Street Trees must be automatically irrigated, except where adjacent to single family or duplex residential uses.

*NOTE: In the interest of public safety and maintenance the Street Tree Inspector shall have the authority to revise the street tree quantities and locations shown on approved plans based upon field conditions found at the time of installation of the trees.

7. Street tree planting shall be as follows:

Street Name	Botanical Name / Common Name	Size	Spacing Req.	Qty.
GUMTREE	PINUS CANARIENSIS CANARY ISLAND PINE	15 GAL.	45'	9
APTOS	ROBINIA PSEUDOACACIA 'PURPLE ROBE'	15 GAL.	45'	23*
	PURPLE ROBE LOCUST			
NOTE:	CONTRACTOR IS TO TURN OVER TO CITY 6 ADDITIONAL 15 GAL. STREET			
	TREES + STAKES AND TREE TIES. CONTACT STREET TREE INSPECTOR AT 351-6126 FOR SPECIES.			

*ONLY 17 WILL BE INSTALLED

CONSTRUCTION NOTES — ESTIMATE

△1 (1) CONSTRUCT 3" A.C. OVER **COMPACTED SUBGRADE** PER S.R. 1490 R-VALUE= 74 — **35,775 SF**

(2) CONSTRUCT CONCRETE CURB AND GUTTER (TYPE I 6" C.F.) PER CITY OF RIVERSIDE STD. DWG. NO. 200. — 1625 LF

(3) CONSTRUCT CONCRETE SIDEWALK PER CITY OF RIVERSIDE STD. DWG. NO. 325 — 12,100 SF

(4) CONSTRUCT HANDICAP RAMP PER CITY OF RIVERSIDE STD. DWG. NO. 304 — 9 EA.

(5) CONSTRUCT CATCH BASIN PER CITY OF RIVERSIDE STD. DWG. NO. 405 (W=14', V=7.51') — 1 EA.

(6) CONSTRUCT ASPHALT CONCRETE BERM (TYPE I) PER CITY OF RIVERSIDE STD. DWG. NO. 250. — 3,291 LF

(7) REMOVE AND RELOCATE STREET BARRICADE PER CITY OF RIVERSIDE STD. DWG. NO. 180 (WITH W-57 SIGNS PER PLAN). — 80 LF

(8) INSTALL STREET NAME SIGN PER CITY OF RIVERSIDE STD. DWG. NO. 662A (SEE SCHEDULE, SHEET 3). — 1 EA.

(9) CONSTRUCT DRIVE APPROACH PER CITY OF RIVERSIDE STD. DWG. NO. 302 TYPE V, A=30', B=44'. — 1,984 SF

(10) CONSTRUCT UNDER SIDEWALK DRAIN PER CITY OF RIVERSIDE STD. DWG. NO. 411 (MODIFIED, W=2'). — 15 LF

(11) CONSTRUCT 6" P.C.C. OVER 6" CRUSHED A.B. — 4,140 SF

(12) CONSTRUCT 6' WIDE CONCRETE CROSS GUTTER AND SPANDRELS PER CITY OF RIVERSIDE STD. DWG. NO. 220. — 1,565 SF

(13) CONSTRUCT CONCRETE CURB ONLY (MODIFIED TYPE II 6" C.F.) PER CITY OF RIVERSIDE STD. DWG. NO. 200. — 293 LF

(14) CONSTRUCT 36" Ø C.S.P. INLET PER CITY OF RIVERSIDE STD. DWG. NO. 412. — 1 EA.

(15) CONSTRUCT 3' WIDE CONCRETE "V" GUTTER PER DETAIL ON SHEET NO. 1. — 1300 LF

(19) **CONSTRUCT 3" A.C. OVER 6" CRUSHED A.B. PER S.R. 1490 R-VALUE=43** — **20,335 SF** △1

Underground Service Alert
Call: TOLL FREE
1-800
422-4133
TWO WORKING DAYS BEFORE YOU DIG

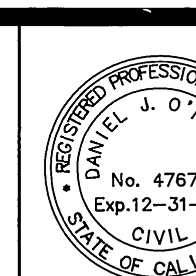

PREPARED UNDER THE DIRECTION OF:
Daniel J. O'Rourke
DANIEL J. O'ROURKE
REGISTERED CIVIL ENGINEER NO. 47677
EXPIRATION DATE: 12-31-95 DATE: 3-8-94

J.F. Davidson Associates, Inc.
ENGINEERING PLANNING SURVEYING ARCHITECTURE LANDSCAPE ARCHITECTURE
RIV. BUS. TAX NUMBER 4994 EXP. 12/31/94
3880 Lemon Street Suite 300 P.O. Box 493 Riverside, CA 92502 (909) 686-0844 FAX 909-686-5954
3550 Shelby Street Suite 100 Ontario CA, 91764 (909) 944-2881 FAX 714 944-7761
77-564 Country Club Dr. Suite 400-B Palm Desert, CA 92211 P.O. Box 12817 Palm Desert, CA 92255 (619) 360-3780 FAX 619-360-3789
27349 Jefferson Suite 115 P.O. Box 340 Temecula, CA 92390 (909) 676-7710 FAX 909-699-1981

SCALE AS NOTED
DATE NOVEMBER 1992

BENCHMARK: V.B. 10-64 ELEV: 1700.670
BRASS DISK FLUSH & MARKED V.B. 10-64, 0.6 MI E ON VAN BUREN BLVD FROM E INT VAN BUREN & WOOD RD 205' N OF VAN BUREN AT N.E. SIDE OF GRANITE BOULDERS ON TOP OF 3'X15'X18' BOULDER.

MARK	REVISIONS		APPR.	DATE
△1	PAVEMENT SECTION REVISIONS	FRED	ML	12/7/94

DESIGNED BY D.J.O. DRAWN BY S.L.C. CHECKED BY G.P.

FRED

CITY OF RIVERSIDE
PUBLIC WORKS DEPARTMENT

APPROVED BY	DATE	BY
PRINCIPAL ENGINEER	6/29/94	SC
PARK DEPARTMENT	5.12.94	LH
TRAFFIC DIVISION	6/22/94	ZD
CHIEF P.W. ENGINEER	7/11/94	RW.G
	7/8/94	VLL

APPROVED BY [signature]
PUBLIC WORKS DIRECTOR
DATE 7/12/94

CITY OF RIVERSIDE
RIVERSIDE MIDDLE SCHOOL NO. 6
TITLE SHEET
STREET IMPROVEMENT PLANS
FOR R.U.S.D. (N.T.D.)
W.O. 9212848

SHEET NO. 1
C-9
OF 5 SHTS
FILE NO. R-3341

INDEXED 7-29-94 GH

PC 3698-S

STA 12+00.00 MATCHLINE SEE SHEET 3

PROPOSED T.C. @ 18' LT OF C/L (6" C.F.)

EX. GRND. @ 33' LEFT

PROP. TC @ 40' LT OF CL (6" CF)

EXISTING GROUND @ 33' LT OF C/L

TRUE LENGTH ON CURB 21.68', 21.68'

PROP. GUTTER FLOWLINE

PROP. F.S. @ C/L

EX. GRND. @ ℄

EXISTING GROUND @ ℄

EX. GRND. @ 33' RT.

EXISTING GROUND @ 33' RT OF CL

FUTURE T.C. @ 18' RT OF C/L (6" CF)

PROPOSED T.B. = CL +0.38'

1750 LT

1750 CL

1750 RT

C/L INT STA 23+46.62 APTOS STREET = C/L STA 16+71.94 COYOTE BUSH ROAD (1744.41')

PROFILE SCALE
HORIZ. 1"=40'
VERT. 1"=4'

STA 12+00.00 MATCHLINE SEE SHEET 3

PLANTER AREA

STA 13+55.07 C/L DRIVEWAY

STA 12+93.07 ECR 1774.15 TC 1773.65 FL

BCR 1774.77 TC 1774.27 FL

ECR 1774.95 TC 1774.45 FL

STA 13+70 HP FS 74.38

74.05FS 74.28FS 74.26FS

STA 14+17.07 BCR 1774.52 TC, 1774.02 FL

STA 14+46.00 INSTALL ST. LIGHT

STA 15+34.77 C/L 30' D/W

STA 16+26.00 INSTALL ST. LIGHT

STA 16+95.00 BC BEGIN BUS TURN OUT TRANS.

STA 17+34.69 EC BEGIN BUS TURN OUT

STA 17+66.00 C/L 30' D/W

STA 18+06.00 INSTALL ST. LIGHT

STA 19+40.31 BC END BUS TURN OUT

STA 19+60.00 EC END BUS TURN OUT TRANS.

STA 19+86.00 INSTALL ST. LIGHT

STA 21+66.00 INSTALL ST. LIGHT

STA 22+00.00 C/L 30' D/W

STA 22+53.00 C.I. CATCH BASIN (W=14', V=7.51') CONNECT TO EXIST 18" STORM DRAIN STUB-OUT AT STA. 22+58.00, 18' LT., PER D-624.

STA 22+87.83 C/L 30' D/W

STA 23+01.11 REMOVE EXIST. BARRICADE & REINSTALL AT STA 10+02.80 APTOS STREET

STA 23+10.00 (1746.25 TC, 1745.75 FL) END IMPROVEMENTS / MATCH EXISTING

STA 23+46.62 APTOS STREET =16+71.94 COYOTE BUSH CL INTERSECTION

STA 23+65.82 (1744.31 TC/1743.81 FL)

PROPOSED STORM DRAIN PER D-624

PROPOSED SEWER PER S-1654

PROPOSED STREET IMPROVEMENT PER R-3340.

APTOS STREET

COYOTE BUSH ROAD

SLOPE EASEMENT

XMAS TREES

GRAPHIC SCALE

(IN FEET)
1 inch = 40 ft.

CONSTRUCTION NOTES

1. CONSTRUCT 3" A.C. OVER COMPACTED SUBGRADE PER S.R. 1490 R-VALUE= 74
2. CONSTRUCT CONCRETE CURB AND GUTTER (TYPE I 6" C.F.) PER CITY OF RIVERSIDE STD. DWG. NO. 200.
3. CONSTRUCT CONCRETE SIDEWALK PER CITY OF RIVERSIDE STD. DWG. NO. 325
4. CONSTRUCT HANDICAP RAMP PER CITY OF RIVERSIDE STD. DWG. NO. 304
5. CONSTRUCT CATCH BASIN PER CITY OF RIVERSIDE STD. DWG. NO. 405 (W=14', V=7.51')
6. CONSTRUCT ASPHALT CONCRETE BERM (TYPE I) PER CITY OF RIVERSIDE STD. DWG. NO. 250.
7. REMOVE AND RELOCATE STREET BARRICADE PER CITY OF RIVERSIDE STD. DWG. NO. 180 (WITH W-57 SIGNS PER PLAN).
9. CONSTRUCT DRIVE APPROACH PER CITY OF RIVERSIDE STD. DWG. NO. 302 TYPE V, A=30', B=44'.
11. CONSTRUCT 6" P.C.C. OVER 6" CRUSHED A.B.
13. CONSTRUCT CONCRETE CURB ONLY (MODIFIED TYPE II 6" C.F.) PER CITY OF RIVERSIDE STD. DWG. NO. 200.
14. CONSTRUCT 36" Ø C.S.P. INLET PER CITY OF RIVERSIDE STD. DWG. NO. 412.
15. CONSTRUCT 3' WIDE ASPHALT CONCRETE "V" GUTTER PER DETAIL ON SHEET NO. 1.
16. CONSTRUCT 4' WIDE ASPHALT CONCRETE "V" GUTTER PER DETAIL ON SHEET NO. 1.

CURVE TABLE				
CURVE	DELTA	RADIUS	LENGTH	TANGENT
(1)	41°24'35"	30.00'	21.68'	11.34'
(2)	90°00'00"	27.00'	42.41'	27.00'

Underground Service Alert
Call: TOLL FREE
1-800 422-4133
TWO WORKING DAYS BEFORE YOU DIG

PRIVATE ENGINEERING NOTE

CONSTRUCTION CONTRACTOR AGREES THAT IN ACCORDANCE WITH GENERALLY ACCEPTED CONSTRUCTION PRACTICES, CONSTRUCTION CONTRACTOR WILL BE REQUIRED TO ASSUME SOLE AND COMPLETE RESPONSIBILITY FOR JOB SITE CONDITIONS DURING THE COURSE OF CONSTRUCTION OF THE PROJECT, INCLUDING SAFETY OF ALL PERSONS AND PROPERTY; THAT THIS REQUIREMENT SHALL BE MADE TO APPLY CONTINUOUSLY AND NOT BE LIMITED TO NORMAL WORKING HOURS, AND CONSTRUCTION CONTRACTOR FURTHER AGREES TO DEFEND, INDEMNIFY AND HOLD DESIGN PROFESSIONAL HARMLESS FROM ANY AND ALL LIABILITY, REAL OR ALLEGED, IN CONNECTION WITH THE PERFORMANCE OF WORK ON THIS PROJECT, EXCEPTING LIABILITY ARISING FROM THE SOLE NEGLIGENCE OF DESIGN PROFESSIONAL.

REGISTERED PROFESSIONAL ENGINEER DANIEL J. O'ROURKE No. 47677 Exp.12-31-95 CIVIL STATE OF CALIFORNIA

PREPARED UNDER THE DIRECTION OF:
DANIEL J. O'ROURKE
REGISTERED CIVIL ENGINEER NO. 47677
EXPIRATION DATE: 12-31-95 DATE: 3-8-94

J.P. Davidson Associates, Inc.
ENGINEERING PLANNING SURVEYING ARCHITECTURE LANDSCAPE ARCHITECTURE
RIV. BUS. TAX NUMBER 4994 EXP. 12/31/94
3880 Lemon Street Suite 300 P.O. Box 493 Riverside, CA 92502 (909) 686-0844 FAX 909-686-5854
3550 Shalby Street Suite 100 Ontario CA, 91764 (909) 944-2881 FAX 714 944-7761
77-564 Country Club Dr. Suite 400-B Palm Desert, CA 92211 P.O. Box 12817 Palm Desert, CA 92255 (619) 360-3780 FAX 619-360-3789
27349 Jefferson Suite 115 P.O. Box 340 Temecula, CA 92390 (909) 676-7710 FAX 909-699-1981

SCALE 1"= 40'
DATE NOVEMBER 1992

BENCHMARK: V.B. 10-64 ELEV: 1700.670
BRASS DISK FLUSH & MARKED V.B. 10-64, 0.6 MI E ON VAN BUREN BLVD FROM E INT VAN BUREN & WOOD RD 205' N OF VAN BUREN AT N.E. SIDE OF GRANITE BOULDERS ON TOP OF 3'X15'X18' BOULDER.

MARK	REVISIONS	APPR.	DATE
1	PAVEMENT SECTION REVISIONS		7/7/94

DESIGNED BY D.J.O. DRAWN BY S.L.C. CHECKED BY G.P.

FIXED

CITY OF RIVERSIDE
PUBLIC WORKS DEPARTMENT

APPROVED BY	DATE	BY
PRINCIPAL ENGINEER	6/23/94	
PARK DEPARTMENT	5-12-94	
TRAFFIC DIVISION	6/23/94	
CHIEF P.W. ENGINEER	7/11/94	
	7/8/94	

APPROVED BY
PUBLIC WORKS DIRECTOR
DATE 7/12/94

CITY OF RIVERSIDE
RIVERSIDE MIDDLE SCHOOL NO. 6
APTOS STREET
STA 12+00.00 TO STA 23+01.11
STREET IMPROVEMENT PLANS
FOR R.U.S.D. (N.T.D.)
W.O. 9212848

SHEET NO. 2
C-10
OF 5 SHTS
FILE NO. R-3341

INDEXED 7-29-94 GH

PC 3698-S

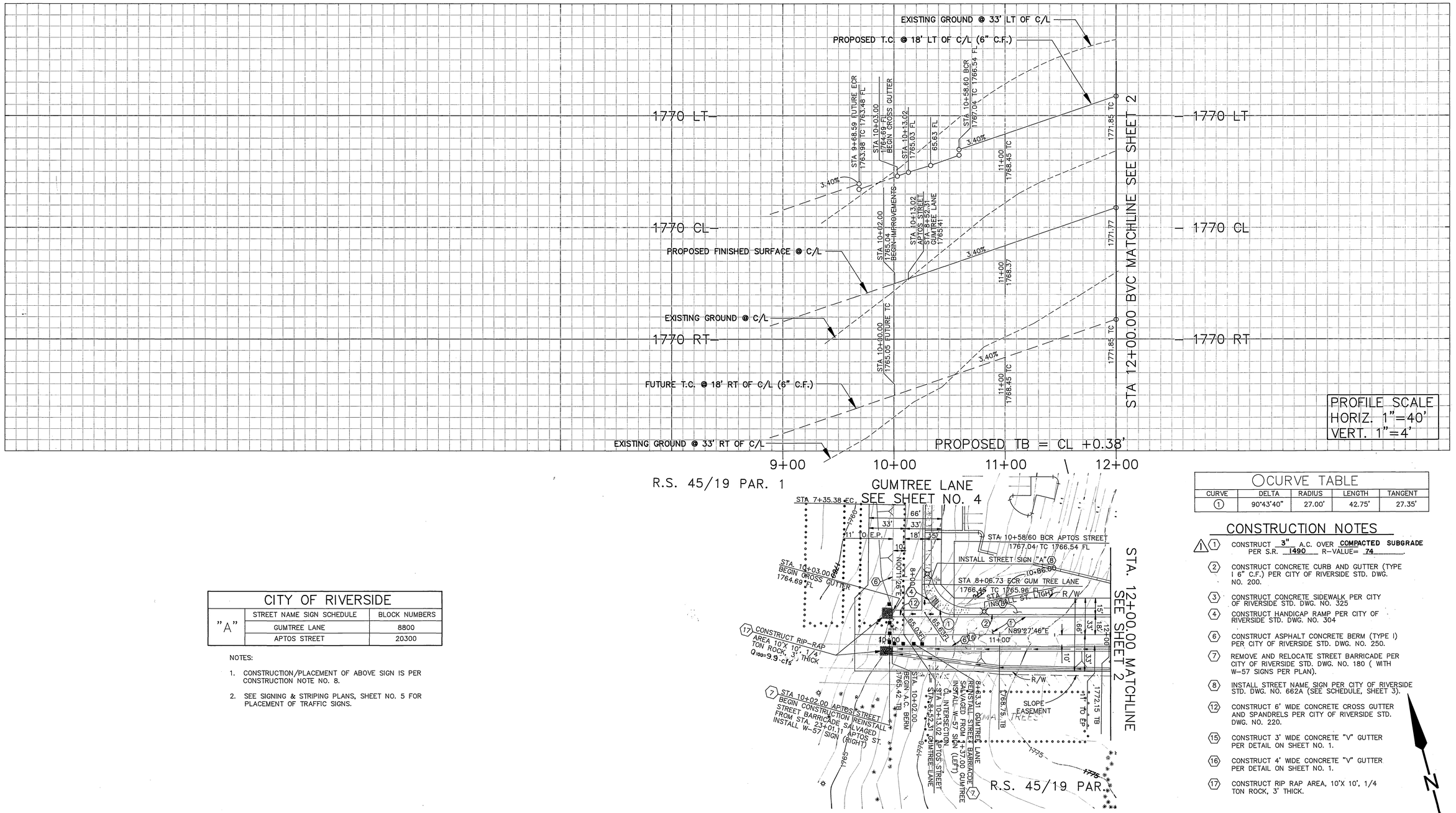

PROFILE SCALE
HORIZ. 1"=40'
VERT. 1"=4'

R.S. 45/19 PAR. 1

GUMTREE LANE
SEE SHEET NO. 4

○CURVE TABLE

CURVE	DELTA	RADIUS	LENGTH	TANGENT
①	90°43'40"	27.00'	42.75'	27.35'

CONSTRUCTION NOTES

1. CONSTRUCT 3" A.C. OVER COMPACTED SUBGRADE PER S.R. 1490 R-VALUE= 74
2. CONSTRUCT CONCRETE CURB AND GUTTER (TYPE I 6" C.F.) PER CITY OF RIVERSIDE STD. DWG. NO. 200.
3. CONSTRUCT CONCRETE SIDEWALK PER CITY OF RIVERSIDE STD. DWG. NO. 325
4. CONSTRUCT HANDICAP RAMP PER CITY OF RIVERSIDE STD. DWG. NO. 304
6. CONSTRUCT ASPHALT CONCRETE BERM (TYPE I) PER CITY OF RIVERSIDE STD. DWG. NO. 250.
7. REMOVE AND RELOCATE STREET BARRICADE PER CITY OF RIVERSIDE STD. DWG. NO. 180 (WITH W-57 SIGNS PER PLAN).
8. INSTALL STREET NAME SIGN PER CITY OF RIVERSIDE STD. DWG. NO. 662A (SEE SCHEDULE, SHEET 3).
12. CONSTRUCT 6' WIDE CONCRETE CROSS GUTTER AND SPANDRELS PER CITY OF RIVERSIDE STD. DWG. NO. 220.
15. CONSTRUCT 3' WIDE CONCRETE "V" GUTTER PER DETAIL ON SHEET NO. 1.
16. CONSTRUCT 4' WIDE CONCRETE "V" GUTTER PER DETAIL ON SHEET NO. 1.
17. CONSTRUCT RIP RAP AREA, 10'X 10', 1/4 TON ROCK, 3' THICK.

GRAPHIC SCALE

40 0 20 40 80 160

(IN FEET)
1 inch = 40 ft.

N

CITY OF RIVERSIDE		
"A"	STREET NAME SIGN SCHEDULE	BLOCK NUMBERS
	GUMTREE LANE	8800
	APTOS STREET	20300

NOTES:

1. CONSTRUCTION/PLACEMENT OF ABOVE SIGN IS PER CONSTRUCTION NOTE NO. 8.
2. SEE SIGNING & STRIPING PLANS, SHEET NO. 5 FOR PLACEMENT OF TRAFFIC SIGNS.

APTOS STREET

Underground Service Alert
Call: TOLL FREE
1-800
422-4133
TWO WORKING DAYS BEFORE YOU DIG

PRIVATE ENGINEERING NOTE

CONSTRUCTION CONTRACTOR AGREES THAT IN ACCORDANCE WITH GENERALLY ACCEPTED CONSTRUCTION PRACTICES, CONSTRUCTION CONTRACTOR WILL BE REQUIRED TO ASSUME SOLE AND COMPLETE RESPONSIBILITY FOR JOB SITE CONDITIONS DURING THE COURSE OF CONSTRUCTION OF THE PROJECT, INCLUDING SAFETY OF ALL PERSONS AND PROPERTY; THAT THIS REQUIREMENT SHALL BE MADE TO APPLY CONTINUOUSLY AND NOT BE LIMITED TO NORMAL WORKING HOURS, AND CONSTRUCTION CONTRACTOR FURTHER AGREES TO DEFEND, INDEMNIFY AND HOLD DESIGN PROFESSIONAL HARMLESS FROM ANY AND ALL LIABILITY, REAL OR ALLEGED, IN CONNECTION WITH THE PERFORMANCE OF WORK ON THIS PROJECT, EXCEPTING LIABILITY ARISING FROM THE SOLE NEGLIGENCE OF DESIGN PROFESSIONAL.

REGISTERED PROFESSIONAL ENGINEER
DANIEL J. O'ROURKE
No. 47677
Exp.12-31-95
CIVIL
STATE OF CALIFORNIA

PREPARED UNDER THE DIRECTION OF:
Daniel J. O'Rourke
DANIEL J. O'ROURKE
REGISTERED CIVIL ENGINEER NO. 47677
EXPIRATION DATE: 12-31-95 DATE: 3-8-94

J.F. Davidson Associates, Inc.
ENGINEERING PLANNING SURVEYING ARCHITECTURE LANDSCAPE ARCHITECTURE

RIV. BUS. TAX NUMBER 4994 EXP. 12/31/94

3880 Lemon Street Suite 300 P.O. Box 493 Riverside, CA 92502 (909) 686-0844 FAX 909-686-5954
3550 Shelby Street Suite 100 Ontario CA, 91764 (909) 944-2881 FAX 714 944-7761
77-564 Country Club Dr. Suite 400-B Palm Desert, CA 92211 P.O. Box 12817 Palm Desert, CA 92255 (619) 360-3780 FAX 619-360-3789
27349 Jefferson Suite 115 P.O. Box 340 Temecula, CA 92390 (909) 676-7710 FAX 909-699-1981

SCALE 1"= 40'
DATE NOVEMBER 1992

BENCHMARK: V.B. 10-64 ELEV: 1700.670
BRASS DISK FLUSH & MARKED V.B. 10-64, 0.6 MI E ON VAN BUREN BLVD FROM E INT VAN BUREN & WOOD RD 205' N OF VAN BUREN AT N.E. SIDE OF GRANITE BOULDERS ON TOP OF 3'X15'X18' BOULDER.

MARK	REVISIONS	APPR.	DATE
1	PAVEMENT SECTION REVISION	FRED	12/7/94

DESIGNED BY D.J.O. DRAWN BY S.L.C. CHECKED BY G.P.

FRED

CITY OF RIVERSIDE
PUBLIC WORKS DEPARTMENT

APPROVED BY	DATE	BY
PRINCIPAL ENGINEER	6/29/94	
PARK DEPARTMENT	5-12-94	
TRAFFIC DIVISION	6/29/94	
CHIEF P.W. ENGINEER	7/11/94	
	7/8/94	

APPROVED BY
PUBLIC WORKS DIRECTOR
DATE 7/12/94

CITY OF RIVERSIDE
RIVERSIDE MIDDLE SCHOOL NO. 6
APTOS STREET
STA 10+02.00 TO STA. 12+00.00
STREET IMPROVEMENT PLANS
FOR R.U.S.D. (N.T.D.)
W.O. 9212848

SHEET NO. 3
C-11
OF 5 SHTS
FILE NO. R-3341

INDEXED 7-29-94 GH

PC 3698-S

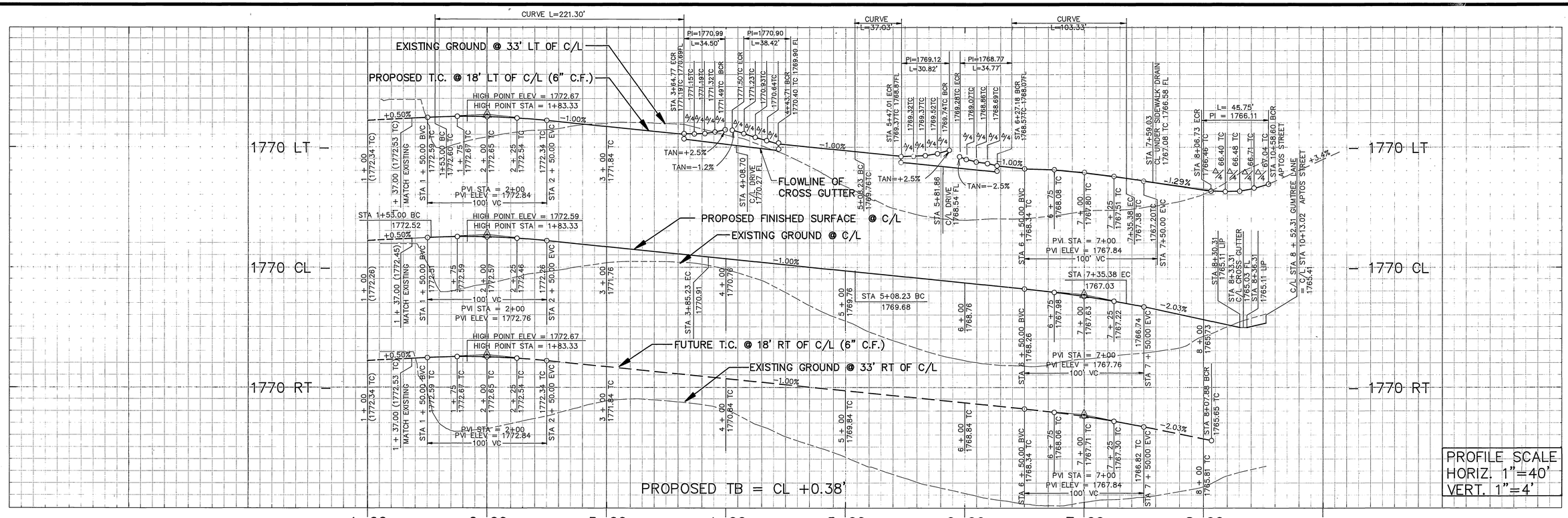

CONSTRUCTION NOTES

1. (19) CONSTRUCT 3" A.C. OVER 6" CRUSHED A.B. PER S.R. 1490 R-VALUE= 43
2. CONSTRUCT CONCRETE CURB AND GUTTER (TYPE I 6" C.F.) PER CITY OF RIVERSIDE STD. DWG. NO. 200.
3. CONSTRUCT CONCRETE SIDEWALK PER CITY OF RIVERSIDE STD. DWG. NO. 325
4. CONSTRUCT HANDICAP RAMP PER CITY OF RIVERSIDE STD. DWG. NO. 304
6. CONSTRUCT ASPHALT CONCRETE BERM (TYPE I) PER CITY OF RIVERSIDE STD. DWG. NO. 250.
7. REMOVE AND RELOCATE STREET BARRICADE PER CITY OF RIVERSIDE STD. DWG. NO. 180 (WITH W-57 SIGNS PER PLAN).
10. CONSTRUCT UNDER SIDEWALK DRAIN PER CITY OF RIVERSIDE STD. DWG. NO. 411
12. CONSTRUCT 6' WIDE CONCRETE CROSS GUTTER AND SPANDRELS PER CITY OF RIVERSIDE STD. DWG. NO. 220.
17. CONSTRUCT RIP RAP AREA, 10'X 10', 1/4 TON ROCK, 3' THICK.
18. CONSTRUCT DRIVE APPROACH PER CITY OF RIVERSIDE STD. DWG. NO. 302 TYPE V, A=24', B=38'.

O CURVE TABLE

CURVE	DELTA	RADIUS	LENGTH	TANGENT
1	33°15'51"	400.00'	232.23'	119.49'
2	32°32'10"	400.00'	227.15'	116.73'
3	33°15'51"	433.00'	251.39'	129.35'
4	32°32'10"	367.00'	208.41'	107.10'
5	33°15'51"	367.00'	213.07'	109.63'
6	32°32'10"	433.00'	245.88'	126.36'
7	90°43'40"	27.00'	45.75'	27.35'
8	73°12'11"	27.00'	34.50'	20.05'
9	146°44'09"	15.00'	38.42'	50.21'
10	117°42'34"	15.00'	30.82'	24.82'
11	73°46'26"	27.00'	34.77'	20.26'
12	30°20'00"	418.00'	221.30'	113.31'
13	05°33'17"	382.00'	37.03'	18.53'
14	15°29'54"	382.00'	103.33'	51.98'

GRAPHIC SCALE
40 0 20 40 80 160
(IN FEET)
1 inch = 40 ft.

Underground Service Alert
Call: TOLL FREE
1-800 422-4133
TWO WORKING DAYS BEFORE YOU DIG

PRIVATE ENGINEERING NOTE

CONSTRUCTION CONTRACTOR AGREES THAT IN ACCORDANCE WITH GENERALLY ACCEPTED CONSTRUCTION PRACTICES, CONSTRUCTION CONTRACTOR WILL BE REQUIRED TO ASSUME SOLE AND COMPLETE RESPONSIBILITY FOR JOB SITE CONDITIONS DURING THE COURSE OF CONSTRUCTION OF THE PROJECT, INCLUDING SAFETY OF ALL PERSONS AND PROPERTY; THAT THIS REQUIREMENT SHALL BE MADE TO APPLY CONTINUOUSLY AND NOT BE LIMITED TO NORMAL WORKING HOURS, AND CONSTRUCTION CONTRACTOR FURTHER AGREES TO DEFEND, INDEMNIFY AND HOLD DESIGN PROFESSIONAL HARMLESS FROM ANY AND ALL LIABILITY, REAL OR ALLEGED, IN CONNECTION WITH THE PERFORMANCE OF WORK ON THIS PROJECT, EXCEPTING LIABILITY ARISING FROM THE SOLE NEGLIGENCE OF DESIGN PROFESSIONAL.

REGISTERED PROFESSIONAL ENGINEER DANIEL J. O'ROURKE No. 47677 Exp.12-31-95 CIVIL STATE OF CALIFORNIA

PREPARED UNDER THE DIRECTION OF:
DANIEL J. O'ROURKE
REGISTERED CIVIL ENGINEER NO. 47677
EXPIRATION DATE: 12-31-95 DATE: 3-8-94

J.F. Davidson Associates, Inc.
ENGINEERING PLANNING SURVEYING ARCHITECTURE LANDSCAPE ARCHITECTURE

3880 Lemon Street Suite 300 P.O. Box 493 Riverside, CA 92502 (909) 686-0844 FAX 909-686-5954
3550 Shelby Street Suite 100 Ontario CA, 91764 (909) 944-2881 FAX 714 944-7761
77-564 Country Club Dr. Suite 400-B Palm Desert, CA 92211 P.O. Box 12817 Palm Desert, CA 92255 (619) 360-3780 FAX 619-360-3789
27349 Jefferson Suite 115 P.O. Box 340 Temecula, CA 92390 (909) 676-7710 FAX 909-699-1981

RIV. BUS. TAX NUMBER 4994 EXP. 12/31/93

SCALE 1" = 40'
DATE NOVEMBER 1992

BENCHMARK: V.B. 10-64 ELEV: 1700.670
BRASS DISK FLUSH & MARKED V.B. 10-64, 0.6 MI E ON VAN BUREN BLVD FROM E INT VAN BUREN & WOOD RD 205' N OF VAN BUREN AT N.E. SIDE OF GRANITE BOULDERS ON TOP OF 3'X15'X18' BOULDER.

MARK	REVISIONS	APPR.	DATE
1	PAVEMENT SECTION REVISION	FRED	10/7/94

DESIGNED BY D.J.O. DRAWN BY S.L.C. CHECKED BY G.P.

FRED

CITY OF RIVERSIDE
PUBLIC WORKS DEPARTMENT

	DATE	BY
APPROVED BY		
PRINCIPAL ENGINEER	6/29/94	
PARK DEPARTMENT	5/12/94	
TRAFFIC DIVISION	6/23/94	
CHIEF P.W. ENGINEER	7/11/94	
	7/8/94	

APPROVED BY
PUBLIC WORKS DIRECTOR
DATE 7/12/94

CITY OF RIVERSIDE
RIVERSIDE MIDDLE SCHOOL NO. 6
GUMTREE LANE
STA 1+37.00 TO STA 8+52.31
STREET IMPROVEMENT PLANS
FOR R.U.S.D. (N.T.D.)
W.O. 9212848

SHEET NO. 4
C-12
OF 5 SHTS
FILE NO. R-3341

INDEXED 7-29-94 GH PC 3698-S

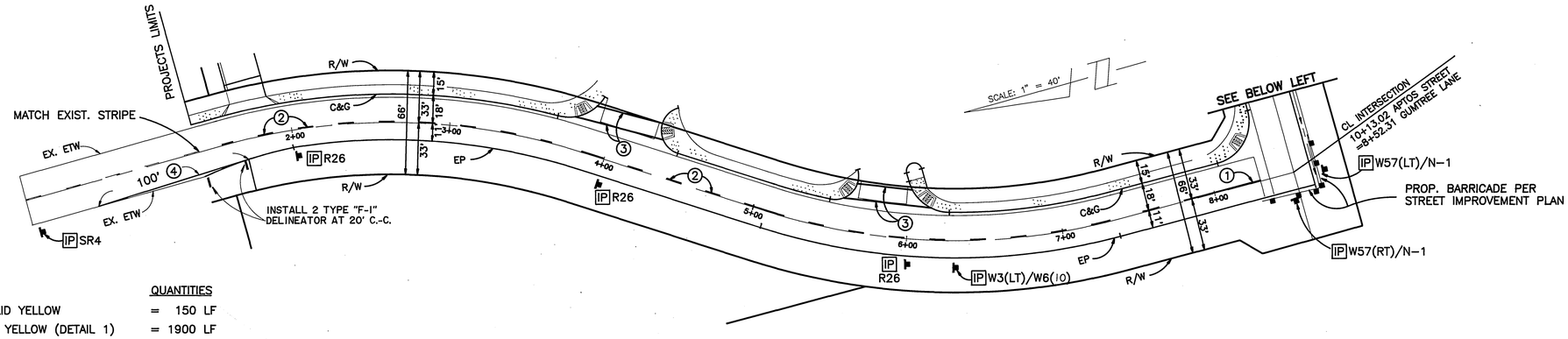

GUMTREE LANE

SIGNING, STRIPING AND PAVEMENT MARKING LEGEND

IP INSTALL SIGN (STD) AND POST

		QUANTITIES
①	PAINT 50' 4" SOLID YELLOW	= 150 LF
②	PAINT 4" DASHED YELLOW (DETAIL 1)	= 1900 LF
③	PAINT 12" SOLID YELLOW (X-WALK)	= 365 LF
④	PAINT 4" SOLID WHITE (DETAIL 27B)	= 100 LF

SIGN (STD) & POST		
R26	=	10 EA
W3(LT)	=	1 EA
W3(RT)	=	1 EA
W6(**)	=	2 EA
W57(LT)	=	1 EA
W57(RT)	=	1 EA
N-1	=	2 EA
SR4	=	1 EA
POST	=	15 EA
F-1	=	2 EA.

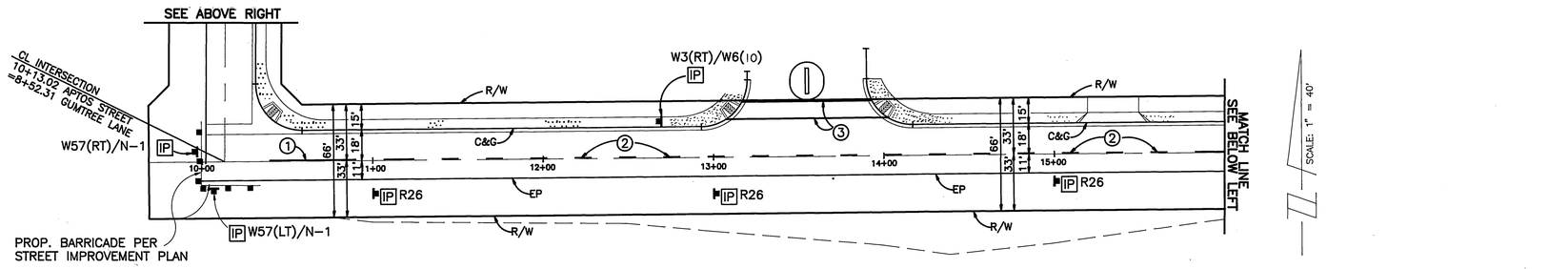

APTOS STREET

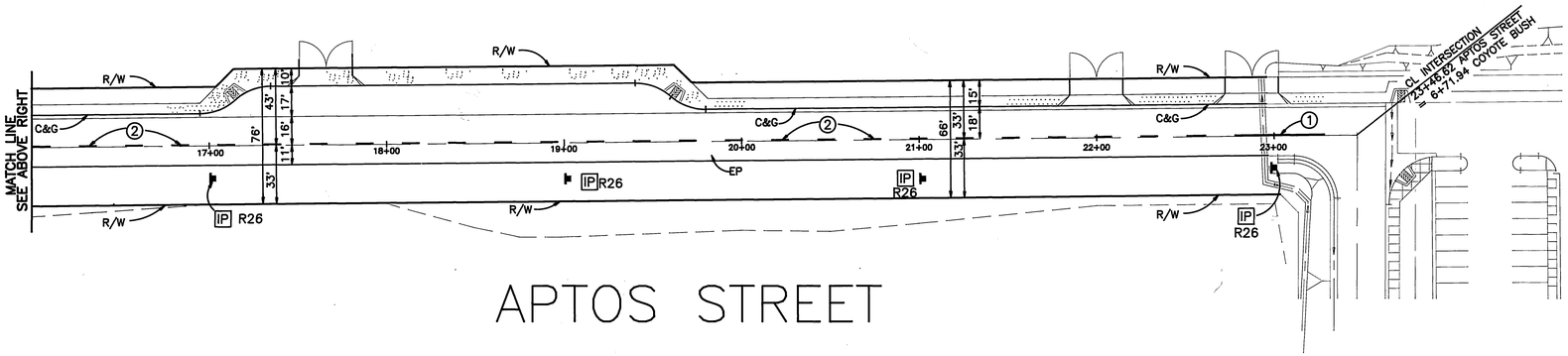

APTOS STREET

40 20 0 40 80 120

SCALE IN FEET

Underground Service Alert
Call: TOLL FREE
1-800
422-4133
TWO WORKING DAYS BEFORE YOU DIG

PRIVATE ENGINEERING NOTE

CONSTRUCTION CONTRACTOR AGREES THAT IN ACCORDANCE WITH GENERALLY ACCEPTED CONSTRUCTION PRACTICES, CONSTRUCTION CONTRACTOR WILL BE REQUIRED TO ASSUME SOLE AND COMPLETE RESPONSIBILITY FOR JOB SITE CONDITIONS DURING THE COURSE OF CONSTRUCTION OF THE PROJECT, INCLUDING SAFETY OF ALL PERSONS AND PROPERTY; THAT THIS REQUIREMENT SHALL BE MADE TO APPLY CONTINUOUSLY AND NOT BE LIMITED TO NORMAL WORKING HOURS, AND CONSTRUCTION CONTRACTOR FURTHER AGREES TO DEFEND, INDEMNIFY AND HOLD DESIGN PROFESSIONAL HARMLESS FROM ANY AND ALL LIABILITY, REAL OR ALLEGED, IN CONNECTION WITH THE PERFORMANCE OF WORK ON THIS PROJECT, EXCEPTING LIABILITY ARISING FROM THE SOLE NEGLIGENCE OF DESIGN PROFESSIONAL.

REGISTERED PROFESSIONAL ENGINEER
JAMES B. DOBBINS
No. 18
Exp. 3/31/96
TRAFFIC
STATE OF CALIFORNIA

PREPARED UNDER THE DIRECTION OF:
JAMES B. DOBBINS
REGISTERED TRAFFIC ENGINEER NO. 18
EXPIRATION DATE: 3-31-96 DATE: 3/20/94

J.F. Davidson Associates, Inc.
ENGINEERING PLANNING SURVEYING ARCHITECTURE LANDSCAPE ARCHITECTURE
RIV. BUS. TAX NUMBER 4994
EXP. 12/31/93
3880 Lemon Street Suite 300 P.O. Box 493 Riverside, CA 92502 (909) 686-0844 FAX 909-686-5954
3550 Shelby Street Suite 100 Ontario CA, 91764 (909) 944-2681 FAX 714 944-7761
77-564 Country Club Dr. Suite 402-B Palm Desert, CA 92211 P.O. Box 12827 Palm Desert, CA 92255 (619) 360-3780 FAX 619-360-3789
27349 Jefferson Suite 115 P.O. Box 340 Temecula, CA 92390 (909) 676-7710 FAX 909-699-1981

SCALE 1"=40'
DATE NOVEMBER 1992

BENCHMARK: V.B. 10-64 ELEV: 1700.670
BRASS DISK FLUSH & MARKED V.B. 10-64, 0.6 MI E ON VAN BUREN BLVD FROM E INT VAN BUREN & WOOD RD 205' N OF VAN BUREN AT N.E. SIDE OF GRANITE BOULDERS ON TOP OF 3'X1.5'X1' BOULDER.

MARK	REVISIONS	APPR.	DATE
DESIGNED BY V.R.L.	DRAWN BY K.T.O.	CHECKED BY V.R.L.	

CITY OF RIVERSIDE
PUBLIC WORKS DEPARTMENT

APPROVED BY	DATE	BY
PRINCIPAL ENGINEER	6/20/94	BC
PARK DEPARTMENT	—	—
TRAFFIC DIVISION	6/22/94	CD
CHIEF P.W. ENGINEER	7/11/94	RMG
	7/8/94	VRL

APPROVED BY
PUBLIC WORKS DIRECTOR
DATE 7/12/94

CITY OF RIVERSIDE
RIVERSIDE MIDDLE SCHOOL No. 6
GUMTREE LANE
APTOS STREET
SIGNING AND STRIPING PLAN
FOR R.U.S.D.(N.T.D.)
W.O. 9212848

SHEET NO. 5 C-13
OF 5 SHTS
FILE NO. R-3341

FRED

INDEXED 7-29-94 GH

PC 3698-S