STREET IMPROVEMENT PLANS
CITY OF RIVERSIDE, CALIFORNIA

GENERAL NOTES:

1. NO PERSON SHALL PERFORM ANY CONSTRUCTION ACTIVITY OR INSTALL ANY OBJECTS WITHIN THE PUBLIC RIGHTS-OF-WAY OR EASEMENTS OF THE CITY OF RIVERSIDE WITHOUT A VALID CONSTRUCTION PERMIT OR, A STREET OPENING PERMIT OR AN ENCROACHMENT PERMIT ISSUED BY THE CITY'S PUBLIC WORKS DEPARTMENT.
2. IT SHALL BE THE RESPONSIBILITY OF THE CONTRACTOR TO CLEAR THE RIGHT OF WAY IN ACCORDANCE WITH THE PROVISIONS OF LAW AS IT AFFECTS EACH UTILITY INCLUDING IRRIGATION LINES AND APPURTENANCES AND AT NO COST TO THE CITY.
3. CONSTRUCTION SHALL BE IN ACCORDANCE WITH THE CITY OF RIVERSIDE DEPARTMENT OF PUBLIC WORKS, STANDARD DRAWINGS, ITS SUPPLEMENTAL NOTES AND THE STANDARD SPECIFICATIONS FOR PUBLIC WORKS CONSTRUCTION, CURRENT EDITION.
4. THE PRIVATE ENGINEER SIGNING THESE PLANS IS RESPONSIBLE FOR ASSURING THE ACCURACY AND ACCEPTABILITY OF THE WORK HEREON. IN THE EVENT OF DISCREPANCIES ARISING DURING CONSTRUCTION, THE PRIVATE ENGINEER SHALL BE RESPONSIBLE FOR DETERMINING AN ACCEPTABLE SOLUTION AND REVISING THE PLANS FOR APPROVAL BY THE CITY.
5. THE DEVELOPER SHALL BE RESPONSIBLE FOR PRESERVING OR REESTABLISHING AND REFERENCING SURVEY MONUMENTS DESTROYED, DISTURBED OR BURIED AS A RESULT OF CONSTRUCTION SHOWN HEREON.
6. ALL FLAGGED ELEVATIONS SHALL BE STAKED IN THE FIELD BY PRIVATE ENGINEER.
7. TRIM EDGE OF EXISTING PAVEMENT WHERE NEW PAVEMENT JOINS TO A SMOOTH, STRAIGHT LINE. CONSTRUCT MATCH-UP PAVING AS SHOWN ON PLAN AND OVERLAY PAVING AS DIRECTED IN THE FIELD TO PRODUCE A SMOOTH SECTION.
8. ANY TRAFFIC CONTROL STRIPING OBLITERATED AND/OR BADLY WORN DURING CONSTRUCTION SHALL BE RESTORED BY THE CONTRACTOR WITHIN FIVE DAYS AFTER NOTIFICATION FROM THE CITY INSPECTORS.
9. FINAL STRIPING FOR TRAFFIC CONTROL AND/OR PAVEMENT MARKING TO BE THE RESPONSIBILITY OF THE DEVELOPER.
10. THE CONTRACTOR SHALL CALL IN A LOCATION REQUEST TO UNDERGROUND SERVICE ALERT (USA), PHONE # 1-800-227-2600, TWO WORKING DAYS BEFORE DIGGING. NO CONSTRUCTION PERMIT WILL BE ISSUED BY THE PUBLIC WORKS DEPARTMENT INVOLVING EXCAVATION FOR UNDERGROUND FACILITIES UNLESS THE APPLICANT HAS BEEN PROVIDED AN INQUIRY IDENTIFICATION NUMBER BY U.S.A.
11. IN PAVEMENT OVERLAY AREAS, DISTRESSED EXISTING PAVEMENT SHALL BE REMOVED AND REPLACED AS DIRECTED BY THE INSPECTOR PRIOR TO OVERLAYING WITH A.C. PAVING.
12. DEVELOPER/CONTRACTOR TO GIVE CITY WATER DIVISION FIVE (5) WORKING DAYS WRITTEN NOTICE PRIOR TO START OF CONSTRUCTION AND TO ALLOW CITY TEN (20) WORKING DAYS FOR COMPLETION OF WORK. (909) 351-6150.
13. ALL TRAFFIC SIGNS SHALL BE INSTALLED PRIOR TO OPENING THE STREETS TO TRAFFIC.
14. CONSTRUCT DRIVEWAY APPROACHES PER STANDARD DRAWING 302. EXACT SIZE AND LOCATION TO BE STAKED BY THE PRIVATE ENGINEER PRIOR TO CONSTRUCTION OF THE CURB AND GUTTER.
15. THE SUBDIVIDER SHALL ARRANGE FOR A SOIL TEST TO BE MADE BY A SOILS ENGINEER AFTER THE STREETS HAVE BEEN PREPARED TO ROUGH GRADE AND PRIOR TO CURB AND GUTTER CONSTRUCTION. DEPTH OF BASE MATERIAL AND A.C. PAVING SHALL BE DETERMINED BY THE CITY OF RIVERSIDE DESIGN STANDARDS AND TEST PROCEDURES.
16. ON ALL AREAS WITHIN PUBLIC RIGHT OF WAY WHERE THE FILL IS ONE (1) FOOT OR GREATER, A LETTER WILL BE REQUIRED FROM THE SOILS ENGINEER, CERTIFYING THE COMPACTION OF THE FILL BELOW SUBGRADE, PRIOR TO ISSUANCE OF THE CONSTRUCTION PERMIT/CUT SHEETS.
17. BEFORE THE RIP-RAP AT THE OUTLET OF ANY DRAINAGE STRUCTURE IS ACCEPTED BY THE CITY, IT SHALL BE TESTED UNDER FLOWS AS CLOSE AS POSSIBLE TO DESIGN CONDITIONS WITH WATER OBTAINED FROM FIRE HYDRANTS IN THE IMMEDIATE AREA.
18. THE CONTRACTOR SHALL COORDINATE TRENCHING FOR CABLE TELEVISION WITH OTHER TRENCHING WITHIN THE SUBDIVISION.

STREET TREE NOTES:

1. ALL RELATED WORK SHALL CONFORM TO THE CITY OF RIVERSIDE PARK AND RECREATION DEPARTMENT STANDARDS AND CITY OF RIVERSIDE STREET TREE POLICIES.
2. WHEN CALLING FOR INSPECTIONS CONTACT THE STREET TREE INSPECTOR A MINIMUM OF 48 HOURS IN ADVANCE AT (909) 351-6126 TO SCHEDULE AN INSPECTION. A FIELD NOTICE WILL BE ISSUED AS WRITTEN APPROVAL FOR EACH STAGE OF INSPECTION. A VERBAL APPROVAL WILL NOT BE ACCEPTABLE. INSPECTIONS ARE REQUIRED:
   a. AFTER COMPLETION OF FINAL GRADING OF THE LOTS AND WHEN ALL UTILITY SERVICES AND SEWER LATERAL HAVE BEEN MARKED, BUT PRIOR TO DIGGING PLANT PITS, ALL FINAL STREET TREE LOCATIONS ARE TO BE SPOTTED IN THE FIELD BY THE STREET TREE INSPECTOR;
   b. WHILE DIGGING PLANT PITS AND PLANTING/RELOCATING TREES;
   c. AFTER PLANTING AND ALL OTHER INDICATED OR SPECIFIED WORK HAS BEEN COMPLETED, FOR START OF MAINTENANCE;
   d. AT END OF THE MAINTENANCE PERIOD, THE CONTRACTOR DEVELOPER SHALL CALL THE STREET TREE INSPECTOR AT (909) 351-6126 FOR A FINAL ACCEPTANCE INSPECTION IN ORDER TO BE RELEASED FROM MAINTENANCE. DEVELOPER BONDS WILL NOT BE RELEASED UNTIL AFTER RECEIPT OF WRITTEN NOTIFICATION FOR THE CITY THAT THE TREES PASS FINAL INSPECTION AND THE PARK AND RECREATION DEPARTMENT IS ASSUMING MAINTENANCE RESPONSIBILITIES.
3. ALL STREET TREES ARE TO BE PLANTED PRIOR TO OCCUPANCY.
4. THE DEVELOPER SHALL BE RESPONSIBLE TO ACCEPTABLY MAINTAIN ALL PLANTINGS FOR A MINIMUM PERIOD OF ONE (1) YEAR.
5. STREET TREE PLANTING SHALL BE AS FOLLOWS:

STREET NAME	BOTANICAL NAME\COMMON NAME	MIN. SIZE	APPROX. SPACING	* NUMBER REQUIRED
A. APOSTLE LANE	JACARANDA ACUTIFOLIA/JACARANDA	15 GAL	45' O.C.	40 EA.
B. OLD BRIDGE ROAD	CINNAMOMUM CAMPHORA/CAMPHOR	15 GAL	45' O.C.	5 EA.

6. A "STREET OPENING PERMIT" AS ISSUED BY THE PUBLIC WORKS DEPARTMENT ARE REQUIRED PRIOR TO COMMENCEMENT OF TREE RELOCATION AND/OR REMOVAL WORK. FOR ALL EXISTING TREES WITHIN WHAT WILL ULTIMATELY BE THE PUBLIC RIGHT-OF-WAY PAVEMENT AREA, BACKFILL OF ALL HOLES MUST BE INSPECTED BY THE PUBLIC WORKS INSPECTOR FOR PROPER COMPACTION.
7. ALL STREET TREES MUST BE AUTOMATICALLY IRRIGATED.

* NOTE: IN THE INTEREST OF PUBLIC SAFETY AND MAINTENANCE THE STREET TREE INSPECTOR SHALL HAVE THE AUTHORITY TO REVISE THE STREET TREE QUANTITIES AND LOCATIONS SHOWN ON APPROVED PLANS BASED UPON FIELD CONDITIONS FOUND AT THE TIME OF INSTALLATION OF THE TREES.

CONSTRUCTION NOTES AND QUANTITIES:

(1)	CONSTRUCT CURB AND GUTTER PER CITY OF RIVERSIDE STD. 200. (6" C.F.).	1,785.4 LF
(2)	CONSTRUCT ____ A.C. OVER ____ A.B. PER S.R. _____ R= ____	29,892.8 SF
(3)	REMOVE EXISTING FENCE.	112.7 LF
(4)	CONSTRUCT SIDEWALK PER CITY OF RIVERSIDE STD. 325	10,267.4 SF
(5)	INSTALL "NOT A THROUGH STREET" SIGN PER CITY OF RIVERSIDE STD. 666.	1 EA
(6)	CONSTRUCT 24" RCP, D = 2000	263.43 LF
(7)	CONSTRUCT 14' WIDE CATCH BASIN PER CITY OF RIVERSIDE STD. 405.	1 LS
(8)	CONSTRUCT RIP-RAP PAD PER DETAIL "H".	1 LS
(9)	CONSTRUCT PIPE BRACE AS PER AMERICAN PUBLIC WORKS ASSOCIATION -SOUTHERN CALIFORNIA CHAPTER (GREEN BOOK) STANDARD PLAN 221-0	3 EA.
(10)	CONSTRUCT PIPE HEADWALL PER CALTRANS STANDARD D-89 (DETAIL-"FRONT ELEVATION HEADWALL")	1 LS
(11)	CONSTRUCT PIPE COLLAR AT GRADE BREAK PER CITY OF RIVERSIDE STANDARD DRAWING #424	1 LS

LEGEND

(T.C.)	EX. TOP OF CURB
(F.S.)	EX. FINISHED SURFACE
T.C.	TOP OF CURB
F.S.	FINISHED SURFACE
C.L.	CENTER LINE
R.W.	RIGHT OF WAY
B.C.R.	BEGIN CURB RETURN
E.C.R.	END CURB RETURN
S	SLOPE
STA.	STATION

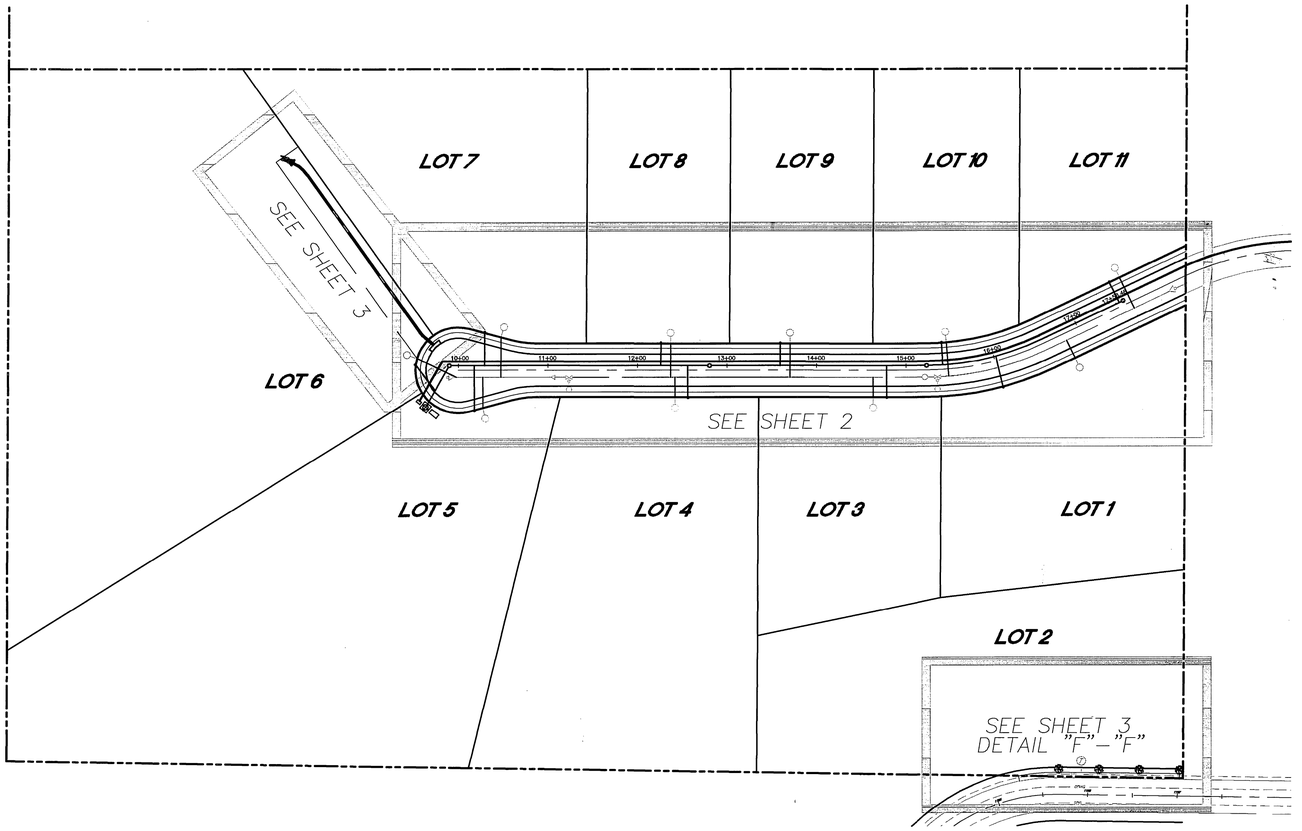

INDEX MAP

SCALE: 1"=80'

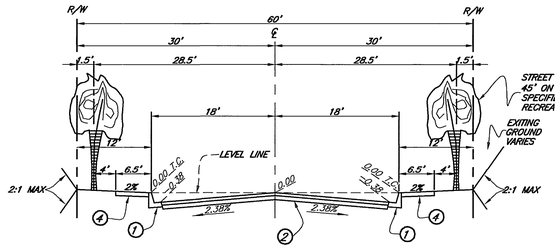

TYPICAL SECTION APOSTLE LANE

NOT TO SCALE
T.I. = 5

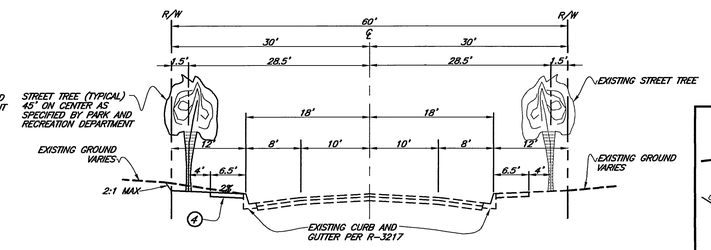

TYPICAL SECTION OLD BRIDGE ROAD

NOT TO SCALE
T.I. = 5

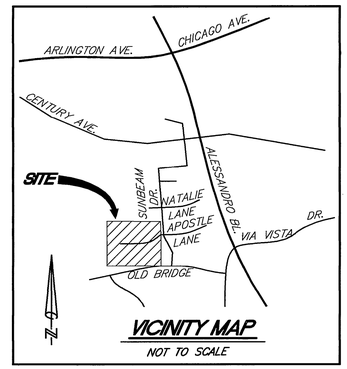

VICINITY MAP

NOT TO SCALE

BENCHMARK

POINT ID: F7-J3 ELEV.: 1302.588
P.K. NAIL AND CITY ENGINEER TAG SET IN THE NORTHERLY WALL OF A CATCH BASIN ALONG THE EASTERLY CURB OF ALESSANDRO BLVD., APPROXIMATELY 300' SOUTHEASTERLY OF EL PORTAL

CITY BUSINESS TAX CERTIFICATE NO. 062688 EXP. 04/10/99

Land Development LDC Consultants
CIVIL ENGINEERING SURVEYING LAND PLANNING
5029 La Mart Dr. Suite E, Riverside, CA 92507
(909) 684-9815

REGISTERED PROFESSIONAL ENGINEER BRIAN G. ESGATE No. 21884 Exp. 9-30-01 CIVIL STATE OF CALIFORNIA

PREPARED UNDER THE SUPERVISION OF:

BRIAN G. ESGATE DATE 6/29/99

R.C.E.# 21884 EXP.: 9-30-01

MARK	REVISIONS	APPR.	DATE

DESIGNED BY F.I. DRAWN BY F.I. CHECKED BY B.G.E.

CITY OF RIVERSIDE, CALIFORNIA
PUBLIC WORKS DEPARTMENT

APPROVED BY	BY	DATE
P.W. ENGINEERING MANAGER		
PRINCIPAL ENGINEER		
STREET SERVICES		
TRAFFIC DIVISION		
PARKS DEPARTMENT		

APPROVED BY
PUBLIC WORKS DIRECTOR
DATE 9-3-99

TRACT NO. 28774
APOSTLE LANE
STA 10+00.00 TO STA 18+34.00

HORIZ. SCALE: 1" = 40' VERT. SCALE: 1" = 4'

R-3498

SHEET 1 OF 4

JOB NO. 97149

PC-4109-S

INDEXED 9-16-99 GH

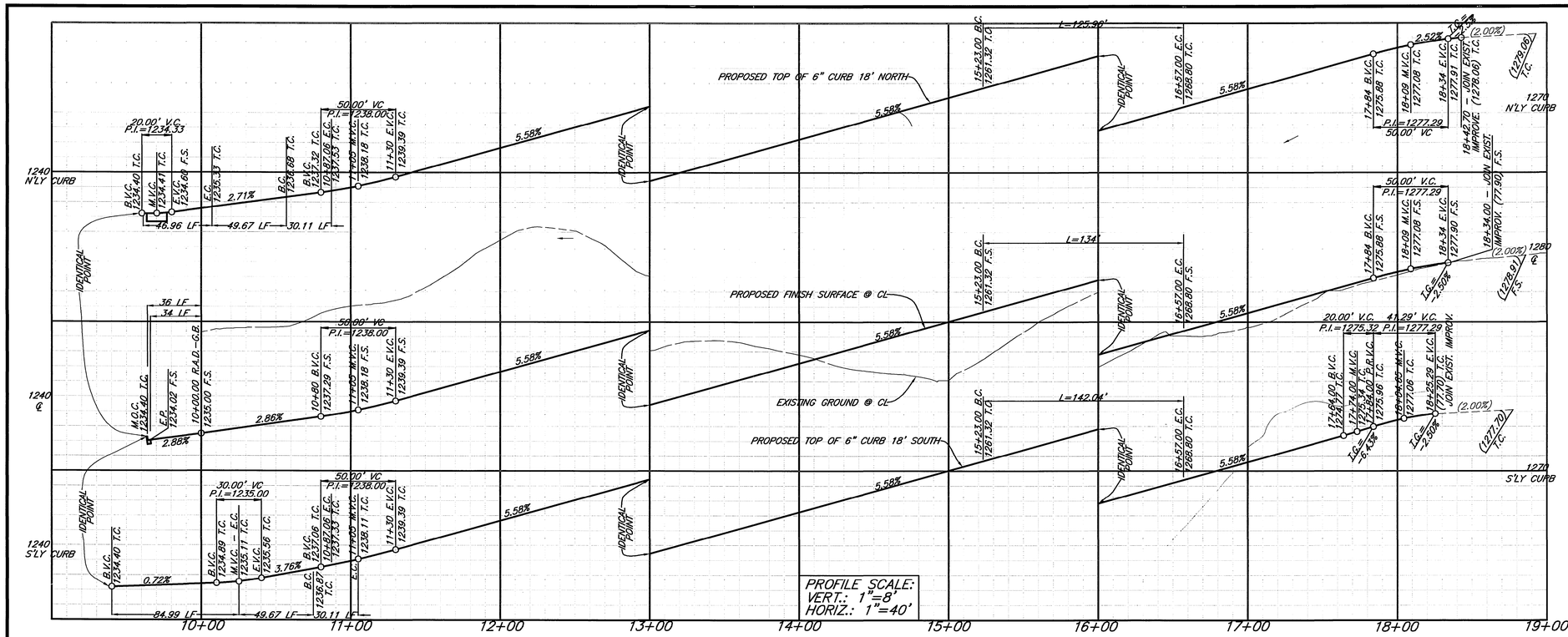

CONSTRUCTION NOTES AND QUANTITIES:

1	CONSTRUCT CURB AND GUTTER PER CITY OF RIVERSIDE STD. 200. (6" C.F.).	1,785.4 LF
2	CONSTRUCT ____ A.C. OVER ____ A.B. PER S.R. ____ R= ____	29,892.8 SF
3	REMOVE EXISTING FENCE.	112.7 LF
4	CONSTRUCT SIDEWALK PER CITY OF RIVERSIDE STD. 325	10,267.4 SF
5	INSTALL "NOT A THROUGH STREET" SIGN PER CITY OF RIVERSIDE STD. 666.	1 EA
6	CONSTRUCT 24" RCP, D = 2000	263.43 LF
7	CONSTRUCT 14' WIDE CATCH BASIN PER CITY OF RIVERSIDE STD. 405.	1 LS
8	CONSTRUCT RIP-RAP PAD PER DETAIL "H".	1 LS
9	CONSTRUCT PIPE BRACE AS PER AMERICAN PUBLIC WORKS ASSOCIATION -SOUTHERN CALIFORNIA CHAPTER (GREEN BOOK) STANDARD PLAN 221-0	3 EA.
10	CONSTRUCT PIPE HEADWALL PER CALTRANS STANDARD D-89 (DETAIL-"FRONT ELEVATION HEADWALL")	1 LS
11	CONSTRUCT PIPE COLLAR AT GRADE BREAK PER CITY OF RIVERSIDE STANDARD DRAWING #424	1 LS

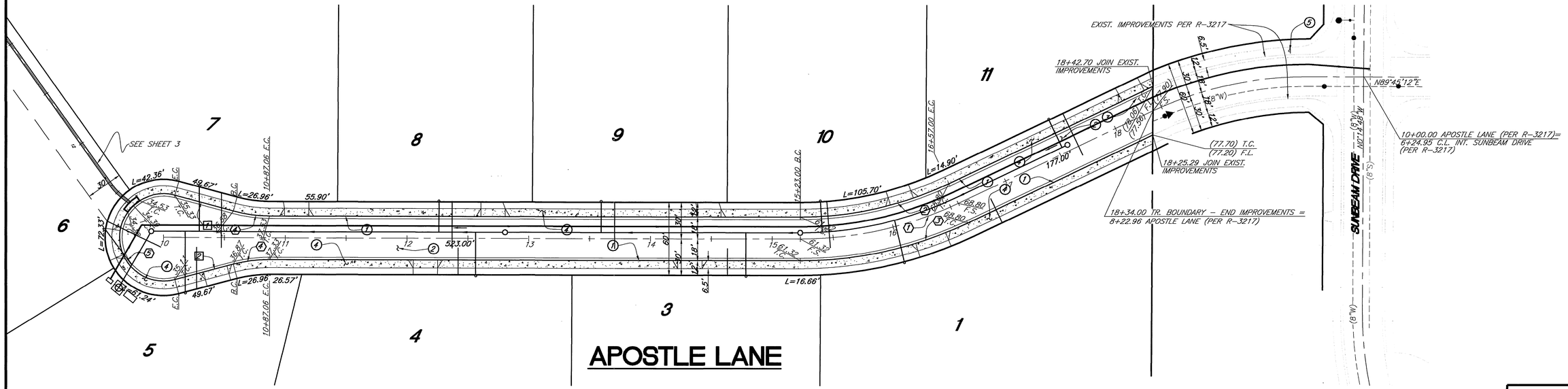

APOSTLE LANE

LINE DATA

	BEARING	LENGTH
1	N74°56'42"W	49.67'
2	N75°03'22"E	49.67

CURVE DATA

	Δ	R	L	T
1	25°35'32"	300.00'	134.00'	68.14'
2	25°35'32"	282.00'	125.96'	64.05'
3	25°35'32"	318.00'	142.04'	72.23'
4	15°00'00"	115.00'	30.11'	15.14'
5	210°00'00"	36.00'	131.95'	--

40 0 40 80 120

Scale 1" = 40'

BENCHMARK

POINT ID: F7-J3 ELEV.: 1302.588
P.K. NAIL AND CITY ENGINEER TAG SET IN THE NORTHERLY WALL OF A CATCH BASIN ALONG THE EASTERLY CURB OF ALESSANDRO BLVD., APPROXIMATELY 300' SOUTHEASTERLY OF EL PORTAL

Underground Service Alert
CALL BEFORE YOU DIG
CALL:TOLL FREE
1-800
227-2600
TWO WORKING DAYS BEFORE YOU DIG

Land Development LDC Consultants
CIVIL ENGINEERING SURVEYING LAND PLANNING
5029 La Mart Dr. Suite E, Riverside, CA 92507
(909) 684-9615

REGISTERED PROFESSIONAL ENGINEER BRIAN G. ESGATE No. 21884 Exp. 9-30-01 CIVIL STATE OF CALIFORNIA

PREPARED UNDER THE SUPERVISION OF:
BRIAN G. ESGATE 6/29/99 DATE
R.C.E.#: 21884 EXP.: 9-30-01

MARK	REVISIONS	APPR.	DATE

DESIGNED BY F.I. DRAWN BY F.I. CHECKED BY B.G.E.

CITY OF RIVERSIDE, CALIFORNIA
PUBLIC WORKS DEPARTMENT

APPROVED BY	BY	DATE
P.W. ENGINEERING MANAGER		9/3/99
PRINCIPAL ENGINEER		9/3/99
STREET SERVICES		
TRAFFIC DIVISION		
PARKS DEPARTMENT		6/29/99

APPROVED BY R. McGrath
PUBLIC WORKS DIRECTOR
DATE 9-3-99

TRACT NO. 28774
STREET PLAN AND PROFILE
APOSTLE LANE
STA 10+00.00 TO STA 18+34.00

R-3498

SHEET 2 OF 4

HORIZ. SCALE: 1" = 40' VERT. SCALE: 1" = 8'

JOB NO. 97149

PC-4109-S

INDEXED 9-16-99 EH

File: S:\DRAWINGS\FRAME_RT\97149\SP\97149S2.dwg Plotted: 1999-06-29 07:06:47

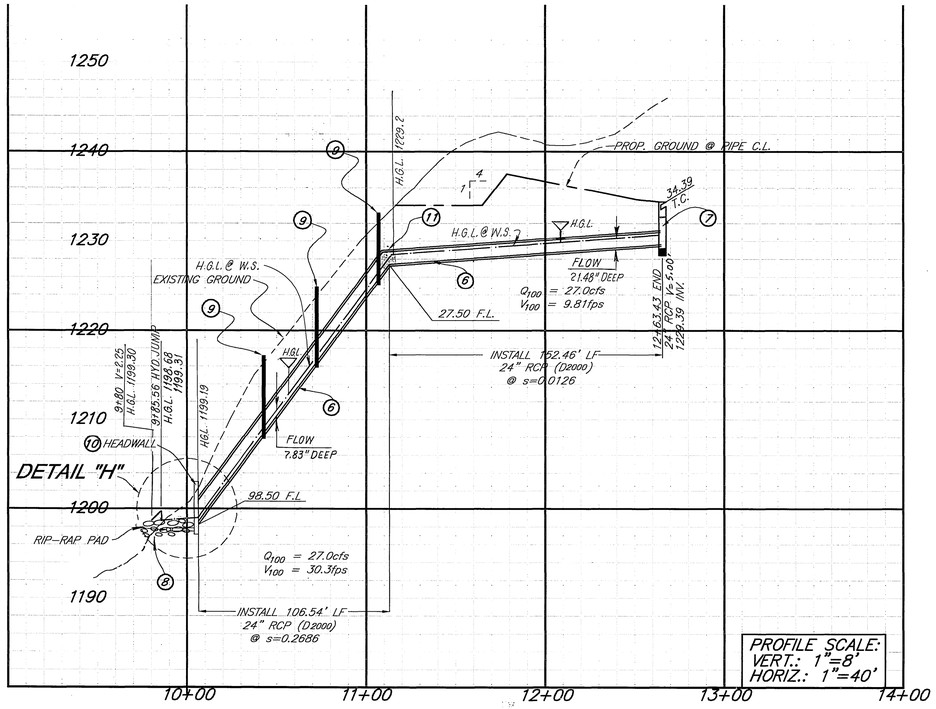

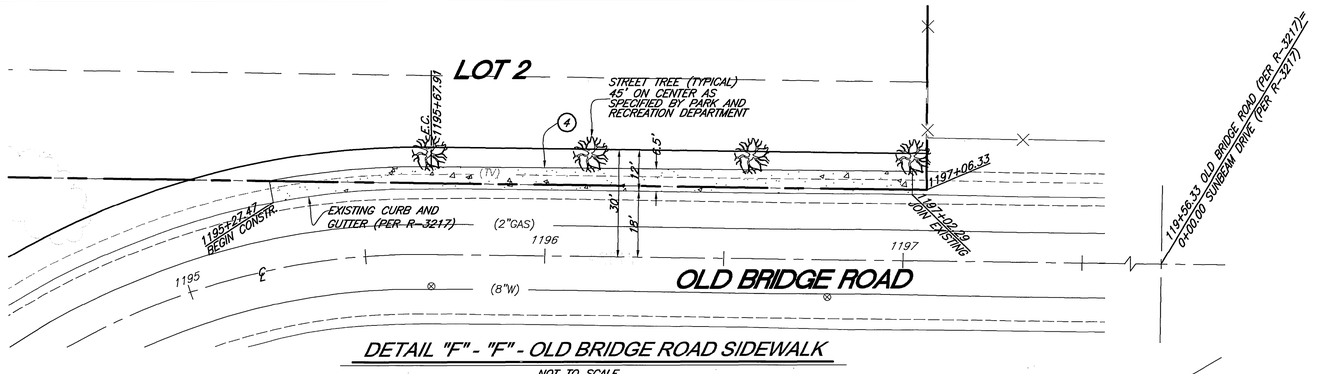

DETAIL "F" - "F" - OLD BRIDGE ROAD SIDEWALK

NOT TO SCALE

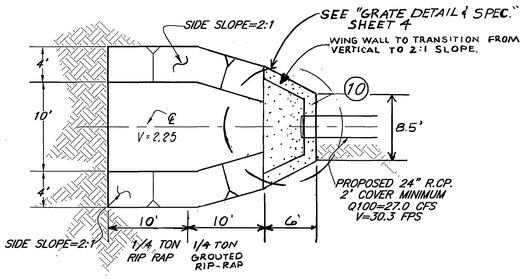

DETAIL "H" (8)

NOT TO SCALE

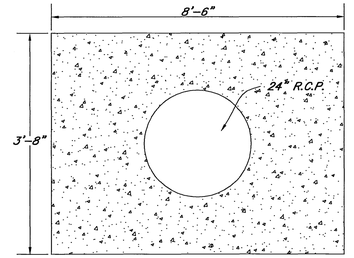

FOR CONSTRUCTION DETAILS SEE PIPE HEADWALL CALTRANS NO. D-89

FRONT ELEVATION HEADWALL (10)

NOT TO SCALE

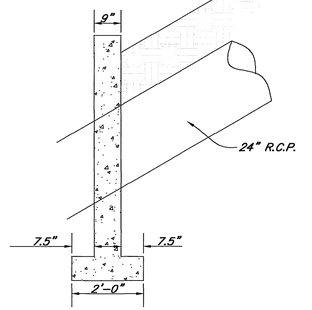

SECTION HEADWALL

NOT TO SCALE

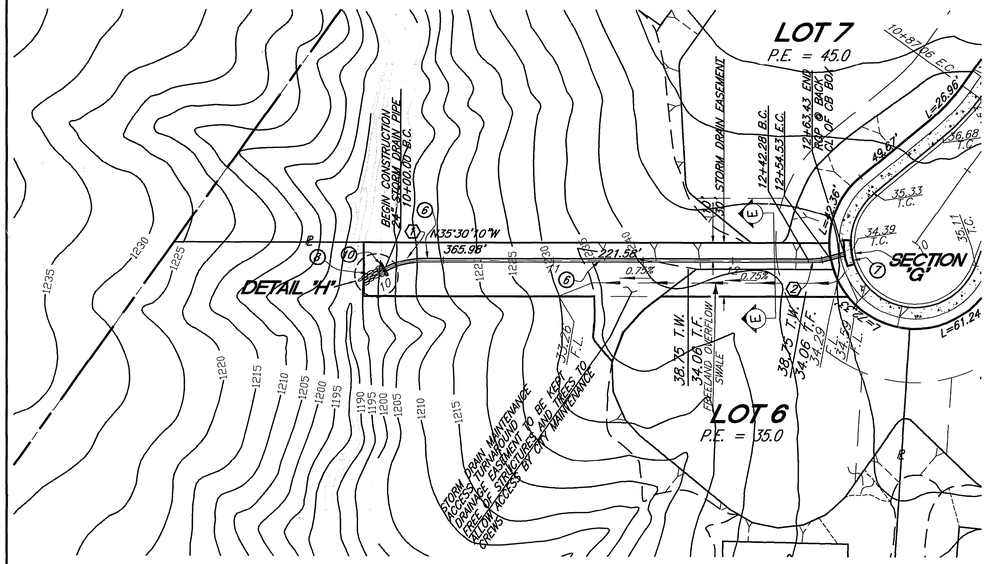

CURVE DATA				
	Δ	R	L	T
①	34°15'36"	45.00'	26.91'	13.87'
②	15°06'12"	45.00'	11.86'	5.97'

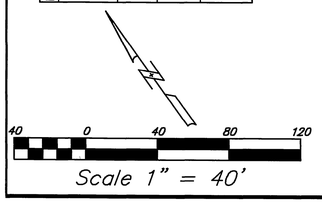

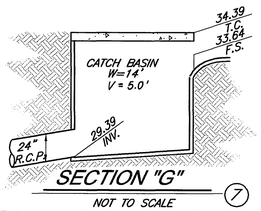

SECTION "G" (7)

NOT TO SCALE

SEE RIVERSIDE STD. DWG. NO. 405 FOR MORE DETAIL

BENCHMARK

POINT ID: F7-13 ELEV.: 1302.588
P.K. NAIL AND CITY ENGINEER TAG SET IN THE NORTHERLY WALL OF A CATCH BASIN ALONG THE EASTERLY CURB OF ALESSANDRO BLVD., APPROXIMATELY 300' SOUTHEASTERLY OF EL PORTAL

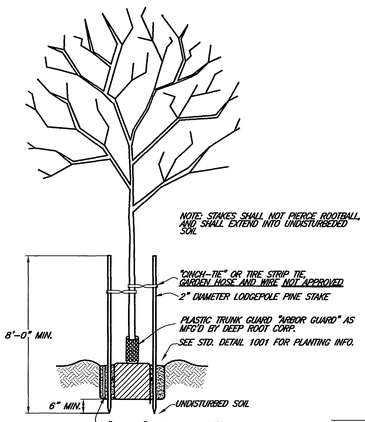

DOUBLE STAKING DETAIL

NOT TO SCALE

SECTION

NOT TO SCALE

PLANTING NOTES

1 CONTACT THE STREET TREE INSPECTOR AT 909-351-6126 TWO WORKING DAYS (48 HOURS) PRIOR TO INSTALLING ANY PLANT MATERIAL

2 TREES PLANTED IN TURF AREAS SHALL BE MAINTAINED WITH A MINIMUM 12" RADIUS AROUND THE TREE FREE OF TURF THROUGHOUT THE MAINTENANCE PERIOD

3 WATERING BASINS MAY BE REMOVED AFTER THE MAINTENANCE PERIOD

4 FOR STAKING INFORMATION AS APPLICABLE, REFER TO "DOUBLE STAKING DETAIL" ON THIS SHEET

5 FOR GUYING INFORMATION, REFER TO STANDARD DETAIL 1003

6 FOR SPECIFICATION INFORMATION, REFER TO CITY OF RIVERSIDE PARK AND RECREATION DEPARTMENT STANDARD SPECIFICATIONS, SECTION 02480 PLANTING

7 PROVIDE FERTILIZER TABLETS AS FOLLOWS:

1 GALLON PLANT	2 TABLETS
5 GALLON PLANT	3 TABLETS
15 GALLON PLANT	5 TABLETS
24" BOX PLANT	8 TABLETS

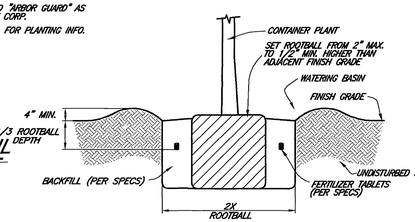

PLANTING DETAIL

NOT TO SCALE

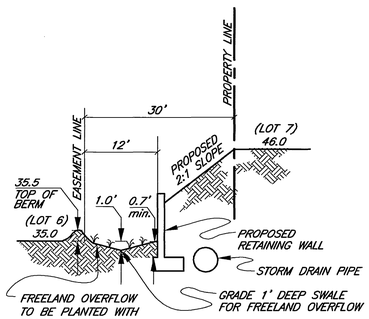

SECTION "E-E"

NOT TO SCALE

CONSTRUCTION NOTES:

1	CONSTRUCT CURB AND GUTTER PER CITY OF RIVERSIDE STD. 200. (6" C.F.).	1,785.4 LF
2	CONSTRUCT ____ A.C. OVER ____ A.B. PER S.R. _____ R= ____	29,892.8 SF
3	REMOVE EXISTING FENCE.	112.7 LF
4	CONSTRUCT SIDEWALK PER CITY OF RIVERSIDE STD. 325	10,267.4 SF
5	INSTALL "NOT A THROUGH STREET" SIGN PER CITY OF RIVERSIDE STD. 666.	1 EA
6	CONSTRUCT 24" RCP, D = 2000	263.43 LF
7	CONSTRUCT 14' WIDE CATCH BASIN PER CITY OF RIVERSIDE STD. 405.	1 LS
8	CONSTRUCT RIP-RAP PAD PER DETAIL "H".	1 LS
9	CONSTRUCT PIPE BRACE AS PER AMERICAN PUBLIC WORKS ASSOCIATION -SOUTHERN CALIFORNIA CHAPTER (GREEN BOOK) STANDARD PLAN 221-0	3 EA.
10	CONSTRUCT PIPE HEADWALL PER CALTRANS STANDARD D-89 (DETAIL- "FRONT ELEVATION HEADWALL")	1 LS
11	CONSTRUCT PIPE COLLAR AT GRADE BREAK PER CITY OF RIVERSIDE STANDARD DRAWING #424	1 LS

Underground Service Alert
CALL TOLL FREE
1-800
227-2600

Land Development LDC Consultants
CIVIL ENGINEERING SURVEYING LAND PLANNING
5029 La Mart Dr. Suite E, Riverside, CA 92507
(909) 684-9815

REGISTERED PROFESSIONAL ENGINEER BRIAN G. ESGARE No. 21884 Exp. 9-30-01 CIVIL STATE OF CALIFORNIA

PREPARED UNDER THE SUPERVISION OF:

BRIAN G. ESGATE DATE 6/21/99
R.C.E.#: 21884 EXP.: 9-30-01

MARK	REVISIONS	APPR.	DATE

DESIGNED BY AW/KE DRAWN BY AW CHECKED BY BGE

CITY OF RIVERSIDE, CALIFORNIA
PUBLIC WORKS DEPARTMENT

APPROVED BY	BY	DATE
P.W. ENGINEERING MANAGER		9/7/99
PRINCIPAL ENGINEER		9/7/99
STREET SERVICES		9/7/99
TRAFFIC DIVISION		9/7/99
PARKS DEPARTMENT		9/7/99

APPROVED BY R. McGrath
PUBLIC WORKS DIRECTOR
DATE 9-3-99

TRACT NO. 28774
APOSTLE LANE
STA 10+00.00 TO STA 18+34.00

R-3498

SHEET 3 OF 4

HORIZ. SCALE: 1" = 40' VERT. SCALE: 1" = 4'

JOB NO. 97149

PC-4109-S

INDEXED 9-16-99 GH

File: S:\DRAWINGS\FRAME_RT\97-149\DGN\971H653.dwg Plotted: 1999-06-29 07:02:11

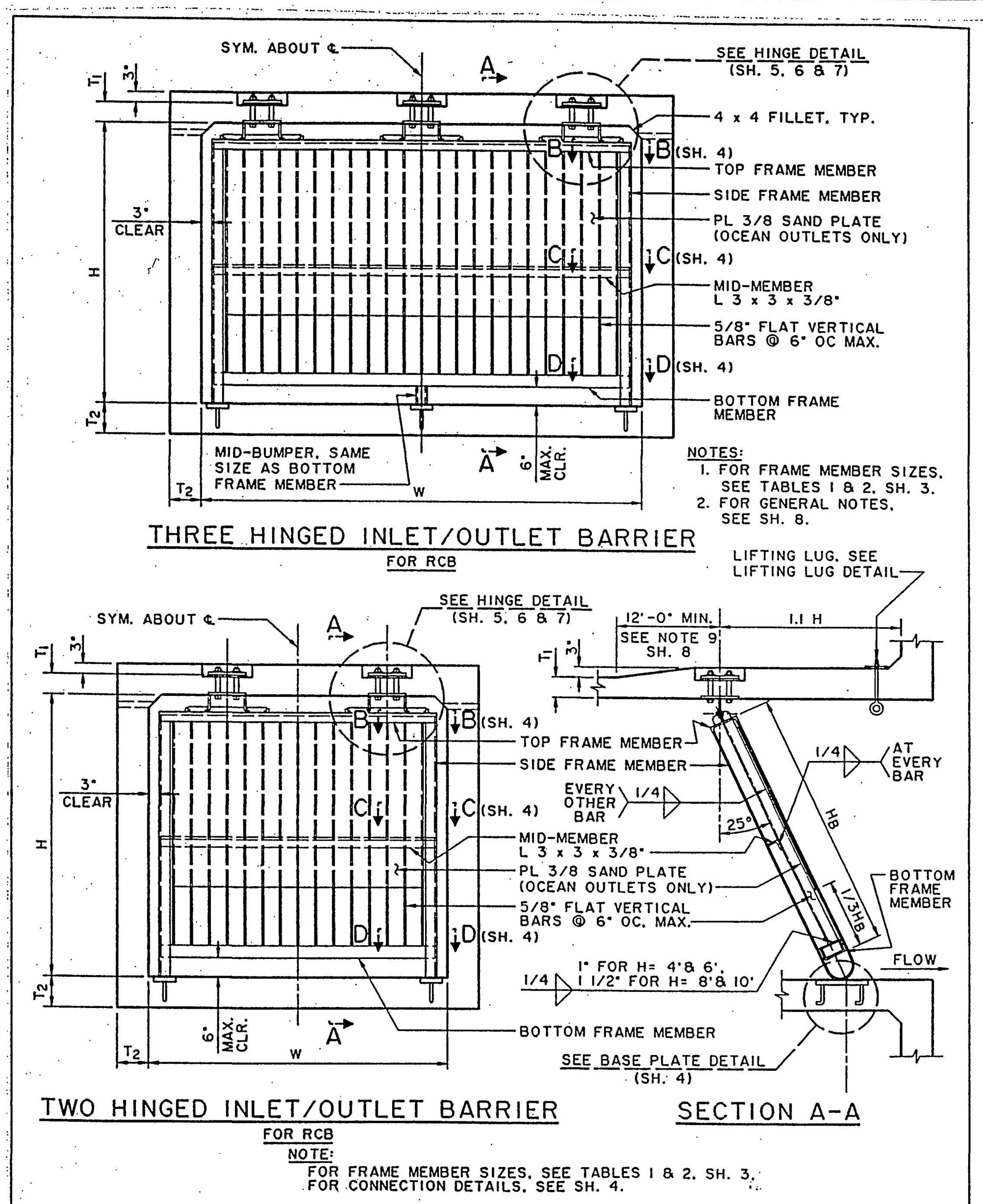

AMERICAN PUBLIC WORKS ASSOCIATION - SOUTHERN CALIFORNIA CHAPTER

PROMULGATED BY THE PUBLIC WORKS STANDARDS INC., GREENBOOK COMMITTEE 1993

SLOPED PROTECTION BARRIER

USE WITH STANDARD SPECIFICATIONS FOR PUBLIC WORKS CONSTRUCTION

STANDARD PLAN 360 - 0 SHEET 1 OF 8

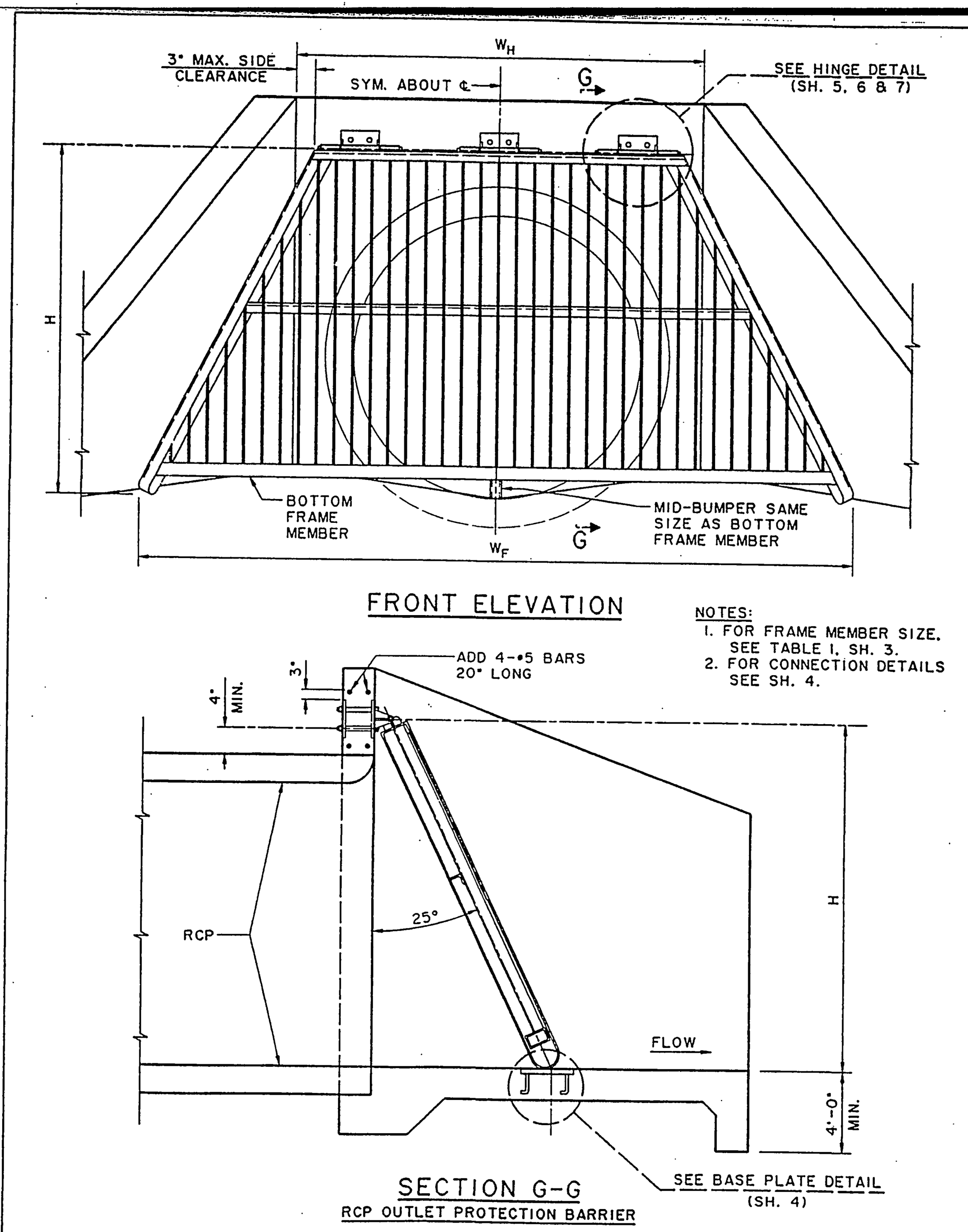

AMERICAN PUBLIC WORKS ASSOCIATION - SOUTHERN CALIFORNIA CHAPTER

SLOPED PROTECTION BARRIER

STANDARD PLAN 360 - 0 SHEET 2 OF 8

TABLE 1: INLET/OUTLET SLOPED PROTECTION BARRIER

STANDARD INLET/OUTLET, BOX OR PIPE, RECTANGULAR OR TRAPEZOIDAL SHAPED PROTECTION BARRIERS.

NOTE 1: FOR TRAPEZOIDAL SHAPED PROTECTION BARRIERS, USE W_H TO DETERMINE NUMBER AND SIZE OF HINGES, AND USE W_F TO DETERMINE REQUIRED FRAME MEMBER SIZES. (FOR W_H AND W_F, SEE SH. 2)

BOX SIZE W x H (FT.)	NO. OF HINGES	HINGE SIZE	VERTICAL BAR SIZE (INCHES)	TOP FRAME MEMBER SIZE	SIDE FRAME MEMBER SIZE	BOTTOM FRAME MEMBER SIZE
4x4	2	12"	1x1/2	C 4x7.25	C 4x7.25	TS 2x2x.250
4x6	2	12"	2x1/2	C 4x7.25	C 4x7.25	TS 2x2x.250
4x8	2	12"	3x1/2	C 5x9	C 5x9	TS 3x3x.250
6x4	2	18"	1x1/2	C 4x7.25	C 4x7.25	TS 2x2x.250
6x6	2	18"	2x1/2	C 4x7.25	C 4x7.25	TS 2.5x2.5x.250
6x8	2	18"	3x1/2	C 5x9	C 5x9	TS 3.5x3.5x.250
6x10	2	18"	4 1/2x1/2	C 6x10.5	C 6x10.5	TS 4.5x4.5x.250
8x4	3	12"	1x1/2	C 4x7.25	C 4x7.25	TS 2x2x.250
8x6	3	12"	2x1/2	C 4x7.25	C 4x7.25	TS 2.5x2.5x.250
8x8	3	12"	3x1/2	C 5x9	C 5x9	TS 3x3x.250
8x10	3	12"	4 1/2x1/2	C 6x10.5	C 6x10.5	TS 4.5x4.5x.250
10x6	3	18"	2x1/2	C 4x7.25	C 4x7.25	TS 2.5x2.5x.250
10x8	3	18"	3x1/2	C 5x9	C 5x9	TS 3.5x3.5x.250
10x10	3	18"	4 1/2x1/2	C 6x10.5	C 6x10.5	TS 4.5x4.5x.250
12x6	3	24"	2x1/2	C 5x9	C 5x9	TS 3x3x.250
12x8	3	24"	3x1/2	C 5x9	C 5x9	TS 3.5x3.5x.250
12x10	3	24"	4 1/2x1/2	C 6x10.5	C 6x10.5	TS 4.5x4.5x.250
14x6	3	24"	2x1/2	C 5x9	C 5x9	TS 3x3x.250
14x8	3	24"	3x1/2	C 6x10.5	C 6x10.5	TS 4x4x.250
14x10	3	24"	4 1/2x1/2	C 7x12.25	C 7x12.25	TS 5x5x.250

TABLE 2: OCEAN OUTLET SLOPED PROTECTION BARRIER

BOX OCEAN OUTLET PROTECTION BARRIERS WITH OR WITHOUT SAND BARRIER PLATE.

BOX SIZE W x H (FT.)	NO. OF HINGES	HINGE SIZE	VERTICAL BAR SIZE (INCHES)	TOP FRAME MEMBER SIZE	SIDE FRAME MEMBER SIZE	BOTTOM FRAME MEMBER SIZE
4x4	2	12"	2 1/2x5/8	C 5x9	C 5x9	TS 3x3x.250
4x6	2	12"	3 3/4x5/8	C 6x13	C 6x8.2	TS 4x2x.313
4x8	2	12"	5 1/4x5/8	C 8x18.75	C 8x11.5	TS 6x2x.250
6x4	2	18"	2 1/2x5/8	C 6x13	C 6x8.2	TS 4x3x.313
6x6	2	18"	3 3/4x5/8	C 6x13	C 6x8.2	TS 4x4x.500
6x8	2	18"	5 1/4x5/8	C 8x18.75	C 8x11.5	TS 6x4x.375
6x10	2	18"	6 1/2x5/8	C 9x20	C 9x13.4	TS 7x4x.375
8x4	3	12"	2 1/2x5/8	C 5x9	C 5x9	TS 3x3x.250
8x6	3	12"	3 3/4x5/8	C 6x13	C 6x8.2	TS 4x3x.250
8x8	3	12"	5 1/4x5/8	C 8x18.75	C 8x11.5	TS 6x2x.250
8x10	3	12"	6 1/2x5/8	C 9x20	C 9x13.4	TS 7x3x.250
10x6	3	18"	3 3/4x5/8	C 6x13	C 6x8.2	TS 4x4x.313
10x8	3	18"	5 1/4x5/8	C 8x18.75	C 8x11.5	TS 6x4x.313
10x10	3	18"	6 1/2x5/8	C 9x20	C 9x13.4	TS 7x3x.313
12x6	3	24"	3 3/4x5/8	C 7x14.75	C 7x9.8	TS 5x4x.313
12x8	3	24"	5 1/4x5/8	C 8x18.75	C 8x11.5	TS 6x4x.375
12x10	3	24"	6 1/2x5/8	C 9x20	C 9x13.4	TS 7x4x.375
14x6	3	24"	3 3/4x5/8	C 8x18.75	C 8x11.5	TS 6x4x.375
14x8	3	24"	5 1/4x5/8	C 8x18.75	C 8x11.5	TS 6x6x.375
14x10	3	24"	6 1/2x5/8	C 9x20	C 9x13.4	TS 7x5x.500

AMERICAN PUBLIC WORKS ASSOCIATION - SOUTHERN CALIFORNIA CHAPTER

SLOPED PROTECTION BARRIER

STANDARD PLAN 360 - 0 SHEET 3 OF 8

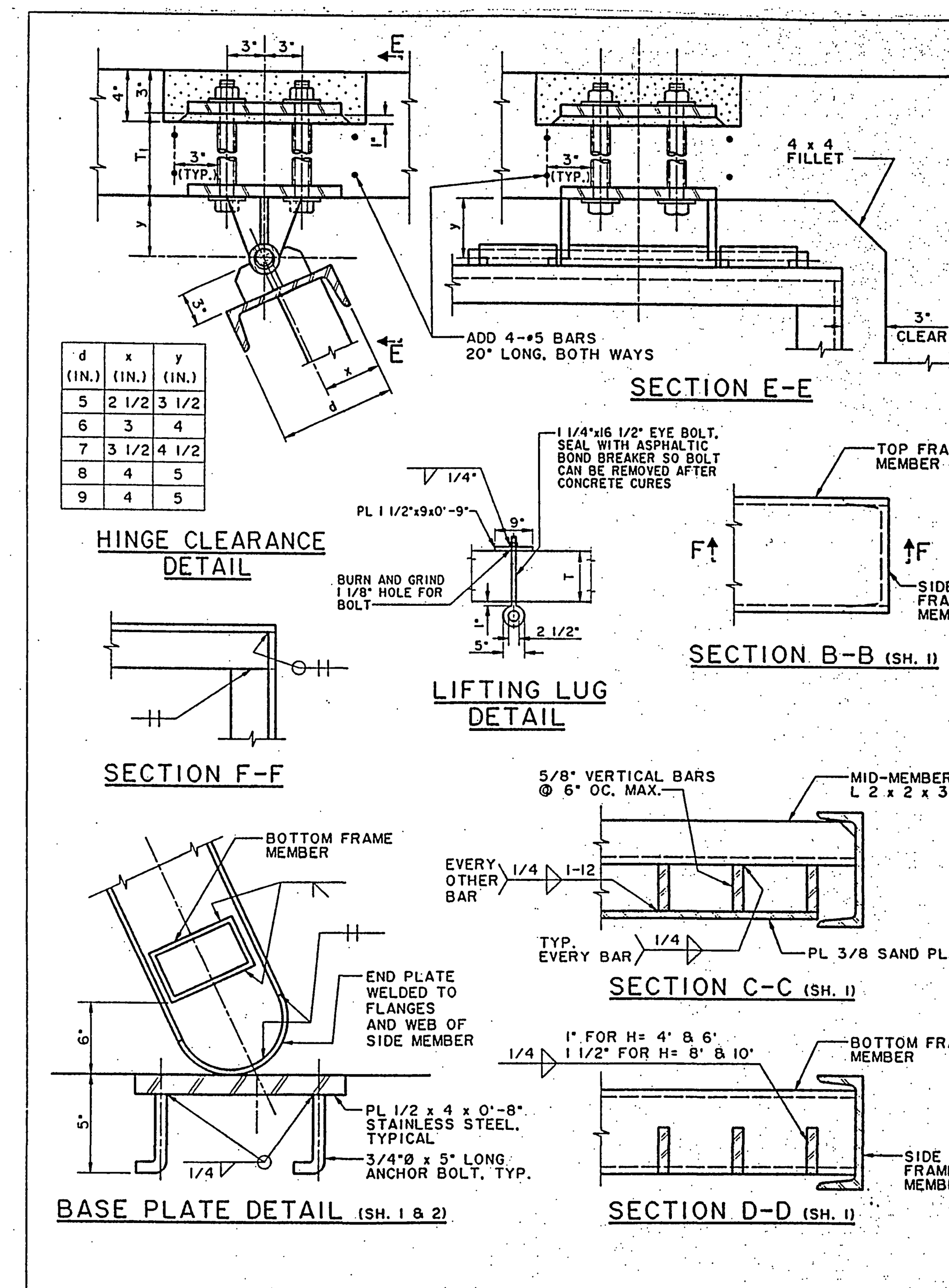

AMERICAN PUBLIC WORKS ASSOCIATION - SOUTHERN CALIFORNIA CHAPTER

SLOPED PROTECTION BARRIER

STANDARD PLAN 360 - 0 SHEET 4 OF 8

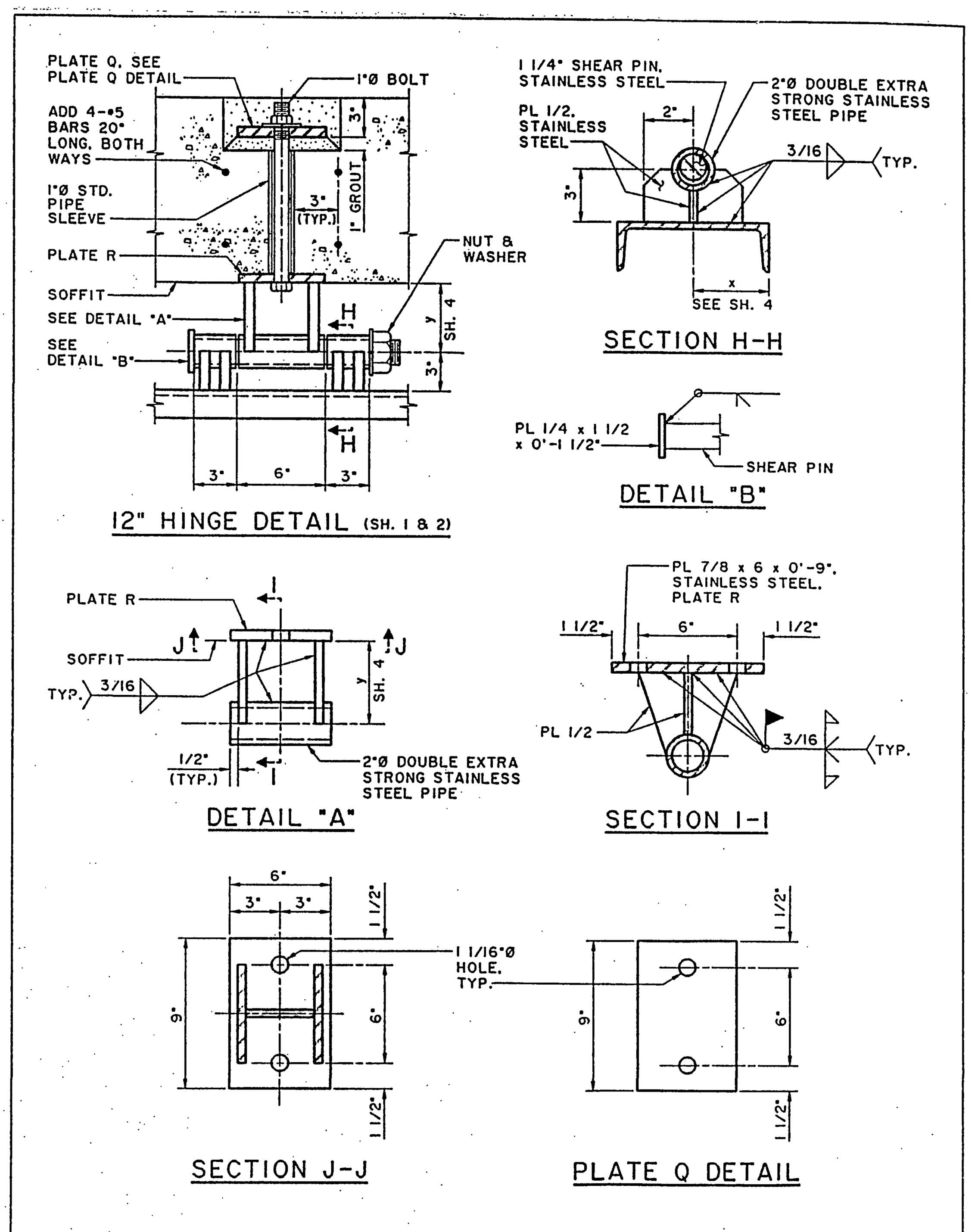

AMERICAN PUBLIC WORKS ASSOCIATION - SOUTHERN CALIFORNIA CHAPTER

SLOPED PROTECTION BARRIER

STANDARD PLAN 360 - 0 SHEET 5 OF 8

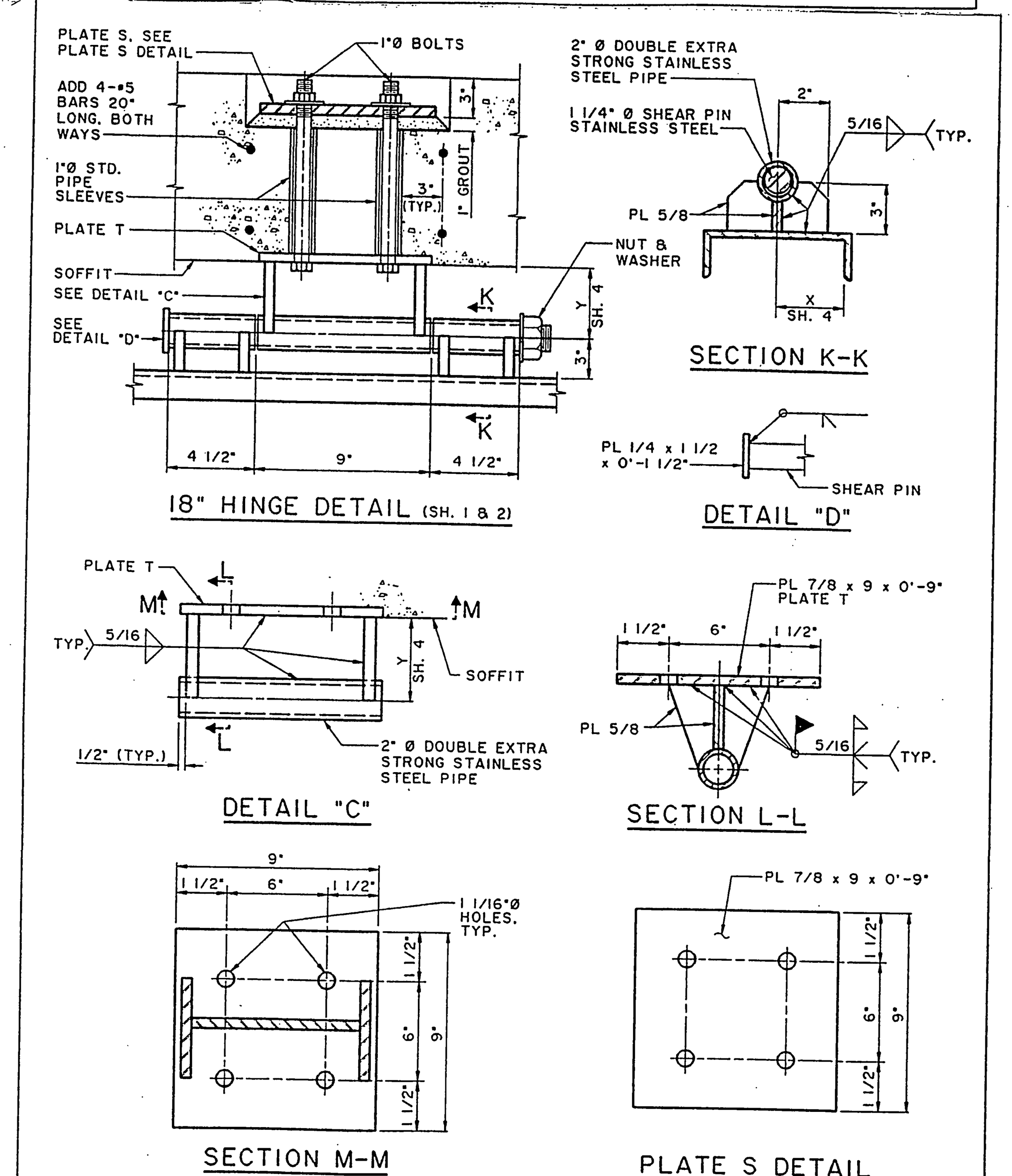

AMERICAN PUBLIC WORKS ASSOCIATION - SOUTHERN CALIFORNIA CHAPTER

SLOPED PROTECTION BARRIER

STANDARD PLAN 360 - 0 SHEET 6 OF 8

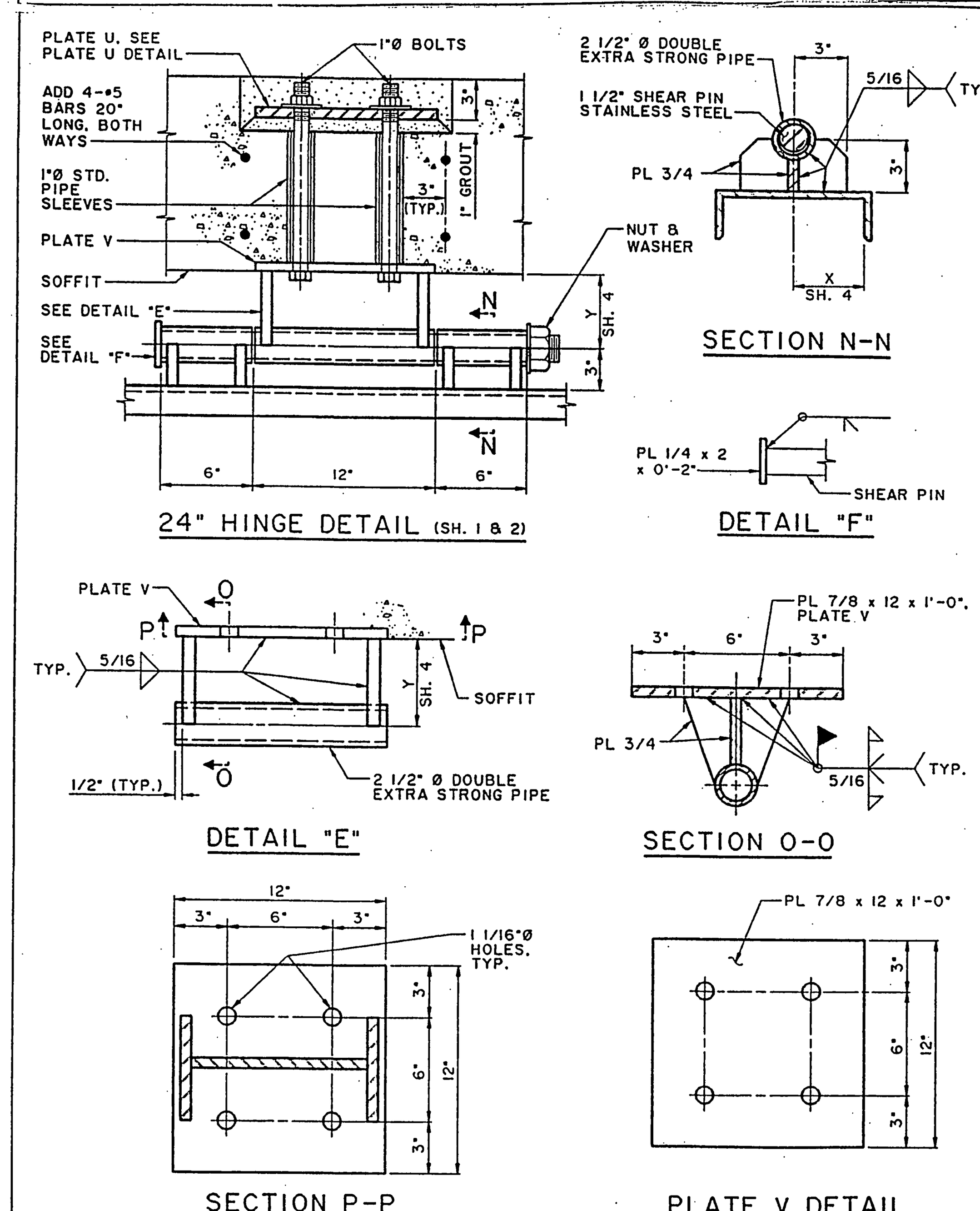

AMERICAN PUBLIC WORKS ASSOCIATION - SOUTHERN CALIFORNIA CHAPTER

SLOPED PROTECTION BARRIER

STANDARD PLAN 360 - 0 SHEET 7 OF 8

NOTES

1. WHENEVER RCB SIZE FALLS BETWEEN SIZES SHOWN ON THE TABLE, THE NEXT LARGER SIZE SHALL BE USED.
2. ALL FRAME MEMBERS SHALL BE ASTM A 36 STEEL OR BETTER.
3. ALL HINGE ASSEMBLIES AND BASE PLATES SHALL BE STAINLESS STEEL.
4. THE CONTRACTOR SHALL MAKE ANY NECESSARY MODIFICATIONS TO ALLOW FOR THE SIMPLE REMOVAL OR INSERTION OF HINGE PINS IN ORDER TO INSTALL OR REMOVE THE PROTECTION BARRIER. ENDS OF HINGE PINS SHALL BE THREADED IN ORDER THAT NUTS AND LOCK WASHERS WILL BE FLUSH WITH THE HINGE PIPE. THREADS BEYOND THE NUT FACE SHALL BE DAMAGED TO PREVENT REMOVAL.
5. ALL FRAME MEMBERS SHALL BE GALVANIZED AFTER FABRICATION.
6. IF FIELD WELDS ARE NECESSARY, GALVICON, GALVALLOY OR AGENCY APPROVED EQUAL SHALL BE USED FOR COATING.
7. MID-BUMPER SHALL BE USED FOR 3 HINGED BARRIERS.
8. ANY DEVIATIONS OR MODIFICATIONS TO THIS STANDARD SHALL BE APPROVED BY THE AGENCY.
9. AT OCEAN OUTLETS OR WHEREVER THE TOP SLAB SERVES AS A PUBLIC WALKWAY, THE TOP SLAB THICKNESS SHALL BE INCREASED BY 3" IN ORDER TO PROVIDE A RECESS FOR THE HINGE TOP PLATE. THE RECESS SHALL BE BACKFILLED WITH GROUT AND SMOOTHED AS SHOWN.
10. PROTECTION BARRIERS FOR RCB CONDUITS SHALL BE SLOPED TO SWING OPEN IN THE DIRECTION OF FLOW.
11. MEMBERS SHALL BE SELECTED FROM TABLE 1 UNLESS OTHERWISE NOTED.
12. DESIGN LOADS:
    A. INLET/OUTLET: BULKED EFD = 85 PCF
    B. OCEAN OUTLETS:
        1. 1800 PSF @ SAND PLATE AREA
        2. 600 PSF @ LOWER OPEN AREA

AMERICAN PUBLIC WORKS ASSOCIATION - SOUTHERN CALIFORNIA CHAPTER

SLOPED PROTECTION BARRIER

STANDARD PLAN 360 - 0 SHEET 8 OF 8

Land Development LDC Consultants
CIVIL ENGINEERING SURVEYING LAND PLANNING
5029 La Mart Dr. Suite E, Riverside, CA 92507
(909) 684-9615

REGISTERED PROFESSIONAL ENGINEER BRIAN G. ESGATE No. 21884 Exp. 9-30-01 CIVIL STATE OF CALIFORNIA

PREPARED UNDER THE SUPERVISION OF:
BRIAN G. ESGATE 8/24/99 DATE
R.C.E.#: 21884 EXP.: 9-30-01

MARK	REVISIONS	APPR.	DATE

DESIGNED BY ______ DRAWN BY ______ CHECKED BY ______

CITY OF RIVERSIDE, CALIFORNIA
PUBLIC WORKS DEPARTMENT

APPROVED BY	BY	DATE
P.W. ENGINEERING MANAGER	TRB	9/3/99
PRINCIPAL ENGINEER		8/23/99
STREET SERVICES	JM	8/23/99
TRAFFIC DIVISION		
PARKS DEPARTMENT		8/23/99

APPROVED BY R. McGrath PUBLIC WORKS DIRECTOR
DATE 9-3-99

TRACT NO. 28774
APOSTLE LANE
STA 10+00.00 TO STA 18+34.00

HORIZ. SCALE: VERT. SCALE:

R-3498

SHEET 4 OF 4

JOB NO. 97149

PC-4109-S

INDEXED 9-16-99 GH

File: S:\DRAWINGS\FRAME_RT\97149\SIP\97149S4.dwg Plotted: 1999-08-17 16:20:28