ARCHITERRA DESIGN GROUP

LANDSCAPE ARCHITECTURAL CONSTRUCTION DOCUMENTS
FOR

ALESSANDRO BLVD. MEDIAN ISLANDS EAST & WEST OF NORTHROP DR.

City of Riverside, California

SHEET KEY MAP:

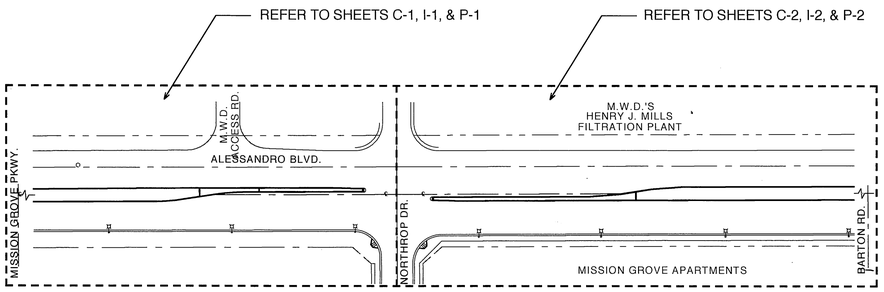

N.T.S.

NORTH

ABBREVIATIONS:

A.B.	Anchor Bolt	Int.	Integral
A.C.	Asphaltic Concrete	J. Box	Junction Box
Adj.	Adjacent	Jts.	Joints
Alt.	Alternate	L.A.	Landscape Architect
Arch.	Architect	Lic.	Licensed
Auto.	Automatic	L.P.	Low Point
Bldg.	Building	Max.	Maximum
Blk.	Black	M.B.	Machine Bolt
B.M.	Bench Mark	Mech.	Mechanical
B.S.	Bottom of Steps	Med.	Medium
C.B.	Catch Basin	Min.	Minimum
C.F.	Cubic Foot	M.H.	Manhole
C.I.	Cast Iron	Multi.	Multi-branched
C.I.P.	Cast Iron Pipe	Nat.	Natural
C.J.	Cold Joint	N.I.C.	Not in Contract
C.L.	Center Line	O.C.	On Center
Clr.	Clearance	O.D.	Outside Diameter
C.O.	Clean Out	P.A.	Planting Area
C.M.P.	Corrugated Metal Pipe	Perf.	Perforated
Comp.	Compacted	P.O.C.	Point of Connection
Con.	Concrete	P.S.I.	Pounds Per Square
Cond.	Condition	P.T.	Pressure Treated
Cont.	Continuous	P.V.C.	Poly Vinyl Chloride
Ctr.	Center	R.	Radius
Ctr. Sink	Counter Sink	R.C.P.	Reinforced Concrete
D.D.	Deck Drain	Rebar	Reinforcing Bar
D.F.	Douglas Fir	Rein.	Reinforcing
D.G.	Decomposed Granite	Req'd.	Required
Dia.	Diameter	Ret.	Retardant
Dim.	Dimension	Rgh.	Rough
Dtl.	Detail	R.S.	Rough Sawn
Ea.	Each	R.S.R.	Rough Sawn Redwood
E.J.	Expansion Joint	Rwd.	Redwood
Elec.	Electric	Sch.	Schedule
Elev.	Elevation	S.F.	Square Foot
Eng.	Engineer	Sht.	Sheet
Esp.	Espalier	Sht. Mtl.	Sheet Metal
Eq.	Equal	Sim.	Similar
E.W.	Each Way	S.L.	Scoreline
E.W.W.M.	Electric Welded Wire Mesh	Smth.	Smooth
Ex.	Existing	Specs.	Specifications
Exp.	Exposed	Sq.	Square
F.F.	Finish Floor Elevation	Stl.	Steel
F.G.	Finish Grade	T.A.D.	Top of Area Drain
F.H.	Fire Hydrant	T & B	Top and Bottom
Fin.	Finish	T.B.	Top of Berm
F.L.	Flow Line	T.C.	Top of Curb
Flt.	Flat	Tex.	Textured
F.O.C.	Face of Curb	T.G.	Top of Grade
F.S.	Finish Surface	T.G.D.	Top of Grade Drain
Ftg.	Footing	Thk.	Thick
Ftn.	Fountain	T.P.	Top of Paving
Ga.	Gauge	T.P.C.	Top of Poll Couping
Galv.	Galvanized	T.S.	Top of Steps
G.C.	Ground Cover	T.W.	Top of Wall
G.I.	Galvanized Iron	Twl.	Trowel
H.B.	Hose Bib	Typ.	Typical
Hdr. Brd.	Header Board	Vert.	Vertical
Horiz.	Horizontal	W/	With
H.P.	High Point	W/O	Without
Hgt.	Height	W.S.	Water Surface
I.D.	Inside Diameter		
Inv.	Invert		

SHEET INDEX:

T-1	TITLE SHEET
C-1	CONSTRUCTION PLAN
C-2	CONSTRUCTION PLAN
C-3	CONSTRUCTION DETAILS
I-1	IRRIGATION PLAN
I-2	IRRIGATION PLAN
I-3	IRRIGATION DETAILS
P-1	PLANTING PLAN
P-2	PLANTING PLAN
P-3	PLANTING DETAILS
S-1	CONSTRUCTION SPECIFICATIONS
S-2	PLANTING & IRRIGATION SPECIFICATIONS

VICINITY MAP:

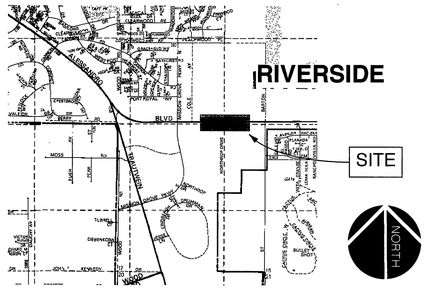

OWNER:

Regional Properties
1875 Century Park East
Suite 820
Century City, CA 90067
(310) 553-1776
Mr. Alex Lowy

CONSULTANTS:

ARCHITERRA DESIGN GROUP
LANDSCAPE ARCHITECTURE
SITE PLANNING
10630 Town Center Dr.
Suite 128
Rancho Cucamonga
CA 91730
(909) 484-2800
Fax (909) 484-2802
Richard Krumwiede
CA Lic. #2834 AZ Lic. # 29115
NV Lic. # 446 TX Lic. # 1884
City of Riverside BusinessTax Certificate ID 101246
Expiration Date 3/27/01

LICENSED LANDSCAPE ARCHITECT — Richard W. Krumwiede 2834 — 7/31/02 — 11/7/00 Date — STATE OF CALIFORNIA

THE LICENSED LANDSCAPE ARCHITECT SIGNING THESE PLANS IS RESPONSIBLE FOR ASSURING THE ACCURACY AND ACCEPTABILITY OF THE WORK HEREON. IN THE EVENT OF DISCREPANCIES ARISING DURING CONSTRUCTION, THE LICENSED LANDSCAPE ARCHITECT SHALL BE RESPONSIBLE FOR DETERMINING AN ACCEPTABLE SOLUTION AND REVISING THE PLANS FOR APPROVAL BY THE CITY.

CITY OF RIVERSIDE PUBLIC UTILITIES DEPARTMENT
ELECTRIC OVERHEAD AND UNDERGROUND
APPROVED FOR ELECTRICAL SERVICE TO IRRIGATION CONTROLLER AT LOCATION SHOWN — APPR. — 11/8/00 DATE

APPROVED BY WESTERN MUNICIPLE WATER DISTRICT FOR CONSTRUCTION
CIVIL ENGINEER/ DCE NO. 46212 — APPR. — DATE 11/8/00
VOID AFTER ONE YEAR FROM THIS DATE

PC-4298-M

MARK	REVISIONS	APPR.	DATE

DESIGNED BY J.R.G. DRAWN BY J.R.G. CHECKED BY J.A.F.

CITY OF RIVERSIDE
PUBLIC WORKS DEPARTMENT

	APPROVED BY	DATE	BY
PRINCIPAL ENGINEER		11/1/00	SC
PARK DEPARTMENT		11/08/00	RK
TRAFFIC DIVISION			
DEPUTY P. W. DIRECTOR		12/4/00	TMD

APPROVED BY Richard W. Scott — PUBLIC WORKS DIRECTOR
DATE 12-4-2000

TITLE SHEET
ALESSANDRO BLVD.
MEDIAN ISLANDS EAST &
WEST OF NORTHROP DR.

HORIZ. SCALE: 1"=20' — VERT. SCALE:

ACCOUNT NO. R-3527-L

T-1

SHEET 1 OF 12

DATE: 6/9/00

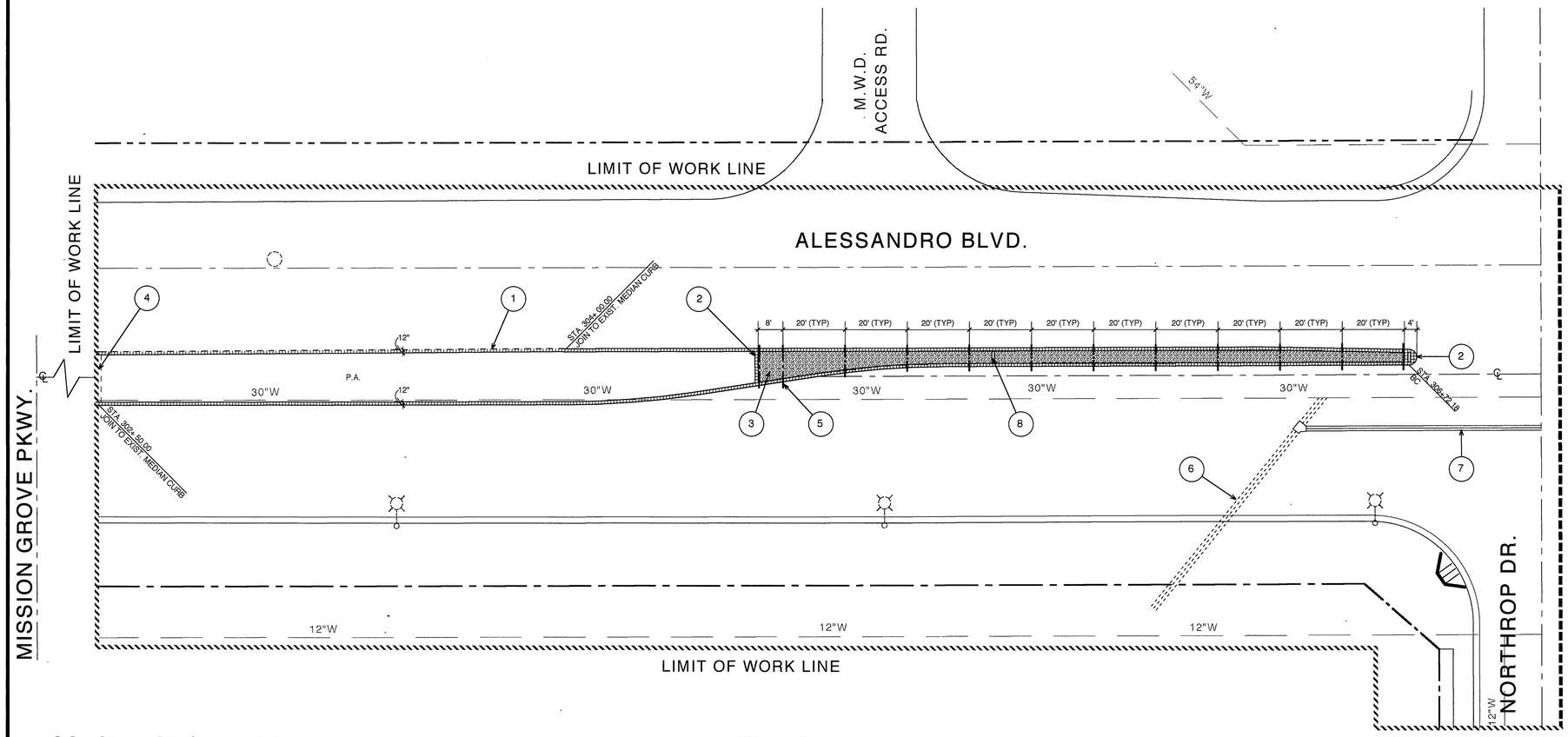

PUBLIC WORKS NOTES:

1. NO PERSON SHALL PERFORM ANY CONSTRUCTION ACTIVITY OR INSTALL ANY OBJECTS WITHIN THE PUBLIC RIGHT-OF-WAY OR EASEMENTS OF THE CITY OF RIVERSIDE WITHOUT A VALID CONSTRUCTION PERMIT OR, A STREET OPENING PERMIT OR AN ENCROACHMENT PERMIT ISSUED BY THE CITY'S PUBLIC WORKS DEPARTMENT.
2. IT SHALL BE THE RESPONSIBILITY OF THE CONTRACTOR TO CLEAR THE RIGHT OF WAY IN ACCORDANCE WITH THE PROVISIONS OF THE LAW AS IT AFFECTS EACH UTILITY INCLUDING IRRIGATION LINES AND APURTENANCES AND AT NO COST TO THE CITY.
3. CONSTRUCTION SHALL BE IN ACCORDANCE WITH THE CITY OF RIVERSIDE DEPARTMENT OF PUBLIC WORKS, STANDARD DRAWINGS, ITS SUPPLEMENTAL NOTES AND THE STANDARD SPECIFICATIONS FOR PUBLIC WORKS CONSTRUCTION, CURRENT EDITION.
4. THE LICENSED LANDSCAPE ARCHITECT SIGNING THESE PLANS IS RESPONSIBLE FOR ASSURING THE ACCURACY AND ACCEPTABILITY OF THE WORK HEREON. IN THE EVENT OF DISCREPANCIES ARISING DURING CONSTRUCTION, THE LICENSED LANDSCAPE ARCHITECT SHALL BE RESPONSIBLE FOR DETERMINING AN ACCEPTABLE SOLUTION AND REVISING THE PLANS FOR APPROVAL BY THE CITY.
5. QUANTITIES SHOWN ARE FOR INFORMATION ONLY AND THE CITY OF RIVERSIDE IS NOT RESPONSIBLE FOR THEIR ACCURACY.
6. THE DEVELOPER SHALL BE RESPONSIBLE FOR PRESERVING OR RE-ESTABLISHING AND REFERENCING SURVEY MONUMENTS DESTROYED, DISTURBED OR BURIED AS A RESULT OF CONSTRUCTION SHOWN HEREON.
7. THE CONTRACTOR SHALL CALL IN A LOCATION REQUEST TO UNDERGROUND SERVICE ALERT (USA), PHONE #1-800-227-2600 TWO WORKING DAYS BEFORE DIGGING. NO CONSTRUCTION PERMIT WILL BE ISSUED BY THE PUBLIC WORKS DEPARTMENT INVOLVING EXCAVATION FOR UNDERGROUND FACILITIES UNLESS THE APPLICANT HAS BEEN PROVIDED AN INQUIRY IDENTIFICATION NUMBER BY U.S.A.
8. THE CONTRACTOR SHALL COORDINATE TRENCHING FOR CABLE TELEVISION WITH OTHER TRENCHING WITHIN THE SUBDIVISION.
9. ANY TRAFFIC CONTROL STRIPING OBLITERATED AND/OR BADLY WORN DURING CONSTRUCTION SHALL BE RESTORED BY THE CONTRACTOR WITHIN FIVE DAYS AFTER NOTIFICATION FROM THE CITY INSPECTORS.
10. STREET IMPROVEMENT WORK THAT WILL CAUSE DAMAGE TO THE DETECTOR LOOPS SHALL NOT BE PERFORMED UNTIL TRAFFIC SIGNAL MAINTENANCE PERSONNEL HAVE BEEN NOTIFIED AND THE NECESSARY TIMING ADJUSTMENTS ARE MADE TO MAINTAIN SIGNAL OPERATION.
11. FINAL STRIPING FOR TRAFFIC CONTROL AND/OR PAVEMENT MARKING TO BE THE RESPONSIBILITY OF THE DEVELOPER.

WMWD REQUIREMENTS

WESTERN MUNICIPAL WATER DISTRICT INSPECTOR TO APPROVE LOCATION OF ALL LANDSCAPING AT TIME OF INSTALLATION WITHIN WMWD EASEMENT.

ANY DAMAGE CAUSED BY WMWD TO LANDSCAPE (MOW STRIPS, SPRINKLER SYSTEMS OR VEGETATION) DURING SYSTEM MAINTENANCE OR REPAIRS SHALL BE REPLACED BY OWNER AT OWNERS EXPENSE.

CONSTRUCTION NOTES

1. CONTRACTOR SHALL NOT WILLFULLY PROCEED WITH CONSTRUCTION AS DESIGNED WHEN IT IS OBVIOUS THAT UNKNOWN OBSTRUCTIONS AND/OR GRADE DIFFERENCES EXIST THAT MAY NOT HAVE BEEN KNOWN DURING DESIGN. SUCH CONDITIONS SHALL BE IMMEDIATELY BROUGHT TO THE ATTENTION OF THE LANDSCAPE ARCHITECT. THE CONTRACTOR SHALL ASSUME FULL RESPONSIBILITY FOR ALL NECESSARY REVISIONS DUE TO A FAILURE TO GIVE SUCH NOTIFICATION.
2. CONTRACTOR SHALL BE RESPONSIBLE FOR MAKING HIMSELF FAMILIAR WITH ALL UNDERGROUND UTILITIES, PIPES, AND STRUCTURES. CONTRACTOR SHALL TAKE SOLE RESPONSIBILITY FOR COST INCURRED DUE TO DAMAGE AND REPLACEMENT OF SAID UTILITIES.
3. CONTRACTOR SHALL BE RESPONSIBLE FOR ANY COORDINATION WITH OTHER SUB-CONTRACTORS AS REQUIRED TO ACCOMPLISH CONSTRUCTION OPERATIONS.
4. SEE GRADING PLANS FOR VERTICAL CONTROL.
5. CONTRACTOR SHALL COORDINATE IRRIGATION SLEEVE LOCATIONS UNDER PAVED AREAS AS REQUIRED. REFER TO IRRIGATION PLANS.
6. PRIOR TO PLACING CONCRETE, THE CONTRACTOR SHALL SUFFICIENTLY COMPACT THE SUBGRADE AND PROVIDE SUBSURFACE PREPARATION PER SPECIFICATIONS.
7. CONCRETE SURFACES SHALL BE FORMED WITH LONG, SMOOTH GRADIENTS TO REDUCE DIPS, ABRUPT CHANGES, AND SHARP TRANSITIONS.
8. ALL CURVILINEAR WALKS, CURBS, HEADERBOARDS, AND WALLS SHALL HAVE A CONTINUOUS SMOOTH CURVE WHERE APPLICABLE. ALL FORMS MUST BE INSPECTED AND APPROVED PRIOR TO BEGINNING THAT PHASE OF WORK.
9. IF IN THE FIELD, SCALED DIMENSIONS CONFLICT WITH STATED GRADES AND/OR ELEVATION, SEE DESIGN ELEVATION SHALL TAKE PRECEDENCE.

THE LICENSED LANDSCAPE ARCHITECT SIGNING THESE PLANS IS RESPONSIBLE FOR ASSURING THE ACCURACY AND ACCEPTABILITY OF THE WORK HEREON . IN THE EVENT OF DISCREPANCIES ARISING DURING CONSTRUCTION, THE LICENSED LANDSCAPE ARCHITECT SHALL BE RESPONSIBLE FOR DETERMINING AN ACCEPTABLE SOLUTION AND REVISING THE PLANS FOR APPROVAL BY THE CITY.

CONSTRUCTION LEGEND

1. EXISTING CONCRETE CURB. SEE CIVIL'S PLANS FOR ADDITIONAL INFORMATION.
2. ISLAND NOSES AND MEDIAN BANDS TO BE 4" THICK SLAB ON GRADE, 3,000 PSI DESIGN MIX. BOMANITE 12"x12" TILED PATTERN STAMPED CONCRETE, OR AN APPROVED EQUAL. INTEGRAL COLOR NO. C-22, CORAL RED CHROMIX ADMIXTURE BY L.M. SCOFIELD. TEXTURE- FINE BROOM FINISH, PERPENDICULAR TO STREET. SEE DETAILS D&E, SHEET C-3.
3. RAISED MEDIAN AREAS ALONG ALESSANDRO AVENUE TO BE 4" THICK SLAB ON GRADE, 3,000 PSI DESIGN MIX. ASHLAR SLATE BOMACRON PATTERN BY BOMANITE, OR AN APPROVED EQUAL. DUST-ON COLOR NO. A-51,STEADMAN BUFF LITHOCHROME COLOR HARDENER BY L.M. SCOFIELD. RELEASE COLOR NO. A-55, PECAN TAN BY L.M. SCOFIELD. TEXTURE- ASHLAR SLATE BOMACRON. SEE DETAIL B&D, SHEET C-3.
4. CONSTRUCT CONCRETE MOWCURB. PER DETAIL C, SHEET C-3.
5. 1/2" THICK FULL POLYFOAM EXPANSION JOINT. SEE DETAIL A, SHEET C-3.
6. EXISTING STORM DRAIN. SEE CIVIL'S PLANS FOR ADDITIONAL INFORMATION.
7. PROPOSED STORM DRAIN. SEE CIVIL'S PLANS FOR ADDITIONAL INFORMATION.
8. ROAD SIGNAGE (SEE CIVIL ENGINEER'S PLANS FOR ADDITIONAL INFO)

NOTE: ALL STATION POINTS WERE TAKEN FROM CANTY ENGINEERING STREET IMPROVEMENT PLANS, DATED: SEPT. 1999 PLAN NO. R-3527.

Underground Service Alert

Call: TOLL FREE

1-800 227-2600

TWO WORKING DAYS BEFORE YOU DIG

PLAN CROSS REFERENCES

FOR NOTES AND LEGENDS, SEE SHEET C-1
FOR DETAILS, SEE SHEET C-3
FOR SPECIFICATIONS, SEE SHEET S-1
FOR CORRESPONDING IRRIGATION PLAN SEE SHEET I-1
FOR CORRESPONDING PLANTING PLAN SEE SHEET P-1

SHEET KEY MAP

N.T.S.

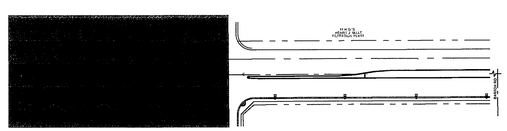

NORTH

SCALE: 1"=20'

PC-4298-M

MARK	REVISIONS	APPR.	DATE

DESIGNED BY J.R.G. DRAWN BY J.R.G. CHECKED BY J.A.F.

CITY OF RIVERSIDE
PUBLIC WORKS DEPARTMENT

APPROVED BY	DATE	BY
PRINCIPAL ENGINEER	11/7/00	SE
PARK DEPARTMENT	11/08/00	RG
TRAFFIC DIVISION		
DEPUTY P. W. DIRECTOR	12/6/00	TTB

APPROVED BY
Richard McGrath
PUBLIC WORKS DIRECTOR
DATE 12-8-2000

CONSTRUCTION PLAN
ALESSANDRO BLVD. MEDIAN ISLANDS EAST & WEST OF NORTHROP DR.

HORIZ. SCALE: 1"=20' VERT. SCALE:

ACCOUNT NO.
R-3527-L
C-1
SHEET 2 OF 12
DATE: 10/9/00

LICENSED LANDSCAPE ARCHITECT
Richard W. Krumwiede 2393
7-31-02
11/7/00
STATE OF CALIFORNIA

ARCHITERRA DESIGN GROUP
LANDSCAPE ARCHITECTURE
SITE PLANNING
10630 Town Center Dr., Suite 109
Rancho Cucamonga, CA 91730
(909) 484-8800
fax (909) 484-2802
Richard Krumwiede
CA Lic. #2624 AZ Lic. # 29115 NV Lic. # 446

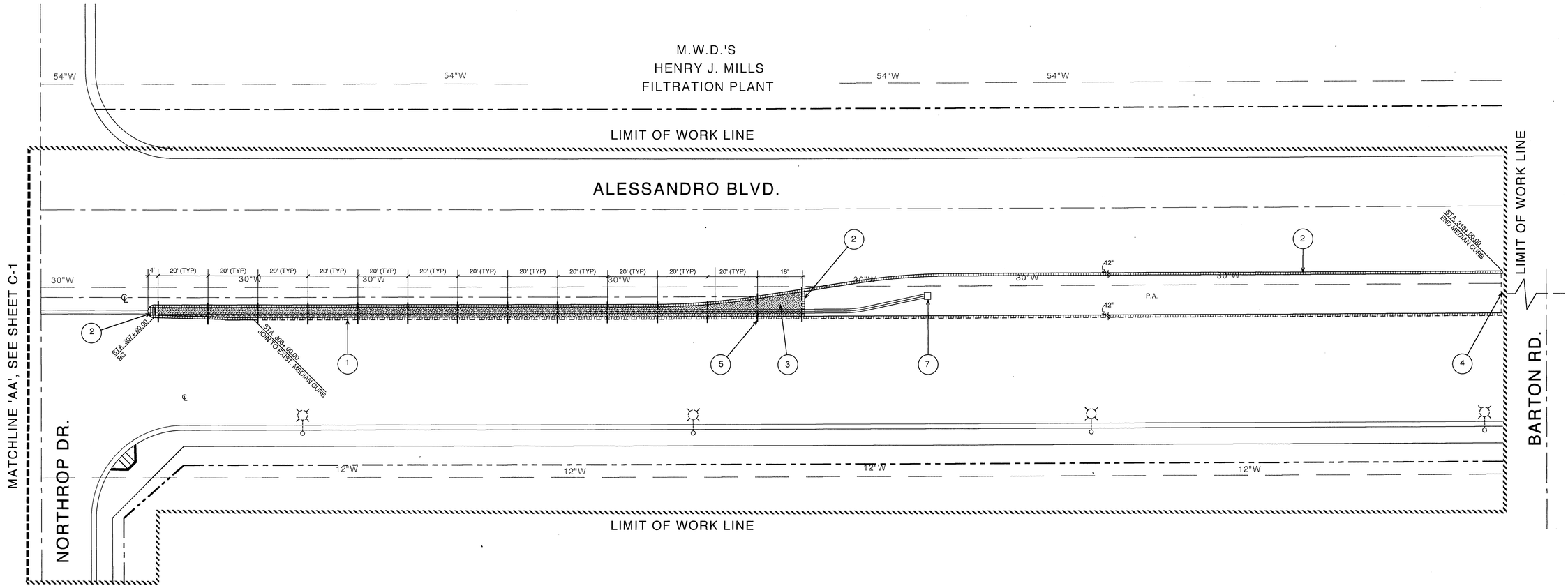

CONSTRUCTION LEGEND

1. EXISTING CONCRETE CURB. SEE CIVIL'S PLANS FOR ADDITIONAL INFORMATION.
2. ISLAND NOSES AND MEDIAN BANDS TO BE 4" THICK SLAB ON GRADE, 3,000 PSI DESIGN MIX. BOMANITE 12"x12" TILED PATTERN STAMPED CONCRETE, OR AN APPROVED EQUAL. INTEGRAL COLOR NO. C-22, CORAL RED CHROMIX ADMIXTURE BY L.M. SCOFIELD. TEXTURE- FINE BROOM FINISH, PERPENDICULAR TO STREET. SEE DETAILS D&E, SHEET C-3.
3. RAISED MEDIAN AREAS ALONG ALESSANDRO AVENUE TO BE 4" THICK SLAB ON GRADE, 3,000 PSI DESIGN MIX. ASHLAR SLATE BOMACRON PATTERN BY BOMANITE, OR AN APPROVED EQUAL. DUST-ON COLOR NO. A-51,STEADMAN BUFF LITHOCHROME COLOR HARDENER BY L.M. SCOFIELD. RELEASE COLOR NO. A-55, PECAN TAN BY L.M. SCOFIELD. TEXTURE- ASHLAR SLATE BOMACRON. SEE DETAIL B&D, SHEET C-3.
4. CONSTRUCT CONCRETE MOWCURB. PER DETAIL C, SHEET C-3.
5. 1/2" THICK FULL POLYFOAM EXPANSION JOINT. SEE DETAIL A, SHEET C-3.
6. EXISTING STORM DRAIN. SEE CIVIL'S PLANS FOR ADDITIONAL INFORMATION.
7. PROPOSED STORM DRAIN. SEE CIVIL'S PLANS FOR ADDITIONAL INFORMATION (R-3527 SHEET 2)
8. ROAD SIGNAGE (SEE CIVIL ENGINEER'S PLANS FOR ADDITIONAL INFO)

NOTE: ALL STATION POINTS WERE TAKEN FROM CANTY ENGINEERING STREET IMPROVEMENT PLANS, DATED: SEPT. 1999 PLAN NO. R-3527.

LICENSED LANDSCAPE ARCHITECT
Richard W. Krumwiede 2934
7/31/09
STATE OF CALIFORNIA

THE LICENSED LANDSCAPE ARCHITECT SIGNING THESE PLANS IS RESPONSIBLE FOR ASSURING THE ACCURACY AND ACCEPTABILITY OF THE WORK HEREON . IN THE EVENT OF DISCREPANCIES ARISING DURING CONSTRUCTION, THE LICENSED LANDSCAPE ARCHITECT SHALL BE RESPONSIBLE FOR DETERMINING AN ACCEPTABLE SOLUTION AND REVISING THE PLANS FOR APPROVAL BY THE CITY.

SHEET KEY MAP
N.T.S.

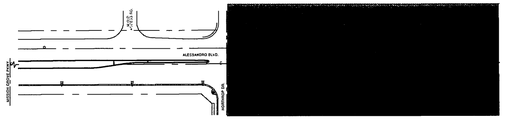

NORTH

SCALE: 1"=20'

ARCHITERRA DESIGN GROUP
LANDSCAPE ARCHITECTURE
SITE PLANNING
10530 Town Center Dr., Suite 120
Rancho Cucamonga, CA 91730
(909) 484-2800
fax (909) 484-2802
Richard Krumwiede
CA Lic. #2934 AZ Lic. # 29115 NV Lic. # 446

PC-4298-M

Underground Service Alert

Call: TOLL FREE

1-800
227-2600

TWO WORKING DAYS BEFORE YOU DIG

PLAN CROSS REFERENCES

FOR NOTES AND LEGENDS, SEE SHEET C-1
FOR DETAILS, SEE SHEET C-3
FOR SPECIFICATIONS, SEE SHEET S-1
FOR CORRESPONDING IRRIGATION PLAN SEE SHEET I-2
FOR CORRESPONDING PLANTING PLAN SEE SHEET P-2

MARK	REVISIONS	APPR.	DATE

DESIGNED BY J.R.G. DRAWN BY J.R.G. CHECKED BY J.A.F.

CITY OF RIVERSIDE
PUBLIC WORKS DEPARTMENT

	APPROVED BY	DATE	BY
PRINCIPAL ENGINEER		12/1/2000	
PARK DEPARTMENT		11/08/00	
TRAFFIC DIVISION			
DEPUTY P. W. DIRECTOR			

APPROVED BY
PUBLIC WORKS DIRECTOR
DATE 12-9-2000

CONSTRUCTION PLAN
ALESSANDRO BLVD. MEDIAN ISLANDS EAST & WEST OF NORTHROP DR.

HORIZ. SCALE: 1"=20' VERT. SCALE:

ACCOUNT NO.
R-3527-L
C-2
SHEET 3 OF 12
DATE: 10/9/00

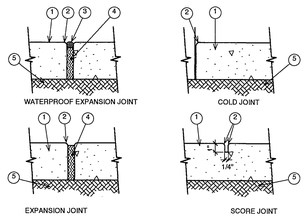

LEGEND:

1. CONCRETE PAVING.
2. 1/4" TOOLED RADIUS.
3. WATERPROOF SEALANT, COLOR TO MATCH PAVING. SUBMIT COLOR SAMPLES PRIOR TO INSTALLATION.
4. 1/2" POLY FOAM EXPANSION JOINT W/TEAR-AWAY TOP, SEE SPECS.
5. COMPACTED SUB-GRADE PER SOILS REPORT.

A CONCRETE JOINTS

SCALE: N.T.S.

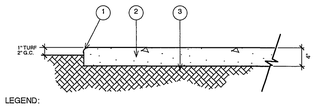

LEGEND:

1. 1/2" RADIUS AT ALL EDGES.
2. DUST-ON COLOR/INTEGRAL COLOR CONCRETE PAVING. SEE CONSTRUCTION PLAN FOR COLOR; SEE BELOW FOR FINISH TREATMENT.
3. COMPACT EARTH TO 90% RELATIVE COMPACTION UNDER PAVEMENT.

NOTE: CONTRACTOR SHALL POUR AND FINISH A 2'X2' SQUARE SAMPLE OF EACH TYPE OF FINISH FOR APPROVAL BY OWNER'S REPRESENTATIVE OR LAND. ARCH.

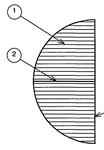

LEGEND:

1. FINE BROOM FINISH INTEGRAL COLOR CONCRETE, RUN PERPENDICULAR TO STREET.
2. DEEP SCORE JOINTS; SEE CONST. PLAN FOR LAYOUT.
3. EDGE OF PAVING.

A. FINE BROOM FINISH W/DEEP SCORE JOINTS

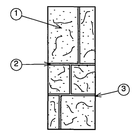

LEGEND:

1. ASHLAR SLATE FINISH DUST-ON COLOR CONCRETE. (2 APPLICATIONS) RELEASE DUST-ON COLOR. (1 APPLICATION)
2. SAWCUT SCORE LINES; SEE CONST. PLAN FOR LAYOUT.
3. EDGE OF PAVING.

B. ASHLAR SLATE FINISH W/SAWCUT SCORE LINES

B CONCRETE FINISH

SCALE: N.T.S.

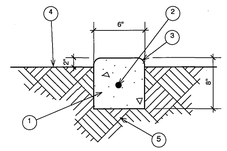

LEGEND:

1. POURED CONCRETE MOW STRIP WITH FINE BRUSH FINISH.
2. #3 REBAR CONTINUOUS SET @ MID-DEPTH.
3. 1/2" BULLNOSE (TYPICAL).
4. FINISH GRADE.
5. 90% COMPACTED SUB-GRADE.

NOTE:
INSTALL CONTROL JOINTS @ 8'-0" O.C. MAX. SPACING AND AT ALL END OF CURB RETURNS.

C CONCRETE MOWCURB

SCALE: N.T.S.

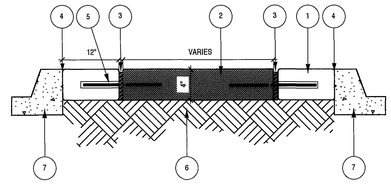

LEGEND:

1. BOMANITE CONCRETE BAND - SEE CONSTRUCTION PLAN & LEGEND FOR WIDTH, COLOR, AND FINISH. PROVIDE 1/2" RADIUS AT EDGES.
2. BOMACRON CONCRETE PAVING - SEE CONSTRUCTION PLAN & LEGEND FOR FINISH. PROVIDE 1/2" RADIUS EXPOSED EDGES.
3. 1/2" THICK FULL DEPTH POLYFOAM EXPANSION JOINT WITH THIOKOL BEAD AT TOP. SEE PLAN FOR LOCATIONS TO MATCH ASHLAR SLATE COLOR.
4. COLD JOINT WITH 1/2" RADIUS EACH WAY. SEE PLAN FOR LOCATIONS.
5. 12" LONG #4 REBAR DOWELS @ 36" O.C. . SET @ MID-DEPTH. INSTALL WITH SLIP SLEEVE ON ONE SIDE.
6. COMPACTED SUBGRADE PER SOILS ENGINEER'S REPORT.
7. EXISTING CONCRETE CURB FACE PER PROJECT ENGINEER'S PLANS.

D CONCRETE PAVING W/ REBAR

SCALE: N.T.S.

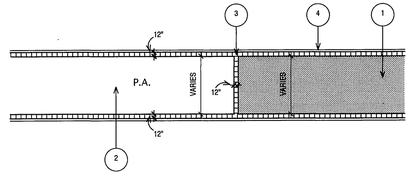

LEGEND:

1. BOMACRON CONCRETE PAVING - SEE CONSTRUCTION PLAN & LEGEND FOR FINISH.
2. PLANTER AREA.
3. 12"X12" BOMANITE CONCRETE BAND - SEE CONSTRUCTION PLAN & LEGEND FOR WIDTH, COLOR, AND FINISH.
4. EXISTING CONCRETE CURB.

E PLANTER BLOW-UP (TYP.)

SCALE: N.T.S.

F

SCALE: N.T.S.

G

SCALE: N.T.S.

H

SCALE: N.T.S.

I

SCALE: N.T.S.

J

SCALE: N.T.S.

Underground Service Alert

Call: TOLL FREE

1-800
227-2600

TWO WORKING DAYS BEFORE YOU DIG

THE LICENSED LANDSCAPE ARCHITECT SIGNING THESE PLANS IS RESPONSIBLE FOR ASSURING THE ACCURACY AND ACCEPTABILITY OF THE WORK HEREON. IN THE EVENT OF DISCREPANCIES ARISING DURING CONSTRUCTION, THE LICENSED LANDSCAPE ARCHITECT SHALL BE RESPONSIBLE FOR DETERMINING AN ACCEPTABLE SOLUTION AND REVISING THE PLANS FOR APPROVAL BY THE CITY.

LICENSED LANDSCAPE ARCHITECT — Richard W. Krumwiede 2934 — 7/31/03 — 11/7/00 — STATE OF CALIFORNIA

ARCHITERRA DESIGN GROUP
LANDSCAPE ARCHITECTURE
SITE PLANNING
10630 Town Center Dr., Suite 128
Rancho Cucamonga, CA 91730
(909) 484-9800
fax (909) 484-2602

Richard Krumwiede
CA Lic. #2934 AZ Lic. # 29115 NV Lic. # 446

MARK	REVISIONS	APPR.	DATE

DESIGNED BY J.R.G. DRAWN BY J.R.G. CHECKED BY J.A.F.

CITY OF RIVERSIDE
PUBLIC WORKS DEPARTMENT

	DATE	BY
APPROVED BY		
PRINCIPAL ENGINEER	11/7/00	RE
PARK DEPARTMENT	11/08/00	RD
TRAFFIC DIVISION		
DEPUTY P. W. DIRECTOR	11/16/00	RB

APPROVED BY
Richard M. Booth
PUBLIC WORKS DIRECTOR
DATE 12-4-2000

CONSTRUCTION DETAILS ALESSANDRO BLVD. MEDIAN ISLANDS EAST & WEST OF NORTHROP DR.

HORIZ. SCALE: N.T.S. VERT. SCALE: N.T.S.

PC-4298-M

ACCOUNT NO. R-3527-L

C-3

SHEET 4 OF 12

DATE: 10/9/00

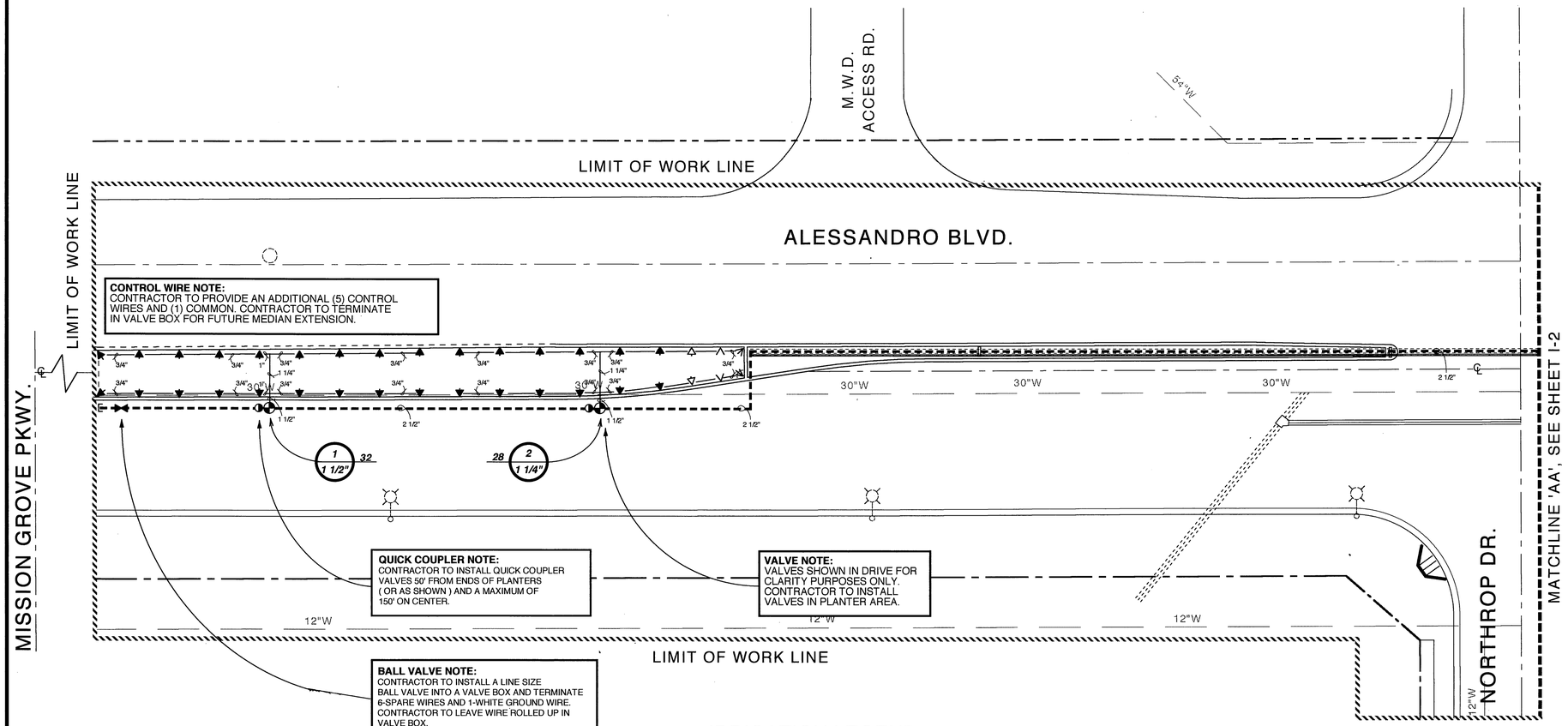

IRRIGATION NOTES

1. THIS SYSTEM IS DIAGRAMMATIC. ALL PIPE, VALVES, ETC. SHOWN WITHIN PAVED AREAS ARE FOR DESIGN CLARIFICATION ONLY AND SHALL BE INSTALLED IN PLANTING AREAS WHEREVER POSSIBLE.
2. DO NOT WILLFULLY INSTALL THE SPRINKLER SYSTEM AS INDICATED ON THE DRAWINGS WHEN IT IS OBVIOUS IN THE FIELD THAT UNKNOWN OBSTRUCTIONS OR GRADE DIFFERENCES EXIST AND SHOULD BE BROUGHT TO THE ATTENTION OF THE OWNER'S AUTHORIZED REPRESENTATIVE. IN THE EVENT THAT THIS NOTIFICATION IS NOT PERFORMED, THE CONTRACTOR MUST ASSUME FULL RESPONSIBILITY FOR REVISIONS NECESSARY.
3. SYSTEM DESIGN IS BASED ON MINIMUM OPERATING PRESSURE SHOWN AT EACH POINT OF CONNECTION WITH MAXIMUM GPM DEMAND SPECIFIED. IRRIGATION CONTRACTOR SHALL VERIFY ALL PRESSURES ON SITE PRIOR TO CONSTRUCTION AND REPORT ANY DISCREPANCIES TO THE OWNER'S CONSTRUCTION REPRESENTATIVE.
4. IT IS THE RESPONSIBILITY OF THE IRRIGATION CONTRACTOR TO FAMILIARIZE HIMSELF WITH ALL GRADE DIFFERENCES, LOCATION OF WALLS, RETAINING WALLS, CURBS, ETC. HE SHALL COORDINATE ALL HIS WORK WITH THE GENERAL CONTRACTOR AND OTHER SUB-CONTRACTORS FOR LOCATION OF PIPE SLEEVES THROUGH WALLS, UNDER ROADS, PAVING AND STRUCTURES.
5. MAINLINE FEEDER BETWEEN POINT OF CONNECTION, METER, AND BACKFLOW PREVENTER TO BE OF MATERIAL REQUIRED BY CURRENT WATER DISTRICT. (SEE WMWD STANDARD MATERIALS)
6. FINAL LOCATION OF THE AUTOMATIC CONTROLLER ENCLOSURE AND THE BACKFLOW PREVENTION DEVICE SHALL BE APPROVED BY THE CITY'S AND OWNER'S REPRESENTATIVE, AND/OR LANDSCAPE ARCHITECT, WHERE APPLICABLE.
7. IN ADDITION TO THE SLEEVES SHOWN ON THE PLAN, THE IRRIGATION CONTRACTOR SHALL BE RESPONSIBLE FOR THE INSTALLATION OF ADDITIONAL SLEEVES OF SUFFICIENT SIZE UNDER ALL PAVED AREAS PRIOR TO PAVING UPON APPROVAL OF THE OWNER'S REPRESENTATIVE, IF REQUIRED TO OPERATE SYSTEMS.
8. IRRIGATION CONTRACTOR SHALL FLUSH ALL LINES AND ADJUST ALL HEADS FOR MAXIMUM PERFORMANCE AND TO PREVENT OVERSPRAY ONTO WALKS, STREETS, AND BUILDINGS AS MUCH AS POSSIBLE. THIS SHALL INCLUDE SELECTING THE BEST NOZZLE RADIUS TO FIT UNUSUAL SITE CONDITIONS FOR APPROVAL PURPOSES AT NO EXTRA CHARGE. CALL LANDSCAPE ARCHITECT 48 HOURS IN ADVANCE FOR ANY COVERAGE TESTS.
9. QUALITY CONTROL OBSERVATION SEQUENCES ARE FOUND IN THE SPECIFICATIONS.
10. CLEAN-UP ON A DAILY BASIS PER OWNER'S REPRESENTATIVE'S APPROVAL.

IRRIGATION LEGEND

SYM	MANUFACTURER	MODEL NUMBER	DESCRIPTION	RADIUS	G.P.M.	P.S.I.
	RAINBIRD	1806-SAM-PRS-10Q	6" HIGH TURF POP-UP HEAD	10	0.40	30
	RAINBIRD	1806-SAM-PRS-10H	6" HIGH TURF POP-UP HEAD	10	0.80	30
	RAINBIRD	1806-SAM-PRS-10VAN	6" HIGH TURF POP-UP HEAD	10	0.80	30
	RAINBIRD	1806-SAM-PRS-12H	6" HIGH TURF POP-UP HEAD	12	1.30	30
	RAINBIRD	1806-SAM-PRS-15Q	6" HIGH TURF POP-UP HEAD	15	0.90	30
	RAINBIRD	1806-SAM-PRS-15H	6" HIGH TURF POP-UP HEAD	15	1.90	30

IRRIGATION EQUIPMENT

SYM	MANUFACTURER	MODEL NUMBER	DESCRIPTION
M			1 1/2" PROPOSED DOMESTIC WATER METER BY W.M.W.D. CONTRACTOR TO OBTAIN WATER METER AND ELECTRICAL SERVICES
	FEBCO	825Y-BV-2.00	2" REDUCED PRESSURE BACKFLOW DEVICE. CONTRACTOR TO INSTALL BACKFLOW INTO A STRONGBOX ENCLOSURE MODEL #SBBC-45-AL.
	WATTS	6800 SERIES	LINE SIZE BALL VALVE
FS	DATA INDUSTRIAL	FM-1.25B	1 1/4" FLOW SENSOR W/ MONITOR (SIZE AS SHOWN). INSTALL PER MANUF. RECOMMENDATIONS

IRRIGATION EQUIPMENT (cont.)

SYM	MANUFACTURER	MODEL NUMBER	DESCRIPTION
	RAINBIRD	EFB-CP SERIES	ELECTRIC REMOTE CONTROL VALVE, SIZE AS SHOWN
C	RAINBIRD	ESP-24-MC	24-STATION ELECTRIC WALL MT. CONTROLLER. CONTRACTOR TO MOUNT CONTROLLER IN A NON-METERED STRONGBOX ENCLOSURE MODEL NO. SB-18DSS W/ CONTROLLER SUBASSEMBLY (CSA-36).
	WILKINS	500 SERIES	2" PRESSURE REGULATOR
	RAINBIRD	44DLRC/44DK	QUICK COUPLING VALVE WITH (2-KEYS TOTAL)
	APPROVED	CL 200 PVC	NON-PRESSURIZED LATERAL LINE - 12" MIN. COVER - SIZES NOTED
	APPROVED	CL-315 FOR 2" & ABOVE SCH 40 FOR SIZES BELOW 2"	PRESSURIZED MAIN LINE - 18" MIN. COVER - SIZES NOTED STREET CROSSINGS- 24" MIN. COVER.
	APPROVED	SCH 40 PVC	PIPE SLEEVE - TWO TIMES DIAMETER OF PIPE TO BE INSERTED
	APPROVED	SCH 40 PVC	WIRE SLEEVE, SIZE AS SHOWN, 18" MIN. COVER

VALVE SIZING KEY

VALVE # — 1 — 10 — GPM
3/4" — VALVE SIZE

PLAN CROSS REFERENCES

FOR NOTES AND LEGENDS, SEE SHEET I-1
FOR DETAILS, SEE SHEET I-3
FOR SPECIFICATIONS, SEE SHEET S-2
FOR CORRESPONDING CONSTRUCTION PLAN SEE SHEET C-1
FOR CORRESPONDING PLANTING PLAN SEE SHEET P-1

THE LICENSED LANDSCAPE ARCHITECT SIGNING THESE PLANS IS RESPONSIBLE FOR ASSURING THE ACCURACY AND ACCEPTABILITY OF THE WORK HEREON . IN THE EVENT OF DISCREPANCIES ARISING DURING CONSTRUCTION, THE LICENSED LANDSCAPE ARCHITECT SHALL BE RESPONSIBLE FOR DETERMINING AN ACCEPTABLE SOLUTION AND REVISING THE PLANS FOR APPROVAL BY THE CITY.

Underground Service Alert

Call: TOLL FREE
1-800
227-2600
TWO WORKING DAYS BEFORE YOU DIG

NORTH
SCALE: 1"=20'

SHEET KEY MAP
N.T.S.

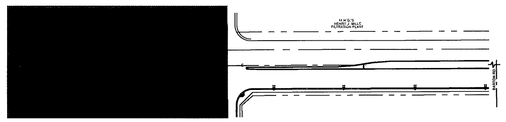

PC-4298-M

MARK	REVISIONS	APPR.	DATE

DESIGNED BY J.R.G. DRAWN BY J.R.G. CHECKED BY J.A.F.

CITY OF RIVERSIDE
PUBLIC WORKS DEPARTMENT

APPROVED BY	DATE	BY
PRINCIPAL ENGINEER	11/1/00	
PARK DEPARTMENT	11/08/00	
TRAFFIC DIVISION		
DEPUTY P. W. DIRECTOR	11/16/00	

APPROVED BY Richard M. Smith
PUBLIC WORKS DIRECTOR
DATE 12-4-2000

IRRIGATION PLAN ALESSANDRO BLVD. MEDIAN ISLANDS EAST & WEST OF NORTHROP DR.

HORIZ. SCALE: 1"=20' VERT. SCALE:

ACCOUNT NO. R-3527-L

I-1

SHEET 5 OF 12

DATE: 10/9/00

LICENSED LANDSCAPE ARCHITECT Richard M. Krumwiede 2394 7-31-02 RENEWAL DATE STATE OF CALIFORNIA

ARCHITERRA DESIGN GROUP
LANDSCAPE ARCHITECTURE
SITE PLANNING
10630 Town Center Dr., Suite 120
Rancho Cucamonga, CA 91730
(909) 484-0900
fax (909) 484-2802

Richard Krumwiede
CA Lic. #2394 AZ Lic. # 29115 NV Lic. # 446

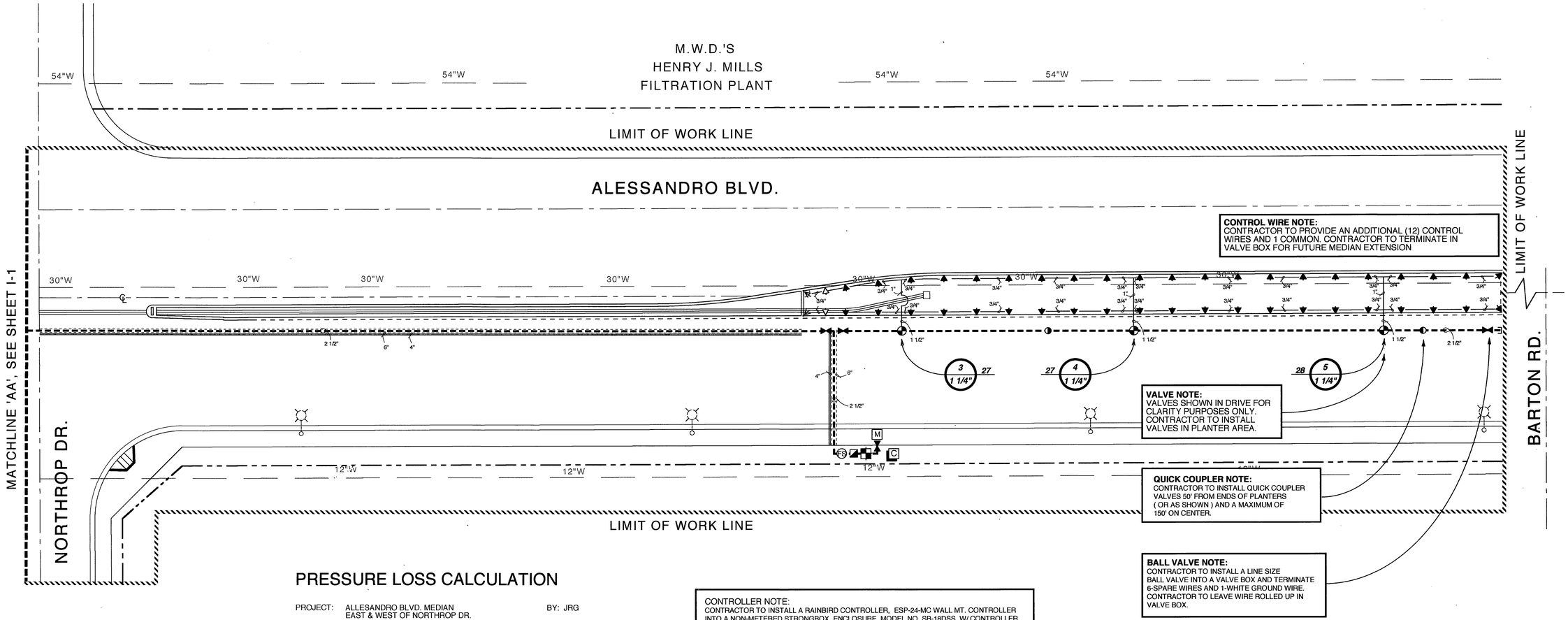

PRESSURE LOSS CALCULATION

PROJECT: ALLESANDRO BLVD. MEDIAN EAST & WEST OF NORTHROP DR. BY: JRG

STATIC PRESSURE HIGH: 90 PSI LOW: 81 PSI
SOURCE OF INFORMATION: SUSAN Y. (CALLED 5/17/00)
SUPPLIER: WESTERN MUNICIPLE WATER DISTRICT
PHONE NUMBER: (909) 780-3837
VALVE STATION/GPM: STATION: 1 32 GPM

ITEM:					P.S.I. LOSS:
WATER METER SIZE:	1 1/2"	@	32	GPM	2.10
BACKFLOW DEVICE	2"	@	32	GPM	12.00
FLOW SENSOR	1 1/4"	@	32	GPM	1.38
GATE VALVE(S):	1 2 1/2"	@	32	GPM	1.00
PRESSURE REGULATOR:	1 2"	@	32	GPM	3.00
MAINLINE (CL.315):	2 1/2" 814	L.F. @	32	GPM	3.17
AUTOMATIC VALVE SIZE:	1 1/2"	@	32	GPM	2.96
LATERAL LINE SIZE	3/4" 50	L.F. @	32	GPM	1.12
	1" 4	L.F. @	32	GPM	0.04
	1 1/4" 13	L.F. @	32	GPM	0.13
	1 1/2" 3	L.F. @	32	GPM	0.06
IRRIGATION HEAD PRESSURE:					30.00
SYSTEM LOSSES SUBTOTAL:					56.96
FITTING LOSSES (10% OF SUBTOTAL):					5.70
ELEVATION LOSSES/GAINS (ELEV.X.433) ±:					-3.03
TOTAL SYSTEM LOSSES:					59.63
AVAILABLE PRESSURE (LOW):					81.00
(-) DEFICIT OR (+) RESIDUAL PRESSURE:					21.37

NOTE: CONTRACTOR TO SET PRESSURE REGULATOR TO 75 P.S.I.
CONTRACTOR TO FIELD ADJUST AS NECESSARY.

CONTROLLER NOTE:
CONTRACTOR TO INSTALL A RAINBIRD CONTROLLER, ESP-24-MC WALL MT. CONTROLLER INTO A NON-METERED STRONGBOX ENCLOSURE, MODEL NO. SB-18DSS W/ CONTROLLER SUBASSEMBLIES. CONTRACTOR TO INSTALL AND WIRE CONTROLLER PER RAINBIRD RECOMMENDATIONS. CONTRACTOR TO COORDINATE POWER SERVICE WITH MR. JULIAN CARDENAS RIVERSIDE PUBLIC UTILITIES AT (909) 826-5937. FINAL LOCATION OF ENCLOSURE PER CITY OF RIVERSIDE REPRESENTATIVE. (NOTE: THIS UNIT IS TO BE A NON-METERED LANDSCAPE SERVICE).

POINT OF CONNECTION NOTE:
PROPOSED 1 1/2" DOMESTIC WATER METER FOR IRRIGATION BY W.M.W.D.. CONTRACTOR TO INSTALL A LINE SIZE ISOLATION VALVE, A REDUCED PRESSURE BACKFLOW DEVICE WITH VANDAL RESISTANT ENCLOSURE AND 2 1/2" PVC MAINLINE AS SHOWN. NOTE: CONTRACTOR TO PROVIDE AS-BUILT PLANS SHOWING METER NO._____, AND SERVICE ADDRESS:_____.

EXISTING STATIC PRESSURE	90 PSI
SYSTEM DESIGN PRESSURE:	60 PSI
MAXIMUM GPM DEMAND:	32 GPM

LICENSED LANDSCAPE ARCHITECT — W. Krumwiede 2834 — 7-31-02 Date — 11-22-00 Date — STATE OF CALIFORNIA

SHEET KEY MAP
N.T.S.

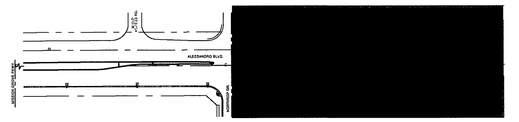

NORTH

SCALE: 1"=20'

ARCHITERRA DESIGN GROUP
LANDSCAPE ARCHITECTURE
SITE PLANNING
10630 Town Center Dr., Suite 120
Rancho Cucamonga, CA 91730
(909) 484-2800
fax (909) 484-2802
Richard Krumwiede
CA Lic. #2834 AZ Lic. # 29115 NV Lic. # 446

PC-4298-M

THE LICENSED LANDSCAPE ARCHITECT SIGNING THESE PLANS IS RESPONSIBLE FOR ASSURING THE ACCURACY AND ACCEPTABILITY OF THE WORK HEREON. IN THE EVENT OF DISCREPANCIES ARISING DURING CONSTRUCTION, THE LICENSED LANDSCAPE ARCHITECT SHALL BE RESPONSIBLE FOR DETERMINING AN ACCEPTABLE SOLUTION AND REVISING THE PLANS FOR APPROVAL BY THE CITY.

Underground Service Alert

Call: TOLL FREE
1-800
227-2600
TWO WORKING DAYS BEFORE YOU DIG

PLAN CROSS REFERENCES

FOR NOTES AND LEGENDS, SEE SHEET I-1
FOR DETAILS, SEE SHEET I-3
FOR SPECIFICATIONS, SEE SHEET S-2
FOR CORRESPONDING CONSTRUCTION PLAN SEE SHEET C-2
FOR CORRESPONDING PLANTING PLAN SEE SHEET P-2

MARK	REVISIONS	APPR.	DATE

DESIGNED BY J.R.G. DRAWN BY J.R.G. CHECKED BY J.A.F.

CITY OF RIVERSIDE
PUBLIC WORKS DEPARTMENT

APPROVED BY	DATE	BY
PRINCIPAL ENGINEER	11/22/00	
PARK DEPARTMENT	11/09/00	
TRAFFIC DIVISION		
DEPUTY P. W. DIRECTOR		

APPROVED BY
PUBLIC WORKS DIRECTOR
DATE 12-4-2000

IRRIGATION PLAN ALESSANDRO BLVD. MEDIAN ISLANDS EAST & WEST OF NORTHROP DR.

HORIZ. SCALE: 1"=20' VERT. SCALE:

ACCOUNT NO.
R-3527-L
I-2
SHEET 6 OF 12
DATE: 10/9/00

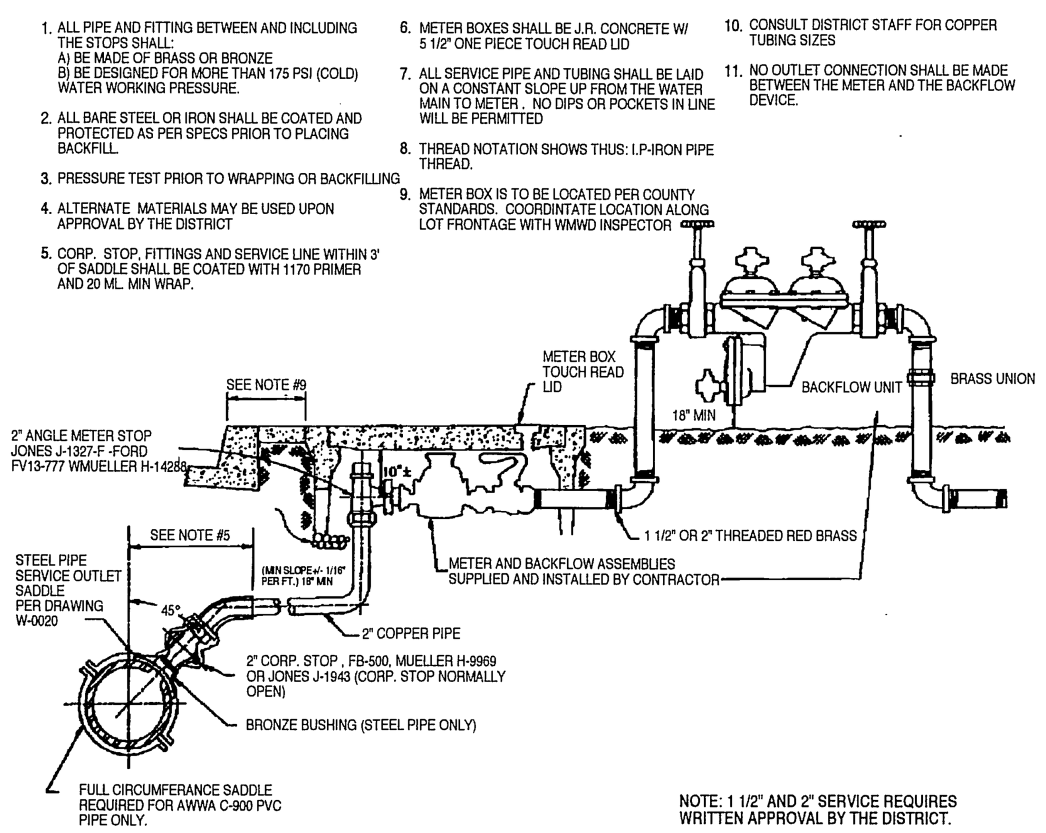

A DOMESTIC WATER SERVICE

SCALE: N.T.S.

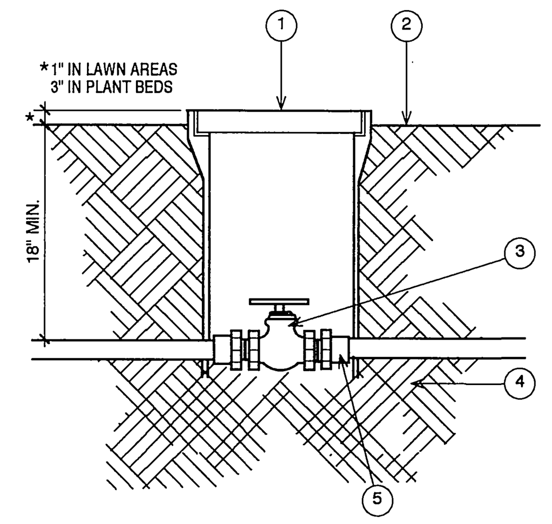

LEGEND:

1. ROUND VALVE BOX & COVER MARKED "BALL VALVE".
2. FINISH GRADE.
3. BALL VALVE - SEE IRRIGATION LEGEND FOR MODEL#.
4. NATIVE SOIL.
5. SCH. 40 PVC MALE ADAPTORS.

B ISOLATION VALVE

SCALE: N.T.S.

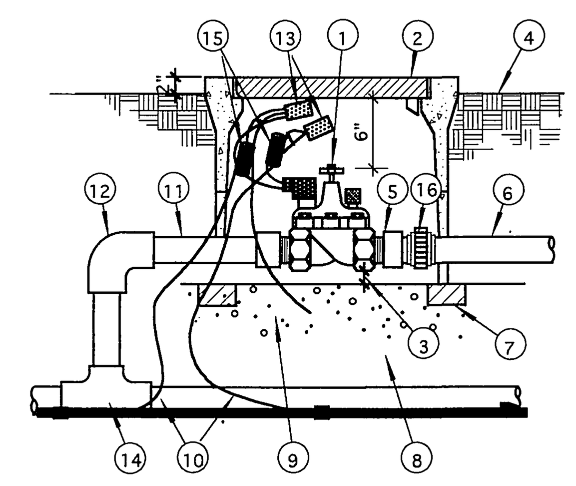

NOTE:
USE TEFLON TAPE OR TEFLON PIPE DOPE ON ALL PVC TO PVC OR METAL TO PVC MALE PIPE THREADS.

LEGEND:

1. ELECTRIC CONTROL VALVE.
2. RECTANGULAR VALVE BOX W/GREEN BOLT-DOWN COVER. HEAT BRAND VALVE STATION NO. ON LID IN 2" HIGH CHARACTERS.
3. 2" CLEAR SPACE.
4. FINISH GRADE.
5. PVC MALE ADAPTER (TYP.)
6. PVC PIPE TO SPRINKLERS - ANGLE PIPE TO SPECIFIED DEPTH WITH 45 DEG. ELLS.
7. COMMON BRICK (4 REQUIRED).
8. COMMON WIRE TO OTHER VALVES ON SAME CONTROLLER.
9. NATIVE SOIL BACKFILL.
10. CONTROL/COMMON WIRES FROM CONTROLLER.
11. PVC SCHEDULE 40 PIPE (TYP.)
12. PVC SXS 90 DEG. ELL
13. WIRE CONNECTOR.
14. MAINLINE FITTING W/SOLVENT-WELD OUTLET.
15. COIL WIRES PER SPECIFICATIONS.
16. SCH. 80 UNION

C REMOTE CONTROL VALVE

SCALE: N.T.S.

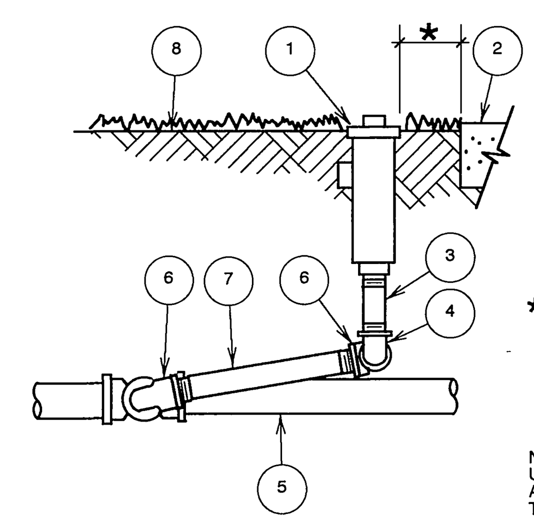

LEGEND:

1. POP-UP SPRAY HEAD.
2. WALK OR CURB.
3. PVC SCH. 80 NIPPLE - 4" MIN. LENGTH.
4. PVC TXT 90 DEG. ELL.
5. LATERAL LINE PIPE AND FITTING.
6. MARLEX 90 DEG. STREET ELL.
7. PVC SCH. 80 NIPPLE - 6" LONG.
8. FINISH GRADE.

* 1" IN TURF AREAS.
3" IN PLANTING BEDS.

NOTE:
USE TEFLON TAPE OR TEFLON PIPE DOPE ON ALL PVC TO PVC OR METAL TO PVC MALE PIPE THREADS.

D 6" POP-UP (TURF HEAD)

SCALE: N.T.S.

E

SCALE: N.T.S.

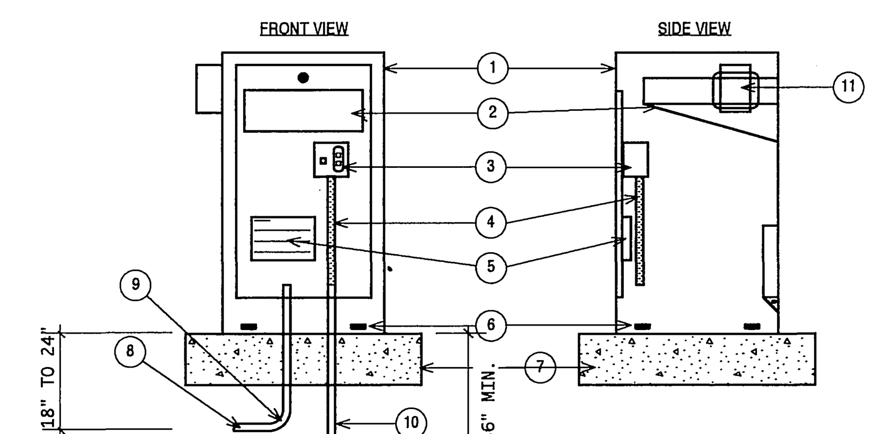

LEGEND:

1. STRONGBOX NON-METERED STAINLESS STEEL ENCLOSURE.
2. IRRIGATION CONTROLLER PER PLAN.
3. NEMA-3 GFI PLUG/SWITCH BOX WITH STAINLESS STEEL COVER PLATE.
4. FLUID-TIGHT CONDUIT INSIDE ENCLOSURE.
5. REMOTE MOUNTED TERMINAL BOARD WITH NUMBERED TERMINALS FOR ALL VALVES.
6. ANCHOR BOLTS.
7. 20" W. X 17" D. X 4" H. CONCRETE BASE.
8. WIRES TO REMOTE CONTROL VALVES.
9. 2" PVC SCH. 40 CONDUIT, FITTINGS AND SWEEP ELL.
10. 2" PVC SCH. 40 CONDUIT, FITTINGS AND SWEEP ELL TO POWER SUPPLY PER UTILITY SERVICE.
11. RAIN GUARD IN VANDAL RESISTANT ENCLOSURE.

I PEDESTAL/CONTROLLER

SCALE: N.T.S.

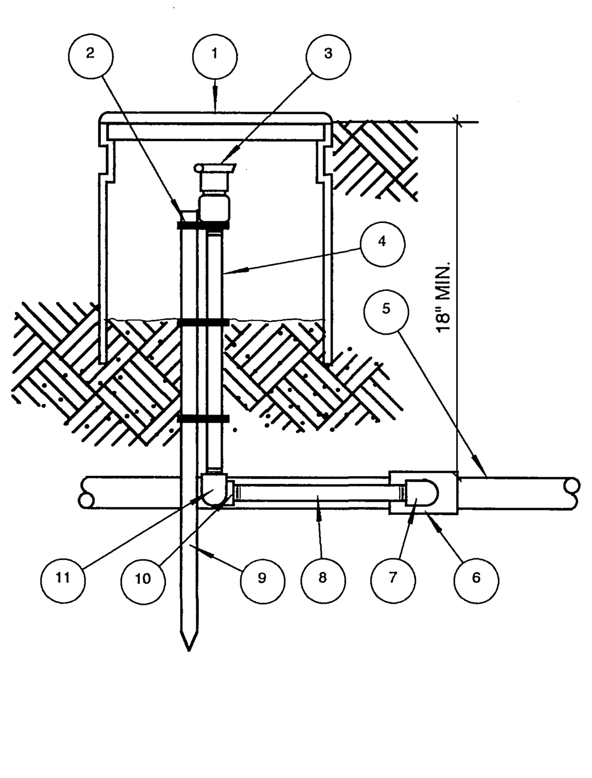

LEGEND:

1. VALVE BOX
2. 1/2" STAINLESS STEEL HOSE CLAMP. 3 REQUIRED.
3. QUICK COUPLING VALVE. TOP OF VALVE SHALL BE 2" BELOW VALVE BOX COVER.
4. SCH.80 PVC NIPPLE, LENGTH AS REQUIRED.
5. PRESSURE SUPPLY LINE.
6. PRESSURE LINE FITTING.
7. SCH.40 PVC 90 DEGREE STREET ELL.
8. SCH. 80 PVC NIPPLE, LENGTH AS REQUIRED.
9. #5 REBAR STAKE 36" LONG.
10. SCH. 80 PVC 90 DEGREE STREET ELL.
11. SCH. 80 PVC 90 DEGREE ELL.

F QUICK COUPLER

SCALE: N.T.S.

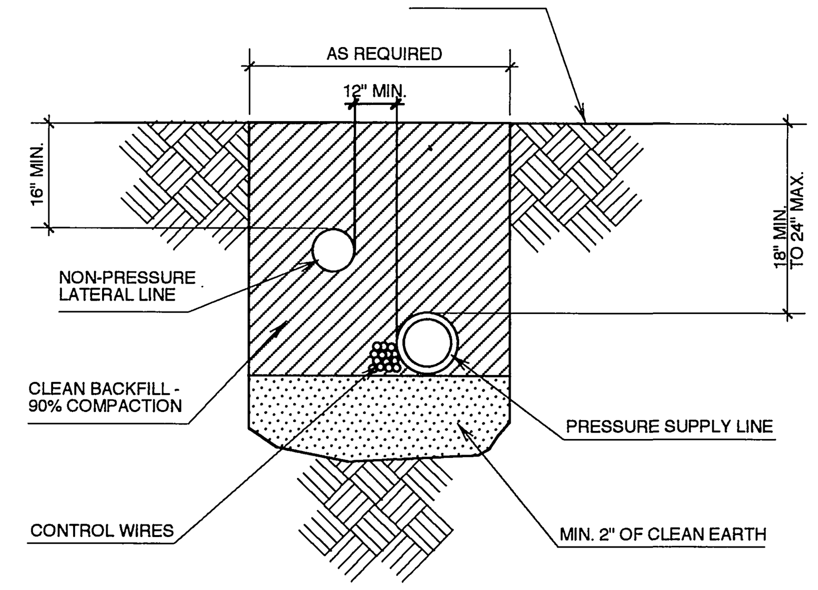

NOTES:

1. BELOW PAVED AREAS A MINIMUM OF 6" LAYER OF CLEEAN FILL SAND SHALL BE INSTALLED ABOVE AND BELOW PIPING.
2. PROVIDE MINIMUM COVER OF 24" ON PRESSURE SUPPLY LINES 3" AND LARGER.
3. WHEN USING RECLAIMED WATER, MAINTAIN MINIMUM 10' HORIZONTAL SEPARATION BETWEEN POTABLE AND RECLAIMED PRESSURE LINES. WHERE LINES CROSS, PROVIDE PVC SLEEVE FOR POTABLE LINE MINIMUM 5' EACH SIDE OF RECLAIMED WATER LINE.
4. BUNDLE WIRES WITH TAPE EVERY 10'.

G TRENCHING

SCALE: N.T.S.

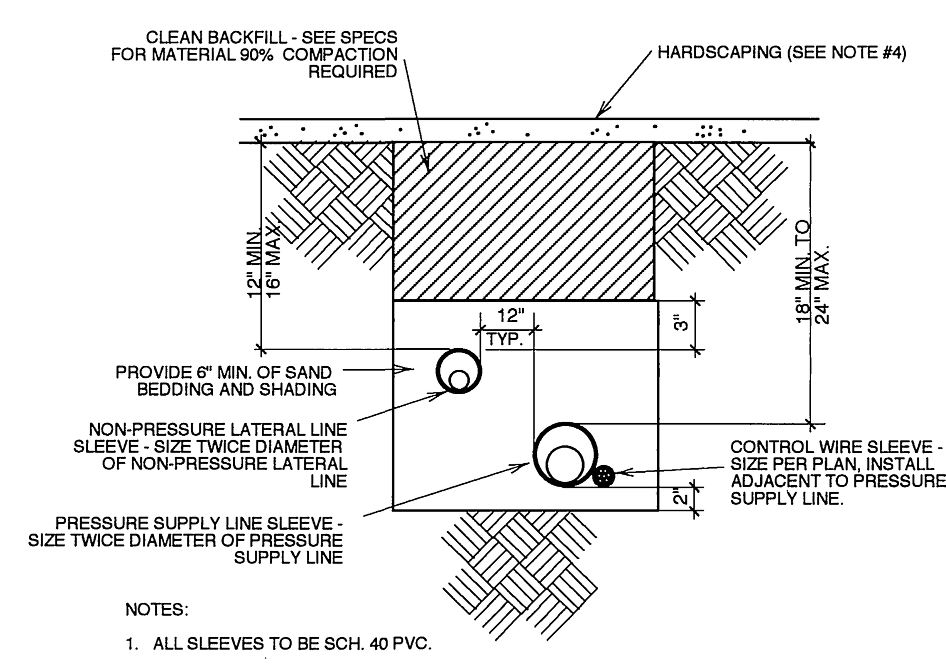

NOTES:

1. ALL SLEEVES TO BE SCH. 40 PVC.
2. EXTEND ALL SLEEVES 12" BEYOND EDGE OF HARDSCAPING AT BOTH ENDS.
3. ROUTE SLEEVING AROUND HANDICAP RAMPS.
4. PIPING UNDER PAVEMENT SUSCEPTIBLE TO TRAFFIC LOADS REFER TO CITY STD. (24" MIN. TO 36" MAX. DEPTH TO TOP OF PIPE BELOW STRUCTURAL SECTION).

H SLEEVING

SCALE: N.T.S.

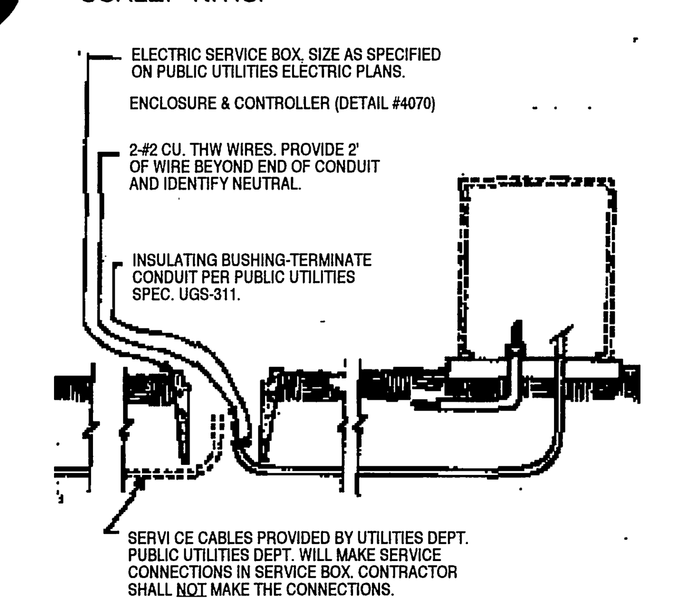

K NON METERED U.G ELECTRIC SERVICE

SCALE: N.T.S.

1800 PCS SCREEN PERFORMANCE
STANDARD & SMALL RADIUS SPRAY PATTERNS AND UMBRELLA BUBBLERS

MODEL GPM COLOR	PCS-010 0.1 PURPLE	PCS-020 0.2 BROWN	PCS-030 0.3 SILVER	PCS-040 0.3 ORANGE	PCS-060 0.6 BLACK	PCS-090 0.9 WHITE	PCS-125 1.25 GREEN	PCS-175 1.75 YELLOW	PCS-260 2.6 BLUE	PCS-370 3.7 RED
8F	-	-	1'		3'	5'	8'#			
8H	-	2'	4'	1'	7'	8'#				
8T	-	3'	5'	5'	9'#					
8Q	2'	5'	7'	7'						
10F	-	-	-	8'	5'	8'	10'			
10H	-	2'	6'	2'	10'	11'#		11'#		
10T	-	2'	6'	7'	10'#					
10Q	2'	5'	8'	7'						
12F	-	-	-	10'#	5'	7'	8'		12'#	
12TQ	-	-	2'	3'	5'	7'	10'	10'		
12TT	-	-	2'	3'	5'	9'	11'	12'#		
12H	-	-	4'	3'	8'	10'	12'#	12'#		
12T	-	2'	6'	4'	10'	12'#				
12Q	-	[illegible]	8'	8' 10'	12'#					
15F	-	-	-		-	5'	7'		11'	13'#
15TQ	-	-	-	-	-	6'	8'	8'	15'#	
15TT	-	-	1'	-	5'	6'	8'	12'	15'#	
15H	-	-	1'	4'	5'	8'	12'	12'		
15T	-	-	3'	4'	8'	12'	15'#	15'#		
15Q	-	2'	5'	6'	12'	15'#				
15SQ	-	-	-	7'	-	12X12'	14X14'		20X20'	23X23'
17SST	-	-	-	-	-	0X18'	0X10'	16X16'	9X30'	
15CST	-	-	-	-	4X22'	4X29'	4X39'	9X24'		
15SST	-	-	-	4X12'	4X24'	4X27'	4X3-'	4X40'		
15EST	-	-	4X14'	4X16' 4X18'	4X20'					
5F	-	3"	4"		1'	2'	3'			
5H-B	-	5"	10"	6"	2'					
5Q-B	5"	10"	3'	1'						
5CST-B	7"	14"	3'	5'						
16F-SLA	-	-	6"	5'	1'	4'	6'		14'	16'#
16H-SLA	-	6"	1'	7"	5'	10'	13'	10'		
16Q-SLA	6"	2'	5'	3'	12'	16'#		16'#		
22F-SS	-	-	-	8'	1'	4'	6'		17'	21'#
22H-SS	-	4"	1'	3"	5'	12'	18'	12'		
22Q-SS	6"	2'	6'	3"'	15'	20'#		22'#		

#RECOMMENDED NOZZLE/SCREEN COMBINATION TO ACHIEVE CATALOG PERFORMANCE AT 30 PSI.

NOTE: SCREENS WERE TESTED AT 50PSI FOR 10 MINUTES PRIOR TO TAKING DISTANCE MEASUREMENTS. DISTANCES MAY VARY SLIGHTLY WITH HIGHER PRESSURES AND LONGER RUN TIMES.

J PCS SCREEN CHART

SCALE: N.T.S.

Underground Service Alert

Call: TOLL FREE

1-800
227-2600

TWO WORKING DAYS BEFORE YOU DIG

THE LICENSED LANDSCAPE ARCHITECT SIGNING THESE PLANS IS RESPONSIBLE FOR ASSURING THE ACCURACY AND ACCEPTABILITY OF THE WORK HEREON. IN THE EVENT OF DISCREPANCIES ARISING DURING CONSTRUCTION, THE LICENSED LANDSCAPE ARCHITECT SHALL BE RESPONSIBLE FOR DETERMINING AN ACCEPTABLE SOLUTION AND REVISING THE PLANS FOR APPROVAL BY THE CITY.

ARCHITERRA DESIGN GROUP
LANDSCAPE ARCHITECTURE
SITE PLANNING
10630 Town Center Dr., Suite 128
Rancho Cucamonga, CA 91730
(909) 484-2800
fax (909) 484-2802

Richard Krumwiede
CA Lic. #2834 AZ Lic. # 29115 NV Lic. # 446

PC-4298-M

MARK	REVISIONS	APPR.	DATE

DESIGNED BY J.R.G. DRAWN BY J.R.G. CHECKED BY J.A.F.

CITY OF RIVERSIDE
PUBLIC WORKS DEPARTMENT

APPROVED BY	DATE	BY
PRINCIPAL ENGINEER	12/1/2000	
PARK DEPARTMENT	11/03/00	
TRAFFIC DIVISION		
DEPUTY P. W. DIRECTOR		

APPROVED BY Richard McGrath
PUBLIC WORKS DIRECTOR
DATE 12-4-2000

IRRIGATION DETAILS ALESSANDRO BLVD. MEDIAN ISLANDS EAST & WEST OF NORTHROP DR.

HORIZ. SCALE: N.T.S. VERT. SCALE: N.T.S.

ACCOUNT NO. R-3527-L

I-3

SHEET 7 OF 12

DATE: 10/9/00

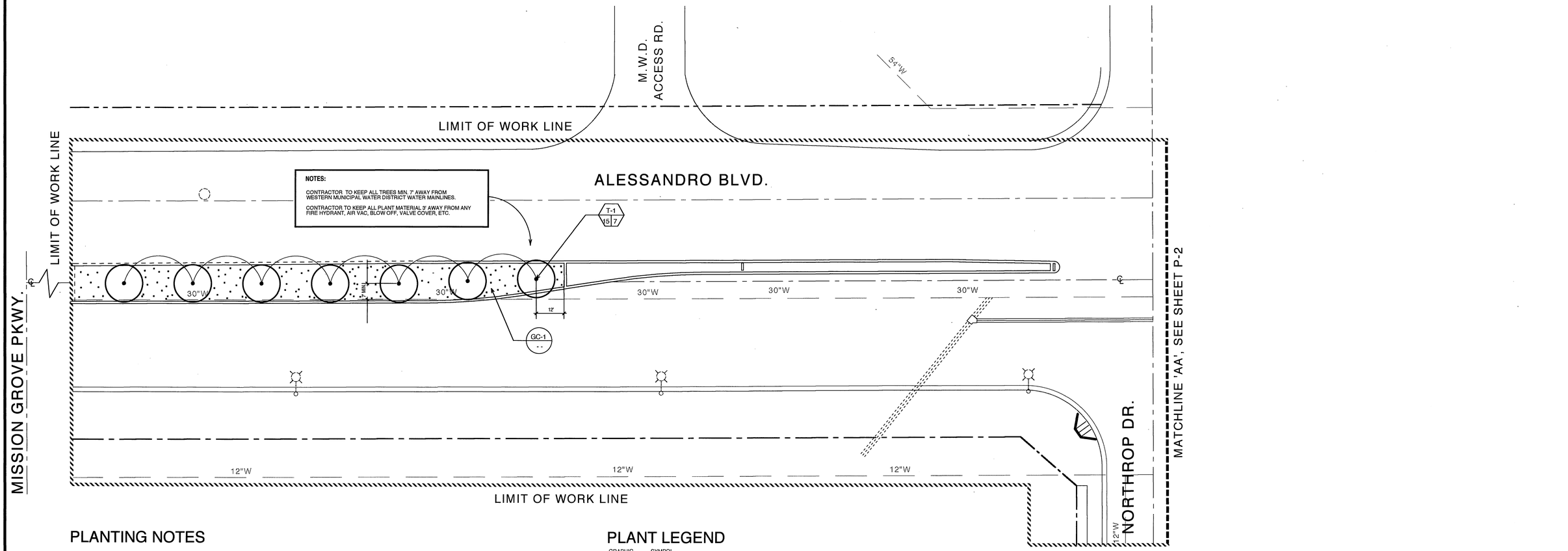

PLANTING NOTES

1. CONTRACTORS SHALL NOTIFY THE LANDSCAPE ARCHITECT OF SITE CONDITIONS WHICH PREVENT INSTALLATION PER PLANS AND SPECIFICATIONS.
2. CONTRACTOR SHALL BE LIABLE FOR REMOVING AND RE-INSTALLING IRRIGATION EQUIPMENT, AND REPLANTING AREAS WHICH ARE NOT INSTALLED PER PLAN AND SPECIFICATIONS.
3. REFER TO PLANTING SPECIFICATIONS FOR INSPECTION/CERTIFICATION SCHEDULE.
4. IRRIGATION SYSTEM SHALL BE INSTALLED PRIOR TO PLANT MATERIALS.
5. TREES AND SHRUBS SHALL BE PLANTED AFTER CONCRETE PLACEMENT, BUT NOT BEFORE IRRIGATION COVERAGE TEST NO. 1 HAS BEEN APPROVED. (SEE SPECIFICATIONS).
6. PLACE TREES BETWEEN IRRIGATION HEADS WHEREVER POSSIBLE.
7. LANDSCAPE CONTRACTOR SHALL TAKE FOUR (4) SOIL SAMPLES FROM THE SITE AT LOCATIONS APPROVED BY THE LANDSCAPE ARCHITECT. THE SAMPLES SHALL BE TAKEN AT A DEPTH OF 12' AFTER ROUGH GRADING AND SUBMITTED TO AN APPROVED SOIL AND PLANT LABORATORY FOR AGRICULTURAL SUITABILITY TESTING. THE COST OF TESTING SHALL BE INCLUDED IN THE CONTRACTOR'S BID.
8. THE RECOMMENDATIONS OF THE SOIL REPORT SHALL SUPERSEDE THE SOIL PREPARATION AND BACKFILL MIX SPECIFICATIONS (SEE SPECIFICATIONS). THE CONTRACTOR SHALL SUBMIT A COPY OF ALL SOILS REPORTS TO THE LANDSCAPE ARCHITECT PRIOR TO MODIFICATION OF THESE SPECIFICATIONS.
9. SHREDDED MULCH INSTALLATION: INSTALL SHREDDED MULCH IN ALL SHRUB AND GROUNDCOVER AREAS PER SPECIFICATIONS UNLESS OTHERWISE INDICATED ON PLANS.
10. CONTRACTOR IS RESPONSIBLE FOR ALL REPAIRS AND/OR REPLACEMENT OF ANY DAMAGED LANDSCAPE AREAS BEYOND THE LIMIT OF WORK. THAT IS A DIRECT RESULT OF THE LANDSCAPE CONSTRUCTION AND/OR HIS SUB-CONTRACTOR. REPLACEMENT ITEMS SHALL BE EXACT DUPLICATION OF ORIGINAL WORK OR PLANTS, UNLESS OTHERWISE APPROVED BY THE LANDSCAPE ARCHITECT.
11. WHEREVER GROUNDCOVER AREAS ARE ADJACENT TO TURF INSTALL CONCRETE MOWSTRIP OR HEADERBOARD AS INDICATED ON DRAWINGS.
12. CLEAN-UP SHALL TAKE PLACE ON A DAILY BASIS UNLESS OTHERWISE APPROVED BY THE OWNER'S REPRESENTATIVE.

THE LICENSED LANDSCAPE ARCHITECT SIGNING THESE PLANS IS RESPONSIBLE FOR ASSURING THE ACCURACY AND ACCEPTABILITY OF THE WORK HEREON . IN THE EVENT OF DISCREPANCIES ARISING DURING CONSTRUCTION, THE LICENSED LANDSCAPE ARCHITECT SHALL BE RESPONSIBLE FOR DETERMINING AN ACCEPTABLE SOLUTION AND REVISING THE PLANS FOR APPROVAL BY THE CITY.

Underground Service Alert

Call: TOLL FREE

1-800
227-2600

TWO WORKING DAYS BEFORE YOU DIG

PLANT LEGEND

GRAPHIC SYMBOL	SYMBOL CALL-OUT	BOTANIC NAME	COMMON NAME	SIZE	SPACING	COMMENTS
TREES						
	T-1	Lagerstroemia indica	Crape Myrtle	15 gallon	30' o.c.	Standard (Red Flowers)
GROUND COVERS						
	GC-1	Hydroseeded Turf	"Marathon" TM Seed			Available from: Southland Sod (1-800-632-3400)

NOTES:

1. Contractor is responsible for any damage caused by his work. Contractor is also responsible for repairing any irrigation lines/ sprinkler heads, and existing landscape areas that are damaged during construction.

SYMBOL LEGEND

TREES

CALL-OUT SYMBOL
SIZE (gal./box)
QUANTITY

SHRUBS / GROUND COVERS

CALL-OUT SYMBOL
QUANTITY

PLAN CROSS REFERENCES

FOR NOTES AND LEGENDS, SEE SHEET P-1
FOR DETAILS, SEE SHEET P-3
FOR SPECIFICATIONS, SEE SHEET S-2
FOR CORRESPONDING CONSTRUCTION PLAN SEE SHEET C-1
FOR CORRESPONDING IRRIGATION PLAN SEE SHEET I-1

NORTH

SCALE: 1"=20'

SHEET KEY MAP

N.T.S.

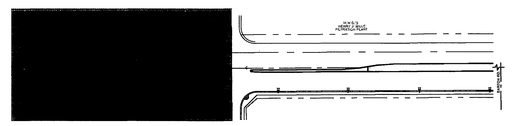

LICENSED LANDSCAPE ARCHITECT
Ricardo W. Krumwiede 2834
7-21-02
Date
STATE OF CALIFORNIA

ARCHITERRA DESIGN GROUP
LANDSCAPE ARCHITECTURE
SITE PLANNING
10630 Town Center Dr., Suite 120
Rancho Cucamonga, CA 91730
(909) 484-2800
fax (909) 484-2802
Richard Krumwiede
CA Lic. #2834 AZ Lic. # 29115 NV Lic. # 446

PC-4298-M

MARK	REVISIONS	APPR.	DATE

DESIGNED BY J.R.G. DRAWN BY J.R.G. CHECKED BY J.A.F.

CITY OF RIVERSIDE
PUBLIC WORKS DEPARTMENT

	DATE	BY
APPROVED BY		
PRINCIPAL ENGINEER	11/16/00	RE
PARK DEPARTMENT	11/03/00	PMD
TRAFFIC DIVISION		
DEPUTY P. W. DIRECTOR	11/14/00	TRB

APPROVED BY Richard McGrath
PUBLIC WORKS DIRECTOR
DATE 12-4-2000

PLANTING PLAN ALESSANDRO BLVD. MEDIAN ISLANDS EAST & WEST OF NORTHROP DR.

HORIZ. SCALE: 1"=20' VERT. SCALE:

ACCOUNT NO.
R-3527-L
P-1
SHEET 8 OF 12
DATE: 10/9/00

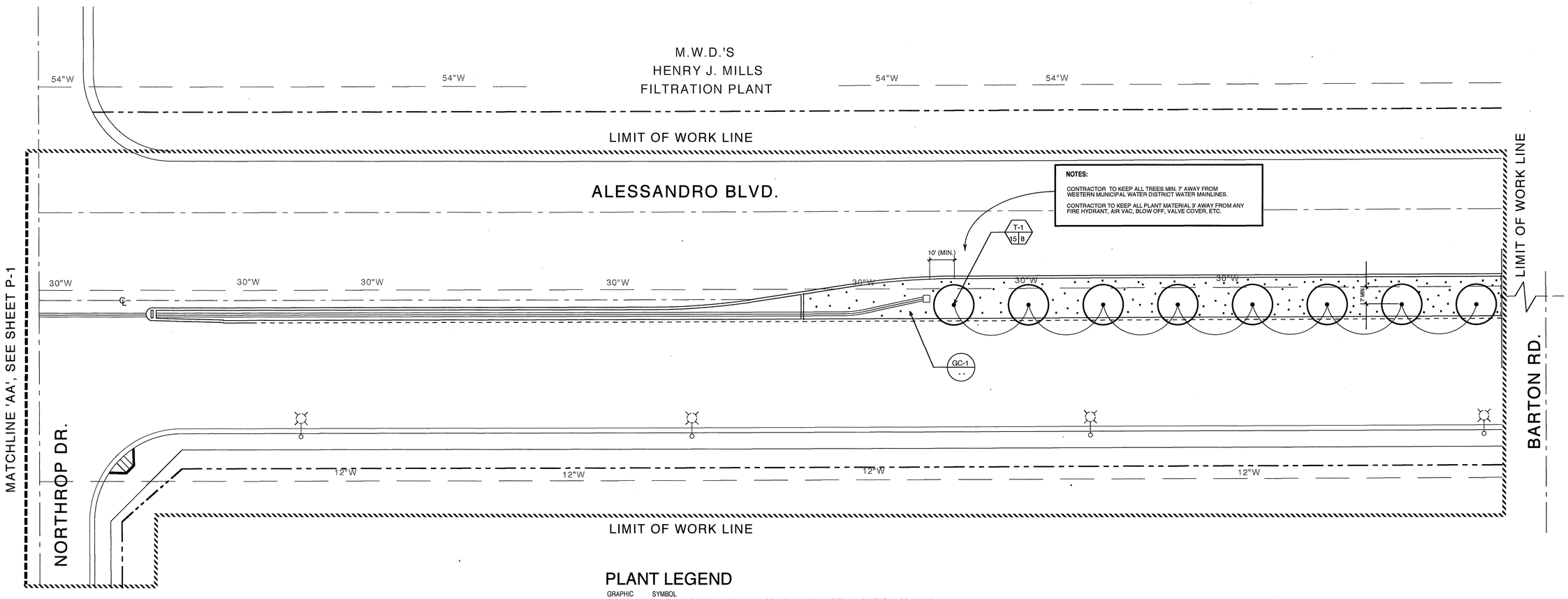

PLANT LEGEND

GRAPHIC SYMBOL	SYMBOL CALL-OUT	BOTANIC NAME	COMMON NAME	SIZE	SPACING	COMMENTS
TREES						
	T-1	Lagerstroemia indica	Crape Myrtle	15 gallon	30' o.c.	Standard (Red Flowers)
GROUND COVERS						
	GC-1	Hydroseeded Turf	"Marathon" TM Seed			Available from: Southland Sod (1-800-632-3400)

NOTES:

1. Contractor is responsible for any damage caused by his work. Contractor is also responsible for repairing any irrigation lines/ sprinkler heads, and existing landscape areas that are damaged during construction.

LICENSED LANDSCAPE ARCHITECT
Richard W. Krumwiede 2834
Registered Date
11-9-00
Date
STATE OF CALIFORNIA

SHEET KEY MAP

N.T.S.

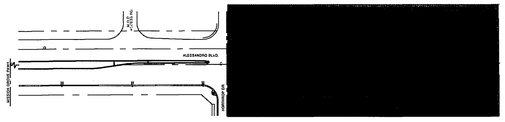

NORTH

SCALE: 1"=20'

THE LICENSED LANDSCAPE ARCHITECT SIGNING THESE PLANS IS RESPONSIBLE FOR ASSURING THE ACCURACY AND ACCEPTABILITY OF THE WORK HEREON . IN THE EVENT OF DISCREPANCIES ARISING DURING CONSTRUCTION, THE LICENSED LANDSCAPE ARCHITECT SHALL BE RESPONSIBLE FOR DETERMINING AN ACCEPTABLE SOLUTION AND REVISING THE PLANS FOR APPROVAL BY THE CITY.

Underground Service Alert

Call: TOLL FREE

1-800
227-2600

TWO WORKING DAYS BEFORE YOU DIG

PLAN CROSS REFERENCES

FOR NOTES AND LEGENDS, SEE SHEET P-1
FOR DETAILS, SEE SHEET P-3
FOR SPECIFICATIONS, SEE SHEET S-2
FOR CORRESPONDING CONSTRUCTION PLAN SEE SHEET C-2
FOR CORRESPONDING IRRIGATION PLAN SEE SHEET I-2

ARCHITERRA DESIGN GROUP
LANDSCAPE ARCHITECTURE
SITE PLANNING
10630 Town Center Dr., Suite 128
Rancho Cucamonga, CA 91730
(909) 484-2800
fax (909) 484-2802
Richard Krumwiede
CA Lic. #2834 AZ Lic. # 29115 NV Lic. # 446

PC-4298-M

MARK	REVISIONS	APPR.	DATE

DESIGNED BY J.R.G. DRAWN BY J.R.G. CHECKED BY J.A.F.

CITY OF RIVERSIDE
PUBLIC WORKS DEPARTMENT

APPROVED BY	DATE	BY
PRINCIPAL ENGINEER	11/1/2000	
PARK DEPARTMENT	11/08/00	
TRAFFIC DIVISION		
DEPUTY P. W. DIRECTOR	11/14/00	

APPROVED BY Richard McGrath
PUBLIC WORKS DIRECTOR
DATE 12-4-2000

PLANTING PLAN
ALESSANDRO BLVD. MEDIAN ISLANDS EAST & WEST OF NORTHROP DR.

HORIZ. SCALE: 1"=20' VERT. SCALE:

ACCOUNT NO.
R-3527-L
P-2
SHEET 9 OF 12
DATE: 10/9/00

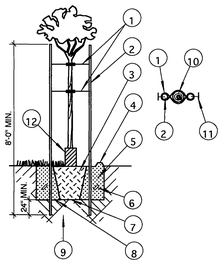

LEGEND:
1. "CINCH TIE" AS MANUFACTURED BY V.I.T. CO. SEE SPEC.'S.
2. 2" DIA. LODGE POLE PINE TREE STAKE, (2) PER TREE.
3. CONTAINER ROOT BALL.
4. 4" BERM TO FORM DEPRESSED WATERING BASIN.
5. PREPARED BACKFILL MIX PER SPECIFICATIONS.
6. FERTILIZER TABLETS PER SPECIFICATIONS.
7. SET ROOTBALL AGAINST UNDISTURBED SOIL.
8. PLANT PIT TO BE (2) TIMES THE WIDTH OF THE ROOT BALL.
9. UNDISTURBED NATIVE SOIL.
10. TREE TRUNK.
11. GALV. ROOFING NAIL.
12. ARBOR GUARD

PREVAILING WIND DIRECTION

NOTES:
1. UNTANGLE MATTED ROOTS BY LOOSENING ALL ROOTS AT EDGE OF ROOT BALL WITH WATER FROM HOSE; DO NOT CRACK ROOT BALL.
2. PLACE FERTILIZER TABS IN PLANT CONTAINER PRIOR TO PLANTING FOR OBSERVATION PURPOSES

GENERAL PLANTING NOTES

1) Contact the Street Tree Inspector at 951-8126 two working days (48 hours) prior to installing any plant material.
2) Trees planted in turf areas shall be maintained with a minimum 12" radius around the tree free of turf throughout the maintenance period.
3) Watering basins may be removed after the maintenance period.
4) For staking information as applicable, refer to Standard Detail 1002.
5) For guying information as applicable, refer to Standard Detail 1003.
6) For specification information, refer to City of Riverside Park and Recreation Department Standard Specifications, Section 02480 Planting.
7) Provide Fertilizer Tablets as follows:

1 gallon plant	2 tablets
5 gallon plant	3 tablets
15 gallon plant	5 tablets
24" box plant	8 tablets

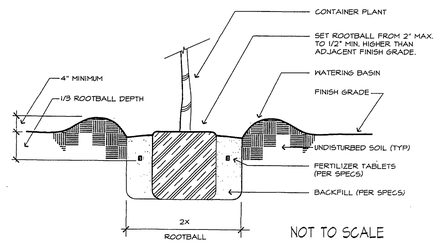

A TREE PLANTING
SCALE: N.T.S.

B PLANTING DETAIL / NOTES
SCALE: N.T.S.

C SCALE: N.T.S.

D SCALE: N.T.S.

E SCALE: N.T.S.

F SCALE: N.T.S.

G SCALE: N.T.S.

H SCALE: N.T.S.

I SCALE: N.T.S.

J SCALE: N.T.S.

Underground Service Alert

Call: TOLL FREE
1-800
227-2600
TWO WORKING DAYS BEFORE YOU DIG

THE LICENSED LANDSCAPE ARCHITECT SIGNING THESE PLANS IS RESPONSIBLE FOR ASSURING THE ACCURACY AND ACCEPTABILITY OF THE WORK HEREON. IN THE EVENT OF DISCREPANCIES ARISING DURING CONSTRUCTION, THE LICENSED LANDSCAPE ARCHITECT SHALL BE RESPONSIBLE FOR DETERMINING AN ACCEPTABLE SOLUTION AND REVISING THE PLANS FOR APPROVAL BY THE CITY.

LICENSED LANDSCAPE ARCHITECT
Richard W. Krumwiede 2834
STATE OF CALIFORNIA
11-9-00
Date

ARCHITERRA DESIGN GROUP
LANDSCAPE ARCHITECTURE
SITE PLANNING
10630 Town Center Dr., Suite 128
Rancho Cucamonga, CA 91730
(909) 484-2800
fax (909) 484-2802
Richard Krumwiede
CA Lic. #2834 AZ Lic. # 29115 NV Lic. # 446

MARK	REVISIONS	APPR.	DATE

DESIGNED BY J.R.G. DRAWN BY J.R.G. CHECKED BY J.A.F.

CITY OF RIVERSIDE
PUBLIC WORKS DEPARTMENT

APPROVED BY	DATE	BY
PRINCIPAL ENGINEER	12/6/00	
PARK DEPARTMENT	11/03/00	
TRAFFIC DIVISION		
DEPUTY P. W. DIRECTOR	12/4/00	

APPROVED BY Richard McGrath
PUBLIC WORKS DIRECTOR
DATE 12-9-2000

PLANTING DETAILS
ALESSANDRO BLVD.
MEDIAN ISLANDS EAST &
WEST OF NORTHROP DR.

HORIZ. SCALE: N.T.S. VERT. SCALE: N.T.S.

PC-4298-M
ACCOUNT NO.
R-3527-L
P-3
SHEET 10 OF 12
DATE: 10/9/00

CONCRETE

PART 1 - SCOPE OF WORK

1.01 WORK INCLUDED

Work includes, but is not limited to the following: Furnish all labor and materials, appliances, tools, equipment, facilities, transportation, and services necessary for Installing all concrete work complete as indicated on the drawings and specifications including, but not limited to:

A. Furnish and set all reinforcing steel, bolts and anchors.

B. Install all items required by other trades which are to be cast into concrete

C. Concrete mow curbs, banding, poured in place walls, other flatwork, footings, pans and slabs for walls, fencing, benches, controllers, decks, etc., where applicable

PART- 2 GENERAL

All requirements of subsection 3 31, standard specifications for Public Works Construction, shall apply except as specified herein

2.1 INSPECTION OF SITE

Examine related work and surfaces before starting work in this section Report to the Landscape Architect in writing, site conditions which will prevent the proper provision of this work. Beginning the work in this section without reporting unsuitable conditions to the Landscape Architect constitutes acceptance of site conditions by the Contractor. Any required removal, repair, or replacement of this work caused by unsuitable conditions shall be done at no additional cost to Owner

2.2 PROTECTION OF EXISTING CONDITIONS

Contractor shall acquaint himself with all site conditions He shall take necessary precautions to protect existing site conditions Should damage be incurred, this Contractor shall repair damage to its original condition or furnish and install equal replacement at his own expense, to the satisfaction of the Owner

2.4 COORDINATION

A. Cooperation On-Site, Coordinate and cooperate with other contractors to enable the work to proceed as rapidly and as efficiently as possible

B. Work With Other Trades; Coordinate with General Contractor items of other trades to be furnished and set in place Such portions of their work as all or in part embedded, built-in, attached to, or supported by the work shall be executed by them in ample time that progress of the work is not delayed Any cutting or patching made necessary to comply with this injunction shall be done at the Contractor's expense.

2.5 APPROVAL

Wherever the terms "approve," "approval," or "approved" are used in the Specifications, they mean approval of the Landscape Architect, the Owner's Representative or their field representatives, or in writing

2.6 SUBMITTALS

At least 10 days after award of contract, Contractor shall submit for approval samples and/or manufacturers' latest catalog cuts and specifications of the following prior to beginning work Approved samples shall be standards for completing work

A. One 2-ft. x 2-ft x 2-in sample for each type of concrete finish and color at the job site

B. Color samples for expansion joint compounds

C. All submittal data shall be forwarded in a single package to the Landscape Architect within 15 days after award of the General/Contract unless otherwise approved by the Landscape Architect and/or Owner's Construction Representative.

2.7 SUBSTITUTIONS

A. Standards; Specific reference to manufacturers' names and products specified in this section are used as standards; this implies no right to substitute other material or methods without written approval of the Landscape Architect.

B. Approval; Installation of any approved substitutions is Contractors's responsibility Any changes required for installation of any approved substitution must be made to the satisfaction of Landscape Architect and without additional cost to Owner Approval by Landscape Architect of substituted materials and/or dimensional drawings do not waive these requirements

PART 3 - MATERIALS

Materials shall be of first quality and of domestic manufacture as noted below:

A. Portland cement shall conform to ASTM-C150, Type I or Type II

B. Concrete aggregate shall conform to ASTM-C33

C. Water shall be clean, free from strong acid, alkali, oil or organic matter

D. Admixture for all formed concrete shall be SIKA Chemical Corp.'s "Plastiment", or approved equal, applied in strict accordance with manufacturer's directions.

E. Reinforcement reinforcing steel ASTM-A15 and ASTM-A305 Wirefabric ASTM-A185

F. Forms:

1 Lumber shall be "construction grade" Douglas fir

2 Plywood for forming of concrete which is exposed shall be Plyform. All plywood used for forming shall be at least 5/8 -inch thick and edge sealed.

G. Expansion joint filler shall conform with ASTM-D1751 (premolded).

PART 4 -EXECUTION

4.01 CONCRETE DESIGN MIX

A. Contractor assumes responsibility for the design mix and guarantees the specified ultimate strength as indicated or specified herein

B. Concrete, minimum 28-day ultimate strength shall be 2000 PSI

C. Ready-mixed concrete shall conform to ASTM-C94

4.02 CONCRETE PROPORTIONS & CONSISTENCY

A. The proportions of aggregate to cement shall provide a dense mixture which will readily work into all corners of the forms and around all reinforcements without any segregation of the materials, cause excess free water to collect on the surface or cause excessive bleeding of the forms

B. The recommended practices of the American Concrete Institute shall be followed Inall applicable procedures The maximum slump shall not exceed (4") four inches for footings, slabs on grade, and mass concrete, 5 inches for foundation walls

4.03 CONCRETE APPROVAL

The concrete quality, proportions, consistency, etc , is subject to the approval of Owner, and no changes shall be made without prior written approval

4.04 FORMWORK

A. Forms for concrete work shall be either metal or wood Forms that are warped or that do not have a smooth straight upper edge shall not be used Forms shall be set with the upper edge of the board true to line and grade and shall be staked rigidly in place with stakes set not more than four feet (4') apart so as to remain immovable throughout the construction. All forms shall be approved by Owner within a tolerance of one percent (1%) All materials shall be accurately and separately weighted and mixing shall continue until the distribution of material is uniform and the mass of concrete is homogeneous.

B. Two and one-half (2 1/2) gallons of water per cubic yard, shall be withheld from the mix at the plant, and all or a portion may be added to the mix at the job site as directed by the Inspector The concrete shall be mixed at least 5 minutes after such water is added and not less than 3 minutes of this time shall be immediately prior to the discharge of the batch. Total mixing time after adding original water shall be at least 15 minutes

C. Concrete which is not placed within 90 minutes after the introduction of cement and water, and concrete which has stood for 30 minutes after leaving the mixer, shall not be used

4.05 REBAR

Reinforcing bar shall be spliced with 40 bar diameters minimum overlap

4.06 CONVEYING AND PLACING

A. Before pouring, all forms shall be thoroughly cleaned and made tight The bottom of trenches shall be wet down before pouring footings; earth shall not be muddy at the time of pouring Concrete shall not be placed until reinforcements, rough hardware, and forms are approved by Owner

B. Before depositing new concrete against old concrete, all laitance shall be removed, and the surfaces roughened to expose the embedded aggregate. The surfaces shall then be covered with cement grout, using the specified mix with 1/2 of the course aggregate omitted, 1-1/2 inches thick

C. Conveying and placing of concrete shall be done so as to prevent separation of ingredients, and in no case shall the free fall exceed 6 feet Tremies shall be used as required Surfaces of concrete shall be kept reasonably level, with a minimum amount of concrete being allowed to flow after being placed Placing shall be performed as a continuous operation until each section is completed

D. Concrete shall be spaded and vibrated with mechanical vibrators to a maximum subsidence, without separation of ingredients The moving of concrete by vibration will not be permitted

4.07 COLORED CONCRETE

Integral color and Dust-On color hardner shall be as specified on plans and details

4.08 GROUTING

A. Grout shall be composed of one part Portland Cement and two parts of fine aggregate by volume Materials shall be mixed dry and water added just sufficient to make the mixture flow under its own weight

B. For dry tamp cement grout, a minimum of water shall be added to the mix so that when wet sample is squeezed hard in the hand, surface moisture, but no free water, shall appear on the sample Do not mix more than can be used in 30 minutes

4.09 CURING AND PROTECTION

A. All exposed surfaces of concrete shall be protected from damage due to temperature, elements, and construction operations

B. Curing shall be as follows;

1 All exposed surfaces of concrete shall be protected form premature drying and freshly placed concrete shall be protected against wash by rain All concrete shall be kept wet for a period of ten days after placing. In order that curing water may reach both surfaces of walls, the forms shall be loosened and water shall be poured over the tops of the walls and allowed to run down between the concrete and the forms

2. All liquid curing compounds shall be used in accordance with the manufacturer's recommendations and shall not be used on surfaces receiving concrete hardener

4.10 DEFECTIVE CONCRETE

A. Concrete which is not in accordance with these specifications, out of line, level, or plumb, showing structural cracks, rock pockets, voids, spalls, honeycombing, exposed reinforcing or other damaged surfaces shall be considered as defective.

B. All lines and irregularities shall be removed from exposed concrete surfaces while the concrete is still green Where patching is required, all loose and uniform concrete shall be removed prior to patching

4.11 CONCRETE FINISHES

Flat surfaces shall be screeded to the required levels and slopes and then any excess water or laitance removed Concrete shall be compacted with a grid tamper and then floated to a true and level surface within the tolerance of 1/8-inch along a 10-inch straight edge Contractor shall ensure positive drainage on all flatwork See Plans for concrete finish in landscape areas

4.12 EXPANSION JOINTS

Placement of expansion joints shall be as directed and determined by layouts of slab markings noted on drawings. Expansion joint material shall be Poly Foam, or approved equal, or as noted on Plans Expansion joints shall be recessed one-quarter inch from finish surface and sealed with a bead of grey thiokol sealant or equal. Silica sand to match concrete color shall then be tamped into thiokol bead

4.13 CONTROL JOINTS

Control joints and other edges shall be formed in fresh concrete using a clean edging or jointing tool to provide a smooth uniform finish.

4.14 PROTECTION

All finished concrete work shall be barricaded to pedestrian traffic for three (3) days Barricades shall be placed immediately after concrete finishing Contractor shall furnish, place and remove all of his own barricades Contractor shall be responsible for any damage to new construction and replacement of repair of the work shall be made without added cost to Owner

4.15 PATCHING

If patching is necessary and permissible, a bonding agent such as Weld-Crete, or equal, shall be used.

4.16 CONCRETE CURBS

Construct concrete curbs at locations shown on Plans as detailed, true to line and grade, as approved by the local County or City. Use natural grey Portland cement concrete, 2000 PSI compressive strength Locate expansion joints as detailed or shown, and as directed, at intervals not to exceed fifteen feet (15') Finish with steel trowel, then brush with bristle brush parallel to face or edge.

4.17 CLEAN-UP

Upon completion of all concrete work and before final acceptance, Contractor shall remove all tools, surplus materials, apparatus, debris, etc , from the site and the site shall be left in a clean, neat condition acceptable to Owner

PART 5 - WARRANTIES

In addition to manufacturers' guarantees or warranties, all work shall be warranted for one year from the date of final acceptance against all defects in materials and workmanship by contractor Warranty shall also cover repair of damage to any part of the premises resulting from defects in materials and workmanship to the satisfaction of the Owner

END OF SECTION

CONCRETE SPECIFICATIONS NOTE:

FOR CONCRETE INFORMATION REFER TO THE ***STANDARD SPECIFICATIONS FOR PUBLIC WORKS CONSTRUCTION (GREEN BOOK)***; EDITION PER THE CITY OF RIVERSIDE IF APPLICABLE). REFER TO SECTIONS RELATED TO THE INSTALLATION, PER AND POST INSTALLATION OF CONCRETE WORK, MATERIALS, LABOR , AND CLEAN-UP. THE STANDARD SPECIFICATIONS FOR PUBLIC WORKS CONSTRUCTION IS AVAILABE FROM:

BI BUILDING NEWS
3055 OVERLAND AVENUE
LOS ANGELES, CALIF. 90034
(310) 202-7775

IF A CONFLICT BETWEEN THESE SPECIFICATIONS AND THE ***GREEN BOOK*** OCCURS, THE ***GREEN BOOK*** WILL SUPERSEDE.

THE LICENSED LANDSCAPE ARCHITECT SIGNING THESE PLANS IS RESPONSIBLE FOR ASSURING THE ACCURACY AND ACCEPTABILITY OF THE WORK HEREON . IN THE EVENT OF DISCREPANCIES ARISING DURING CONSTRUCTION, THE LICENSED LANDSCAPE ARCHITECT SHALL BE RESPONSIBLE FOR DETERMINING AN ACCEPTABLE SOLUTION AND REVISING THE PLANS FOR APPROVAL BY THE CITY.

LICENSED LANDSCAPE ARCHITECT — Richard W. Krumwiede 2853 — 7-31-02 — Date — STATE OF CALIFORNIA

MARK	REVISIONS	APPR	DATE

DESIGNED BY J.R.G. DRAWN BY J.R.G. CHECKED BY J.A.F.

CITY OF RIVERSIDE
PUBLIC WORKS DEPARTMENT

	APPROVED BY	DATE	BY
PRINCIPAL ENGINEER		12/11/00	
PARK DEPARTMENT		12/6/00	
TRAFFIC DIVISION			
DEPUTY P. W. DIRECTOR		12/11/00	

APPROVED BY
PUBLIC WORKS DIRECTOR
DATE 12-6-2000

CONSTRUCTION SPECS
ALESSANDRO BLVD.
MEDIAN ISLANDS EAST &
WEST OF NORTHROP DR.

HORIZ. SCALE: N.T.S. VERT. SCALE: N.T.S.

ACCOUNT NO.
R-3527-L
S-1
SHEET 11 OF 12

DATE: 10/9/00

PC-4298-M

ARCHITERRA DESIGN GROUP
LANDSCAPE ARCHITECTURE
SITE PLANNING
10633 Town Center Dr., Suite 109
Rancho Cucamonga, CA 91730
(909) 484-2902
fax (909) 484-2902

Richard Krumwiede
CA Lic #3834 AZ Lic # 29115 NV Lic # 446

LANDSCAPE IRRIGATION SYSTEM

PART 1 - GENERAL

1.01 STANDARD SPECIFICATIONS: The provisions of the "Standard Specifications for Public Works Construction" current edition, shall apply except as modified herein.

1.02 SCOPE: The work of this Section shall consist of furnishing all labor, materials, equipment, appliances and services necessary for the execution and completion of all **Irrigation Work** as shown on the Plans and as described in the Specifications including, but not necessarily limited to, the following:

- Provide complete operating irrigation systems;
- Installation of new and refurbishment of existing irrigation systems as necessary to provide complete operating irrigation systems for all planting areas within the Park;
- 120 volt electrical service for and connection to the controller;
- Replacement of existing controllers with Toro Network 8000 Irrigation Controller;
- Telephone service for and connection to the Toro Network 8000 Controller;
- Coordination with Work of other sections.
- Testing;
- Clean-up;
- Replacement, Repairs, Guarantees and Warranty Work.

1.03 RELATED WORK:

Submittals	01300
Site Clear and Grub and Selective Demolition	02110
Site Grading	02210
Planting	02480
Concrete, Paving and Curbs	02515
Electrical	16530

1.04 SUBMITTALS:

A. Materials List: Contractor shall submit a complete materials list for approval by the Parks Department Representative prior to performing any Work. Catalog data and full descriptive literature must be submitted whenever the use of items differ than those specified is requested. Notarized certificate must be submitted by plastic pipe and fitting manufacturer indicating that material complies with the Project Specifications, unless material has been previously approved, and used on other projects by City. Material list shall be submitted using the following format:

Item	Description	Manufacturer	Model No.
1	Pressure Supply Line	Lasco	Sch. 40
2	Lawn Head	Rainbird	2400
etc.	etc.	etc.	etc.

B. "Record" Prints:
1. Record accurately on one set of blue-line prints all changes in the Work constituting departures from the Plans, including changes in pressure and non-pressure line locations.
2. The changes and dimensions shall be recorded in a legible and workmanlike manner to the satisfaction of the Parks Department Representative. Prior to final inspection of the Work, submit "record" prints to City for approval.
3. Dimension from two permanent points of reference (buildings, monuments, sidewalks, curbs, pavement, etc.). Data to be shown on "record" prints shall be recorded day-to-day as the project is being installed.
4. Show locations and depths of the following items:
   a) Point of connection.
   b) Routing of irrigation pressure lines (dimension maximum 100 feet along routing).
   c) Ball valves.
   d) Irrigation remote control valves.
   e) Quick coupling valves.
   f) Routing of control wires.
   g) Related equipment (as may be directed).
5. Maintain record prints on site at all times.

1.05 INSPECTIONS:

A. Inspections will be required for:
1. Pressure test of irrigation main line.
2. Coverage Test.
3. Final inspection/ start of maintenance.
4. Final acceptance.

B. Inspection Requests: Contractor shall contact the Park Projects Inspector in advance for requesting all inspections as follows:
1. Pressure supply line installation and testing- 36 hours (1-1/2 working days)
2. System layout- 36 hours (1-1/2 working days)
3. Coverage tests- 36 hours (1-1/2 working days)
4. Final Inspection- 48 hours (two working days)

C. Evidence of Inspection by Others: When inspections have been conducted by other than the Park Projects Inspector, Contractor shall show evidence of when and by whom these inspections were made.

D. Requirements for Inspection: No inspection is to commence without "record" prints available on the site. In the event Contractor calls for an inspection without up to date "record" prints, without completing previously noted corrections, or without preparing the system for inspection, the inspection may be cancelled and Contractor back charged for the direct costs of all City personnel time and consultant time lost, at the discretion of the Parks Department Representative.

E. Closing in Uninspected Work: Do not allow or cause any of the Work of this section to be covered up or enclosed until it has been inspected, tested and approved by the Parks Department Representative.

F. Coverage test: When the irrigation system is completed, Contractor shall perform a coverage test in the presence of the Park Projects Inspector to determine if the water coverage for planting areas is complete and adequate. This test must be accepted by the Parks Projects Inspector before planting can commence.

G. Hydrostatic test:
1. Prior to the installation of any valves, all pressure lines shall be tested under a hydrostatic pressure of 150 psi for a period of not less than two hours, with all ends of lines capped and the line fully charged with water after all air has been expelled from the line.
2. All hydrostatic tests shall be made in the presence of the Park Projects Inspector or Inspector's designated representative. No pressure line shall be backfilled until it has been inspected, tested, approved in writing, and the mainline and valve locations have been noted on the "record" prints.
3. Contractor shall furnish the necessary force pump and all other test equipment, and shall perform the test.

1.06 TURNOVER ITEMS:

A. Controller charts:
1. "Record" prints must be approved by the Parks Department Representative before charts are prepared.
2. Provide one controller chart for each automatic controller. The chart shall show the entire area covered by the controller, preferably in a single sheet. The chart shall be a reduced copy of the approved "record" print. Reduce the print to a size that is the maximum dimensions that will fit within the controller door without folding. If the controller sequence is illegal at this reduction scale, the chart may be provided as a "multi-sheet" chart to provide adequate legibility.
3. Each control station on the chart shall be marked with a different color to show its area of coverage.
4. When completed and approved, the chart shall be hermetically sealed between two pieces of plastic, each piece being minimum 20 mils in thickness. The chart shall be installed in the controller enclosure using Velcro fasteners, and three different color grease pencils (red, black and blue) shall be provided in the enclosure for maintenance notations on the chart.
5. Controller charts shall be completed prior to the final acceptance inspection.

B. *Operation and Maintenance Manuals*: Within a minimum of 14 calendar days prior to the acceptance of construction, prepare and deliver to the Parks Department Representative all required descriptive materials, properly prepared in two individually bound copies of the operation and maintenance manual. The manual shall describe the material installed and shall be in sufficient detail to permit operating personnel to identify, operate, and maintain all equipment. Spare parts lists and related manufacturer's information shall be included for each equipment item installed. Each complete, bound manual shall include the following information:
1. Index sheet stating Contractor's address and telephone number, including names and addresses and telephone numbers of local manufacturer's representatives.
2. Complete operating and maintenance instructions on all major equipment.

C. Materials to be furnished: The following items shall be supplied as part of this Contract and shall be turned over to the Park Projects Inspector at the conclusion of the Project at the Final Acceptance Inspection:
1. 4% additional irrigation heads of each type and spray pattern shown.
2. Two (2) special tool/wrenches for disassembly and adjustment of each type irrigation equipment/heads installed that require such special tools/wrenches.
3. Two keys for each type of automatic controller.
4. Two quick couplers "quills" with a 3/4" bronze hose bib, bent nose type with hand wheel and two quick coupler locking lid keys.
5. One valve box cover key.
6. "Record" prints.
7. Remove and turn over backflow device valve handles.
8. Documentation of Water Department's inspection and acceptance of backflow device.

1.07 GUARANTEE:

A. General: The entire irrigation system, including all Work done under this Contract, shall be guaranteed against all defects and fault of material and workmanship for a period of one (1) year following Final Acceptance of the Work as documented by the Notice of Completion filed with the Riverside County's Recorder Office. All materials used shall carry a manufacturer's guarantee of one (1) year. Should any problem with the irrigation system be discovered within the guarantee period, it shall be corrected by Contractor at no additional expense to City within fourteen (14) calendar days of receipt of written notice from City. When the nature of the repairs as determined by the Director constitute an emergency (e.g. broken pressure line) City may proceed to make repairs at Contractor's expense. Any and all damages to existing improvement resulting either from faulty materials or workmanship, or from the necessary repairs to correct same, shall be repaired to the satisfaction of the Parks Department Representative by Contractor, all at no additional cost to City.

B. Form of Guarantee: Guarantee shall be submitted on Contractors own letterhead as follows:

PROJECT: ____________
LOCATION: ____________

We hereby guarantee the irrigation system we have furnished and installed against defects in materials and workmanship, ordinary wear and tear and unusual abuse, or neglect excepted, and that the Work has been completed in accordance with the Plans and Specifications. We agree to repair or replace any or all of the Work, together with any other adjacent Work which may be displaced by doing so, that may prove to be defective in its workmanship or materials within a period of none (1) year after the date the Notice of Completion for the above named Project is filed with the County Recorder by the City of Riverside, California, at no additional cost to City. We shall make such repairs or replacements within 14 calendar days following written notification by City. When the immediate repair or replacement of the Work is necessary to ensure the public safety and welfare, which would be endangered by continued usage of the facility, such circumstance will be deemed an operational emergency. In the event of such emergency, after City contacts our firm and after authorizing 24 hours to initiate repairs, if we fail to initiate and diligently complete such repairs in a timely manner, the Director may direct City forces to perform such functions as the Director may deem necessary to correct the Work and immediately place the facility back in operational condition. If such procedure is implemented, we shall bear all expenses incurred by City. In all cases, the judgement of the Director shall be final in determining whether an operational emergency exists. In the event of our failure to make such repairs or replacements within the time specified after receipt of written notice from City (other than an operational emergency), we authorize City to proceed to have said repairs or replacements made at our expense and we will pay the costs and charges therefore upon demand.

SIGNED: ____________
ADDRESS: ____________
____
PHONE: ____________

C. Operational Instruction: After the system has been completed, Contractor shall instruct the Parks department Representative in the operation and maintenance of the system and shall furnish a complete set of operating instructions.

D. Trench Settlement: Any settling of trenches which may occur during the one-year period following acceptance shall be repaired to City's satisfaction by Contractor without any additional expense to City. Repairs shall include the complete restoration of all planting, paving or other improvements of any kind which are damaged as a result of the Work.

PART 2 - MATERIALS

2.01 **GENERAL:** All materials shall conform with Section **212- Irrigation Systems Materials** of the Standard Specification except as modified herein.

2.02 **PIPE AND FITTINGS:**

A. General:
1. Pressure supply lines 2 inches in diameter and up to 8 inches in diameter shall be either Class 315 solvent weld PVC or Class 200 rubber gasket type PVC. Solvent weld and ring type pipe shall not be used together on the same pressure supply line.
2. Pressure supply lines 1-1/2 inches in diameter and smaller shall be minimum schedule 40 PVC.
3. Non-pressure lines shall be minimum Class 200 PVC.

B. Steel Pipe: Amend Standard Specifications Section **212-2.1.2 Steel Pipe** to read:

"All steel pipe shall be hot-dipped galvanized,....", and add: "All fittings for steel pipe shall be 250 pound rated galvanized malleable iron, banded pattern. Pipe sizes indicated on the Plans are nominal inside diameter, unless otherwise noted."

C. Plastic Pipe:
1. Add the following to Standard Specifications Section **212-2.1.3 Plastic Pipe for Use with Solvent Weld Socket or Threaded Fittings**:

"All plastic pipe shall bear the following markings: manufacturer's name, nominal pipe size, schedule or class, type of material, pressure rating in PSI, NSF seal of approval, and date of extrusion."

2. Amend Standard Specifications Section **212-2.1.3 Plastic Pipe for Use with Solvent Weld Socket or Threaded Fittings** to read:

"All plastic pipe fittings shall be standard weight schedule 40 and shall be injection molded of an improved PVC fitting compound. All threaded plastic fittings shall have injection molded threads. NO cut threads will be accepted on PVC pipe and fittings. All tees and ells shall be manufactured in injection molds that are sidegated. All threaded nipples shall be standard weight schedule 80 with molded threads.

3. Add first sentence of Standard Specifications Section **212-2.1.4 Plastic Pipe for Use with Rubber Ring Gaskets** to read:

"All rubber gasket PVC pipe, couplings, and fittings shall conform to ASTM D 2241 Type 1, Grade 1, 2000-PSI design stress"; and add the following to the Section: "Couplings, rubber gaskets, and fittings shall be as approved by the pipe manufacturer. Ring-type rubber gasket couplings shall permit a five (5) degree deflection of the pipe at each coupling (2-1/2 degrees each side) without ex-filtration or infiltration, cracking or breaking."

D. Asbestos Cement Pipe (ACP): Add the following to Standard Specifications Section **212-2.1.6 Asbestos Cement Pipe and Fittings** : *(Note: Installation of new ACP shall not be a part of the project. This specification information is provided in the event connections to existing piping of this type is necessary.)* Fittings for ACP connection laterals shall be cast iron tees and bossed couplings except as follows:
1. Double strap service clamps with rubber seals and flat bronze straps may be used for connections of 50 percent or less than the diameter of pipe.
2. Tapped ACP couplings with brass inserts may be used for connections of 3/4, 1, 1-1/4, 1-1/2 and 2 inches.

2.03 **VALVES AND VALVE BOXES:**

A. Valves:
1. Ball Valves: All ball valves shall be bronze bodied, capable of withstanding a minimum working pressure of not less than 150 psi.
2. Manual Control Valves: Add the following to Standard Specifications Section **212-2.2.3 Manual Control Valves**: Anti-siphon-type valves shall be all bronze with swivel-type replaceable seating members and an approved vacuum breaker as an integral part of assembly.
3. Quick-coupling Valves: Add the following to Standard Specifications Section **212-2.2.6 Quick Coupling Valves and Assemblies**: Quick coupling valves shall have locking vinyl cover and shall be 1" in size.
4. Remote Control Valves: Add the following to Standard Specifications Section **212-2.2.4 Remote Control Valves**:
   a) Valves shall be spring-loaded, self-cleaning, packless diaphragm activated, of a normally closed type.
   b) Valve solenoid shall be corrosion-proof and constructed of stainless steel molded in epoxy to form one integral unit, and shall be 24 volt A.C., 2.0 watt maximum (2" and smaller valves).
   c) Valve shall close against flow without chatter and with minimum closing surge pressure (minimum 5 seconds closing time per valve).
   d) Valve shall be completely serviceable in the field without removing valve body from line.

B. Boxes:
1. Concrete Valve Boxes: Add the following to Standard Specifications Section **212-2.2.7 Valve Boxes:** Remote control valve boxes shall be rectangular concrete boxes with non-hinged locking cast-iron covers. Valve station number shall be stenciled in two-inch-high (2") numerals on cover using epoxy resin base paint of a constraining color. Ball valve boxes shall be round concrete boxes with non-hinged cast iron covers marked either "Ball Valve" or "G.V." with letters cast or tooled in the cover.
2. Plastic Valve Boxes:
   a) General: Valve boxes and covers shall be fabricated from a durable plastic material resistant to weather, sunlight and chemical reactions. The covers shall be secured with a hidden latch mechanism or bolts. The cover and box shall be capable of sustaining a load of 1,500 pounds. Valve box extensions shall be by the same manufacturer as the valve box. The box covers shall be factory embossed for the designated use and stenciled by the installer with 2" high letters in a contrasting color as noted below. Boxes and covers shall be as manufactured by AMETEK or City approved equal.
   b) Rectangular Plastic Boxes and Covers: Shall be a minimum of 12" wide x 18" long, with depths as necessary to protect the valve and provide the clear dimensions as detailed and/or specified. The covers shall be embossed with words or initials to identify the use for the box (e.g. "Flush Valve" or the letters "F.V.", and Air Relief Valve or the letters "A.R.V.") as noted on the Plans.
   c) Round Plastic Boxes and Covers: Shall be minimum 12" diameter, round boxes with covers embossed with words to identify the use for the box (e.g. "Quick Coupler Valve" or the letters "Q.C.V.") and shall be marked as noted on the Plans.

2.04 **BACKFLOW PREVENTION DEVICE:** Add the following to Standard Specifications Section **212-2.3 Backflow Preventer Assembly**: The backflow prevention unit shall be a reduced pressure type vacuum breaker of the size, manufacturer, and model number as indicated on the Plans. If not indicated, the device shall be the same size as the water service and the manufacturer and model number shall be as approved by the Parks Department Representative.

2.05 **IRRIGATION HEADS:** All irrigation heads shall be as shown on the Plans and shall conform with section **212-2.4 Sprinkler Equipment** of the Standard Specifications.

2.06 **ELECTRICAL MATERIALS:**

A. Conduit: Amend Standard Specifications Section **212-3.2.1 Conduit** to read: All conduit below grade shall be schedule 40 PVC of sufficient size to carry all proposed wiring. Conduit above grade shall be galvanized steel per the Standard Specifications. Low Voltage (24 volt) wiring shall be provided with a separate conduit/sleeve from both voltage wiring (110/120 volt and higher) and the irrigation mainline sleeve.

B. Electrical Service: Materials for electrical service shall comply with the Standard Specifications, governing utility agency standards, and requirements of all applicable codes.

C. Wire: Add the following to Standard Specifications Section **212-3.2.2 Conductors**: "All low voltage conductors shall be 14 gauge for control and 12 gauge for common wires. All low voltage common wire shall be white with a colored stripe. Stripe color shall be different for each controller installed. All low voltage control wire shall be of one color other than white or green. A different color control wire shall be used for each controller installed."

D. Communication Cables: All communication from Phone Link Concentrator to satellite, and satellite to satellite shall be through a twisted wire pair, shielded, direct burial cable (armored cable) as manufactured by Paige Electrical Corporation; P.O. Box 368 Union, New Jersey 07083, telephone: 201-687-7810. Model Number P7162D-A1, armored. Any splices shall be of a Paige Electrical Corporation approved method in a valve box for access. Valve box to be marked "communication cable."

2.07 **CONTROLLER UNIT:** Add the following to Standard Specifications Section **212-3.3 Controller Unit**:

A. Conventional Type: Controller shall be wall mounted type, as indicated on the Plans, with a heavy duty watertight case and locking hinged cover.
1. Central/Satellite Computer Type: The controller system shall consist of the following:
   a) Satellite Assembly: Toro model #132-76-08, quantities as shown on the Plans; and
   b) Supplemental Satellite Equipment: Toro Sensor Input Board #995-63 and Toro Rain Gauge NW-8000-RG and Toro TempET sensor #995-61, one (1) each to be added to one (1) satellite assembly, with the Rain Gauge and TempET sensors to be remotely mounted on the roof, in a location approved by the Parks Department Representative, and wired to the designated satellite containing the Sensor Input Board; and
   c) Phone Link Concentrator: complete with new ground rod and telephone connection.
2. System Components shall conform with the following:
   a) Satellite Assembly: shall consist of a Toro Network 8000 satellite with features as follows:
      1. Satellite controller shall be the Toro Network 8000 32 station satellite. All satellite controllers shall have the pump start, master valve relay, and remote switch options;
      2. Vandal resistant enclosure with stainless steel pre-drilled removable backboard.
      3. Appropriate satellite controller unit.
      4. A pre-wired terminal strip, grounding rod and ten gauge copper ground wire, and EFI line voltage stabilizer model #OEM 120/20A. The terminal strip shall clearly indicate the proper points of connection for all wiring (e.g. station valves, common, master valve, pump-start, communications, etc.).
      5. Limited 5 year warranty.
      6. Contractor shall provide the following services:
         a. Communication cable test
         b. Communication cable hook-up
         c. Addressing of the system
         d. *Sensing calibration and hook-up*
         e. Instruction in system operation to the user group
      7. The satellite assembly shall be provided with a radio remote access assembly (as manufactured by Remote Control Technology or City approved equal) receptacle pre-wired into the controller providing radio remote control of the controller.
      8. Supplemental satellite equipment and sensors.
      9. Phone Link Concentrator.
   b) Control systems shall include provisions for the installation of a monitor/control unit. The monitor/control unit shall have sufficient solid state control relays to control all existing ballfield lights. Sufficient space shall be provided in the monitor/control unit to add on all future contractors planned for the site.

PART 3 - EXECUTION

3.01 **GENERAL:** All Work shall conform with Section **308- Landscape and Irrigation Installation** of the Standard Specification except as modified herein. No Work of this Section other than sleeving under pavement shall commence prior to the completion and acceptance of all Grading Work *specified in Section **02210 Grading***.

Add the following to Standard Specifications Section **308-5.1 General**:

A. Irrigation System Design & Water Supply:
1. The irrigation system design is based upon an available water pressure of _ _ _ _ p.s.i. at a flow rate of _____ g.p.m. Individual stations are designed to this minimum p.s.i. The system is also designed to withstand maximum pressure of ____ p.s.i. Contractor shall verify the size of the existing water supply/meter and the existing operating water pressure at the water supply location shown on the Plans prior to starting construction. Contractor shall notify the Park Projects Inspector in writing of any discrepancies noted. Failure to provide such written notification may cause Contractor to provide for modifications to the irrigation system as necessary to provide for a fully operational system providing 100% coverage at the operating pressure available, all at no additional cost to City.
2. Connection to, or the installation of, the water supply shall be at the location shown on the Plans. Minor changes caused by actual site conditions shall be made at no additional cost to City.

B. Electrical Service: Contractor shall provide electrical service as necessary and make 120 V connection to the irrigation controller *and the Phone Link Concentrator*.

C. Code Requirements: Prior to all Work of this section, Contractor shall carefully inspect the installed Work of all other trades and verify that all such Work is complete to the point where this installation may properly commence. Verify that the irrigation system may be installed in strict accordance with all pertinent codes and regulations, the as directed by the Park Projects Inspector and at no additional cost to City.

In the event any equipment or methods indicated on the Plans or in the Specifications is in *conflict with local codes, immediately notify the Park Projects Inspector prior to* installing the Work. If this notification is not provided, Contractor shall assume full responsibility for the cost of all revisions necessary to comply with all codes.

D. Grades: Before starting Work of this section, Contractor shall obtain the written acceptance of the Park Projects Inspector of the *fine* grades, and written authorization for the Work of this Section to proceed. Contractor is to keep with the specified material depths with respect to finish grade. Failure to obtain such written acceptance may subject Contractor to adjusting the grades or depth of lines in order to achieve acceptable depths of cover, all as directed by the Park Projects Inspector and at no additional cost to City.

E. Coordination with Work of Other Trades: Make all necessary measurements in the field to ensure precise fit of items in accordance with the original design. Contractor shall coordinate the installation of all irrigation materials with all other Work. Special attention shall be given to coordination of piping locations versus tree and shrub locations and sleeve locations versus pavement installation to avoid conflicts.

F. Maintain Record Prints: Contractor shall maintain "record" prints on site at all times. Upon completion of the Work, transfer all "record" information on changes and dimensions to reproducible sepia prints. The changes and dimensions shall be recorded in a legible and workmanlike manner, to the satisfaction of the Park Projects Inspector.

3.02 **TRENCHING AND BACKFILLING:**

A. Trenching:
1. Add the following to Standard Specifications Section **308-2.2 Trench Excavation and Backfill**: Dig trenches and support pipe continuously on bottom of ditch. Where lines occur paved areas, depth dimensions shall be considered below subgrade.
2. Amend Standard Specifications Section **308-2.2, Subparagraph 2 Waterlines continuously pressurized)** to read: Water lines continuously pressurized- minimum 18 inches, maximum 24 inches. (These measurements are to be from subgrade elevation for piping under pavement).
3. Amend Standard Specifications Section **308-2.2, Subparagraph 3 Lateral Sprinkler Lines)** to read: Lateral irrigation lines- minimum 12 inches and maximum 16 inches.
4. Amend Standard Specifications Section **308-2.2, Trench Excavation and Backfill**: Where it is necessary to excavate adjacent to existing trees, Contractor shall avoid injury to trees and tree roots. Excavation in areas where 2-inch and larger roots occur shall be done by hand. All roots 2 inches and larger in diameter shall be tunneled under and shall be heavily wrapped with wet burlap to prevent scarring or drying. Where trenching machine is run close to trees having roots smaller than 2 inches in diameter, the wall of the trench adjacent to the tree shall be hand trimmed, making a clean cut through the roots. Roots 1 inch and larger in diameter shall be painted with two coats of tree seal or approved equal. Trenches adjacent to trees shall be closed within 24 hours.
5. Permanent Resurfacing: Add the following to Standard Specifications Section **308-5.1 General** to read: All surface improvements damaged or removed as a result of Contractor's operations shall be reconstructed by Contractor to the same dimensions, except for pavement thickness, and with the same type materials used in the original Work. Trench resurfacing shall be 1 inch greater in thickness than existing pavement. Concrete pavement shall be removed and replaced in "full panels" with no horizontal dimensions less than five (5) feet. Contractor shall review the planned limits and lines of concrete removal and replacement with the Park Projects Inspector prior to sawcutting for Removal Work.

B. Backfill:
1. Amend Standard Specifications Section **308-2.2 Trench Excavation and Backfill** to read: "Backfill shall be uniformly tamped in 4-inch layers under and around the pipe for the full width of the trench and the full length of the pipe. Materials shall be sufficiently damp to permit thorough compaction, free of voids. Backfill shall be compacted to dry density equal to adjacent undisturbed soil and shall conform to adjacent grades."
2. Add the following to Standard Specifications Section **308-2.2 Trench Excavation and Backfill**:
   a) Flooding in lieu of tamping is not allowed without specific prior written approval of the Soils Engineer and the Park Projects Inspector.
   b) Under no circumstances shall the wheels of any vehicle not designed for the purpose of soils compaction be used to compact backfill.

3.03 **PIPE INSTALLATION:**

A. General: Add the following to Standard Specifications Section **308-5.2.1 Irrigation Pipeline Installation, General**:
1. Piping under existing pavement may be installed by jacking, boring, or hydraulic driving. However, no hydraulic driving is permitted under asphaltic concrete pavement.
2. Cutting or breaking of existing pavement is not permitted except as approved by Park Projects Inspector. When approved, all necessary repairs and replacements will be made at no additional cost to City.
3. Carefully inspect all pipe and fittings before installation, removing all dirt, scale and burrs and reaming; install pipe with all markings up for visual inspection and verification.
4. Contractor shall install concrete thrust blocking per the manufacturer's recommendations at all changes of direction and terminal points of pressure pipe.
5. Parallel lines shall not be installed directly over one another. Provide a minimum of 12" horizontal separation for all parallel lines.
6. For plastic-to-metal connections, work the metal connections first. Use a non-hardening pipe dope on all threaded plastic-to-metal connections, except where noted otherwise.
7. All piping under pavement shall be sleeved using schedule 40 PVC sleeves. Each line shall be separately sleeved.
8. Do not install multiple assemblies ("manifold") on plastic lines. Provide each equipment assembly (e.g. RCV, quick coupler, ball valve, head, backflow device) with its own connection to its service line.

B. Plastic Pipe: Add the following to Standard Specifications Section **308-5.2.3 Plastic Pipeline**:
1. Exercise care in handling, loading, unloading and storing plastic pipe and fittings, store plastic pipe and fittings under cover until ready to install; transport plastic pipe on a vehicle with a bed long enough to allow pipe to lay flat, avoid undue bending and any concentrated external load.
2. 360 applicators shall be used to apply primer and solvent on pipe sizes 2-1/2 inches and larger.

3.04 **BACKFLOW INSTALLATION:** Add the following to Standard Specifications Section **308-5.3 Installation of Valves, Valve Boxes, and Special Equipment**: Install backflow assemblies at locations approved in the field by the Park Projects Inspector and at heights required by local codes.

3.05 **VALVE AND VALVE BOX INSTALLATION:**

A. Valves:
1. Amend Standard Specifications Section **308-5.3 Installation of Valves, Valve Boxes, and Special Equipment** to read: Valves shall be the same size as the pipeline in which valves are installed unless otherwise specified on the Plans. Valves shall be installed a minimum of three feet in horizontal distance apart, each with its own connection to the pressure main line.
2. Amend Standard Specifications Section **308-5.3 Installation of Valves, Valve Boxes, and Special Equipment** to read: Install quick couplers and valve boxes per the Park and Recreation Department's standard details.
3. Add the following to Standard Specifications Section **308-5.3 Installation of Valves, Valve Boxes, and Special Equipment** to read: Valves shall be installed in shrub areas whenever possible. No valves or valve boxes other than quick coupler valves shall be installed within a designated athletic playing field.

B. Valve Boxes:
1. General: Valve boxes shall be installed with a minimum of 2" clearance between the box and all pipelines and valve components and/or special equipment within the box. Valve boxes found resting on either the valve, special equipment or pipelines shall be cause for rejection of the installation.
2. Uses:
   a) Concrete Valve Boxes:
      i) Rectangular: Unless noted otherwise on the Plans, each remote control valve, all wire splices and each master control valve shall be installed within a rectangular concrete valve box.
      ii) Round: Unless noted otherwise on the Plans, each quick coupler valve (except where located within the infield of a baseball/softball field shall be installed within a round concrete valve box.
   b) Plastic Valve Boxes:
      i) Rectangular: Unless noted otherwise on the Plans, each drip irrigation flush valve, and each air relief valve shall be installed within a rectangular plastic valve box.
      ii) Round: Unless noted otherwise on the Plans, each quick coupler valve located within the infield of a baseball/softball field shall be installed within a round plastic valve box.

3.06 **IRRIGATION HEAD INSTALLATION:** Amend Standard Specifications Section **308-5.4.1 Sprinkler Head Installation and Adjustment, General** to read: Irrigation heads shall be installed as designated on the Plans and per the Park and Recreation Department's standard details. Upon coverage testing of the system if 100% coverage is not afforded by the system as designed, additional heads shall be added as necessary to achieve 100% coverage. Up to 5% of the total number of heads in the system are to be added at no additional cost to City. If a greater number of heads is needed, cost shall be as negotiated by change order.

3.07 **CONTROLLER INSTALLATION:** Add the following to Standard Specifications Section **308-5.5 Automatic Control System Installation**:

A. Controller Installation: The controller location, as shown on the Plans, is diagrammatic. The final location of the controller(s) shall be as approved by the Park Projects Inspector before installation. If replacement of existing controller(s) is a part of the project, Contractor shall remove the existing controller(s) and replace with the replacement unit as specified. Contractor shall install all conduit runs, 120V wire and cable, and 24V control wire, *phone line, and controller communication cables* as necessary for a complete and operational system.

B. Controller Enclosure:
1. Conventional Type: *The controller shall be wall mounted within a LeMeur vandal* resistant enclosure, unless noted otherwise on Plans. Controller enclosure shall be located in shrub areas and/or adjacent to other hardscape items. Enclosure shall be painted with two coats of paint, color as approved; submit samples. A 4" thick concrete slab for maintenance access shall be provided, size approximately 15 sq. ft., line, grade and dimensions as directed by the Park Projects Inspector.
2. Central/Satellite Computer Type: Controller(s) shall be pedestal mount type, as indicated on the Plans, the entire unit being installed within a stainless steel Strong Box enclosure with a heavy duty watertight case and locking hinged cover.

C. Coordination of Controller Location with Various Service Connections: Contractor shall coordinate *the telephone service* and the electrical service with the approved controller location. Contractor shall verify the locations of 120V power, *communication and sensor cable lead-ins and telephone service* prior to installing controller(s) and shall coordinate final assembly mounting locations with the needed utilities. Contractor shall furnish and install grounding rods and ground wires for each controller. Ground rods shall be installed a minimum of eight feet from their respective controller housing and the ground wire run back to the controller.

D. Controller Connections : Contractor shall inspect, test, and certify all low voltage control wire, *communication cables*, splices and ground rods installations as applicable. Any repairs as necessary to provide properly operating wiring are to be made by Contractor at no additional cost to City. After repairs are satisfactorily completed, Contractor shall connect the ground wires to the ground rods and the controller(s). *Contractor shall connect the communication and phone cables to the appropriate controller assemblies. Contractor shall calibrate and address the phone link concentrator and satellite and shall connect the phone modems to the telephone service at both the satellite and Phone Link Concentrator assemblies.*

E. Controller Programming: Following establishment of the turf, the irrigation system shall be programmed to operate during the periods of minimal use of the Project area (i.e., 11:00 p.m. through 6:00 a.m.).

3.08 **WIRING:**

A. Wiring: Add the following to Standard Specifications Section **308-5.5 Automatic Control System Installation**:
1. All splice connections shall occur in a valve box. All wire runs between the valve and the controller shall be a continuous run with no splices unless noted otherwise on the Plans.
2. All low voltage wiring splices shall be made-up as soldered connections, wrapped with a minimum of two (2) layers of electrical tape and sealed with Scotch-coat. Scotch-lok, Uni-pack, Penn-tite, or other similar type connectors are not acceptable.

3.09 **FINISHING AND TESTING:** Amend Standard Specifications Section **308-5.6.2 Pipeline Pressure Test** to read: Pressure test the mains- minimum 2 hours at 150 PSI. Add the following to Standard Specifications Section **308-5.6.2 Pipeline Pressure Test**: Center-load all plastic pipe prior to pressure testing. The entire system shall be operating properly before any planting operations commence.

3.10 **COMPLETION CLEANING:** Add the following to Standard Specifications Section **308 Landscape and Irrigation Installation**: Upon completion of the Work, Contractor shall smooth all ground surfaces, remove excess materials, rubbish, debris, etc., sweep adjacent streets, curbs, gutters, walkways and trails, and remove construction equipment from the premises.

END OF SECTION

PLANTING

PART 1 - GENERAL

1.01 RELATED DOCUMENTS:

A. Standard Specifications: The provisions of the Standard Specifications shall apply except as modified herein.

B. Reference Standards: American Association of Nurserymen Standards.

1.02 SCOPE: The work of this Section shall consist of furnishing all labor, materials, equipment, appliances and services necessary for the execution and completion of all **Planting Work** as shown on the Plans and as described in the Specifications including, but not necessarily limited to, the following:

- Soil preparation;
- Finish grading *(as distinguished from fine grading per Section **02210 grading**)*;
- Planting trees;
- Guying and staking trees;
- Planting shrubs and groundcover;
- Hydroseeding turf;
- Soil erosion control;
- Maintenance;
- Plant establishment;
- Coordination with Work of other Sections;
- Testing;
- Clean-up;
- Replacement, Repairs, Guarantees and Warranty Work.

1.03 RELATED WORK:

Submittals	01300
Clear and Grub and Selective Demolition	02110
Site Grading	02210
Irrigation	02441
Electrical	16530

1.04 SOILS TEST: Contractor shall notify the Park Projects Inspector upon completion of *fine* grading and prior to commencement of soil preparation work. The Park Projects Inspector will obtain agronomic soils tests for all planting areas after completion of *fine* grading and prior to start of soil preparation work. Tests will be performed by an approved agronomic soils testing laboratory and will include a fertility and suitability analysis with written recommendations for soil preparation, planting backfill mix, auger hole requirements, and post plant fertilization program. The soils report recommendations will take precedence over the minimum amendment and fertilizer application rates specified minimums. Contractor shall allow a minimum two week period for the soils testing work commencing upon the Park Projects Inspector's acceptance of grade/ *the fine grading work per Section **02210 Grading***.

1.05 GUARANTEE: The guarantee requirements of the Special Provisions are supplemented as follows as such requirements pertain to the tree planting portion of the Work. All trees installed under the Contract shall be guaranteed against any and all poor, inadequate or inferior materials and/or workmanship for a period of one (1) year following the date the Project Notice of Completion is filed with the County Recorder. During the guarantee period, any trees found to be dead, missing, or in poor condition shall be replaced by Contractor within ten (10) days of written notification. Parks Project Inspector shall be the sole judge as to the condition of the trees. Replacement shall be made in accordance with City standards. Material and labor involved in replacing trees shall be provided by Contractor at no additional cost to City.

1.06 INSPECTIONS: Inspections will be required. Contractor shall contact the Park Projects Inspector as least 48 hours (2 working days) in advance of an anticipated inspection. An inspection will be required at each of the steps listed below:

A. *Fine Grade* Prior to Commencement of Soil Preparation : *Upon completion of fine grading and* prior to commencement of soil preparation, for acceptance of *fine grading work*/grade and taking of soils samples.
B. Finish Grade: Inspection of completed finish grading work following soil preparation work.
C. Plant Material: Inspection of plant materials upon delivery to the job site, but prior to planting.
D. Plant Locations: When container plants and/or bare root stock are spotted for planting, but before planting holes are excavated.
E. Completed planting: When planting and all other indicated or specified work has been completed.
F. Chemical Applications: During application of pre-emergent chemical.
G. Start of Plant Establishment: At the start of the Plant Establishment Period.
H. End of Plant Establishment: Prior to Final Acceptance of the Project for maintenance by City, the project will be inspected for end of Plant Establishment Period. Acceptance for maintenance will be confirmed in writing by the Parks Department Representative. Contractor shall remain responsible for maintenance until receipt of this written confirmation of City's acceptance of the Project for maintenance.

1.07 SUBMITTALS: The following written certificates are required to be submitted to the Park Projects Inspector upon delivery of the materials to the job site:

Total Quantity of commercial fertilizers, by type
Total Quantity of soil amendments and conditioners, by type
Total Quantity of seed, by type
Total Quantity of mulch
Total Quantity of iron sulphate

1.08 PLANT ESTABLISHMENT PERIOD: The length of the Plant Establishment Period shall be as specified in Section **6-7.4 Plant Establishment Period** of the Special Provisions; regarding length of plant establishment and criteria to start, see also Subsections **3.12 Maintenance and Plant Establishment** and **3.13 Start of Plant Establishment Period**.

PART 2 - MATERIALS

2.01 **GENERAL:** All materials shall conform with Section **212- Landscape and Irrigation Materials** of the Standard Specification except as modified herein.

2.02 **FERTILIZER, SOIL AMENDMENTS AND CONDITIONERS:** Add the following to Standard Specifications Section **212-1.2.3 Commercial Fertilizer**:

A. Plating Tablets: Tightly compressed long-lasting, slow-release fertilizer tablets weighing 21 grams, with a potential acidity of not more than 5 percent by weight and having an analysis of 20-10-5 derived from the sources listed in the following guaranteed analysis:

GUARANTEED ANALYSIS

Total Nitrogen (N). 20%
Derived from urea formaldehyde
7.0% water soluble nitrogen
13.0% water insoluble nitrogen

Available Phosphoric Acid (P_2O_5). 10%
Derived from urea formaldehyde

Soluble Potash (K_2O). 10%

Combined Calcium (Ca). 10%
Derived from calcium phosphates

Combined Sulfur (S) 10%
Derived from ferrous and potassium sulfates

Iron (expressed as elemental Fe). 10%
Derived from ferrous sulfate

B. Commercial fertilizer: Shall bear the manufacturer's guaranteed statement of analysis and shall meet the following minimum requirements: 16% nitrogen, 6% phosphoric acid, and 8% potash.

C. Organic Soil Amendment: Shall be type 1 organic soil amendment, wood based product, nitrogen stabilized, and free of foreign matter.

B. Soil Conditioners: Add to Standard Specifications, new Section as follows:

212-1.2.6 Inorganic Conditioners. Inorganic conditioners shall be agricultural grade gypsum, soil sulfer and iron sulfate. Iron sulfate shall be ferric sulphate or ferrous sulphate in pelleted or granular form containing not less than 18.5% iron, expressed as metallic iron, and shall be registered as an agricultural mineral with the State Department of Food and Agriculture in compliance with Chapter 5 "Fertilizing Materials", of Division 7 of the Food and Agriculture Code of California , commencing at Section 14501.

2.03 **HEADERS, STAKES AND TIES:** Add the following to Standard Specifications Section **212-1.5 Headers, Stakes and Ties**:

A. Headers: Standard Specifications Section **212-1.5.2 Headers and Stakes** replace with the following to read:

"Headers shall be Concrete Headers/Mow Curbing- Concrete shall be 5 sack mix with a maximum slump test of four inches (4"). Provide sufficient concrete forming and stakes (maximum 3' o.c.) to provide continuous line without waving."

B. Tree Stakes: Shall be straight-grained lodgepole pine, or City approved equal. Stakes shall be free from knots, checks, split, or disfigurements.

C. Tree Ties: Shall be made from tire casing, 22" long by 3/4" wide, fastened to tree stake with two galvanized 5d roofing nails each.

2.04 **HYDROSEEDING MATERIALS:**

A. Binding Agent: Shall be a dry powder organic concentrate, Ecology Controls "M-Binder" as available from Robinson Fertilizer Company, Anaheim, CA 714/632-9715 or City approved equal.

B. Fertilizers:
1. Controlled Release Fertilizer (CRF): Shall have a minimum analysis of 16-7-12 (+Iron), 9-12 month time release formulation, using resin coated prills, as manufactured by Scotts Chemical Co., (Local Manufacturer's Representative: Jack Wackerman, 761/757-2150) 1-800-492-8255, or City approved equal, and as available through Western Farm, Santa Ana, CA (714) 549-2871.
2. Single Super Phosphate: Shall have an analysis of 0-18-0, as manufactured by ???, or City approved equal.

C. Fiber Mulch: Shall be produced from cellulose such as wood pulp or similar organic material and shall be of such character that it will disperse into a uniform slurry when mixed with water. The fiber shall be of such character that when used in the applied mixture, an absorptive or porous mat, but not a membrane, will result on the surface of the ground. Materials which inhibit germination or growth shall not be present in the mixture.

D. Seed: Turf seed mix as specified.

E. Water: All water used for hydroseeding shall be potable domestic water. See General Provisions Section **7-8.5 Temporary Light, Power, and Water** regarding availability of water and temporary construction meter and charges for water drawn from City fire hydrants.

2.05 **JUTE NETTING:** Jute netting shall be new and shall be of uniform, plain-weave, flame-retardant mesh. The mesh shall be dyed green and shall be made from unbleached single jute yarn. The yarn shall be of loosely twisted construction and shall not vary in thickness by more than one-half its normal diameter. Jute netting shall be furnished in rolled strips and shall meet the following requirements:

Width- 48 inches, with a tolerance of one inch wider or marrower.
Minimum 78 warp ends per width of roll.
Minimum 41 weft ends per yard of length.
Weight shall average 1.22 pounds per linear yard, with a tolerance of 5 percent heavier or lighter.

2.06 **PLANTS:** Add the following to Standard Specifications Section **212-1.4 Plants** :

A. General: Add the following to sub-section **212-1.4.1 General**: All plants shall be true to name, with at least one of each bundle or lot tagged with the name and size in accordance with the American Association of Nurseryman Standards. In all cases, botanical names shall take precedence over common names. All plants and planting materials shall meet or exceed the specifications of Federal, State, and County Laws requiring inspection for plant disease and insect control.

B. Quality and Size:
1. Quality: All plant material shall comply with the definition for number one nursery stock per the current edition of "Horticultural Standards" as adopted by the American Association of Nurserymen.
2. Size: Add the following to Standard Specifications Sections **212-1.4.2 Trees** and **212.1.4.3 Shrubs**:
   a) All container plants supplied by Contractor shall be of the specified standard height and diameter set by the American Standard for Nursery Stock. The height of the trees shall be measured from the root crown to the last division of the terminal leader and the diameter shall be measured six (6) inches above the crown roots.
   b) All palm trees shall be of a minimum overall height of 8 to 12 feet as measured from the crown of the rootball to the tips of the fronds, or four feet of brown trunk whichever is greater.
   c) All container grown plants shall be the size(s) as noted on the approved plans, but in no case less than a minimum 15 gallon container size, with minimum caliper and height in accordance with the American Association of Nurseryman standards for container plants. Where substitution of bare root stock is approved by the Street Tree Inspector, bare root stock shall conform to the American Association of Nurseryman standards. Minimum caliper shall be two (2) inch diameter and minimum height shall be twelve (12) feet.

C. Bare Root Stock: Shall conform to the American Nurseryman's Association standards. Minimum caliper shall be two (2) inch diameter and minimum height shall be twelve (12) feet.

D. Cuttings: Modify Standard Specifications Section **212-1.4.6 Cuttings**: to read: All cuttings used on the project shall be fully rooted cuttings unless otherwise approved in writing by the Parks Department Representative.

2.07 **MULCH:** Shall conform with Standard Specifications Section **212-1.2.5 (a) Type I Mulch**

2.08 **TURF PLANTINGS:**

A. Seed: Add the following to Standard Specifications Section **212-1.3 Seed**:
1. Seeded Turf: For turf areas being planted solely from seed, use the following seed mix:

Turf Seed Mix	Proportion by weight	Purity	Germination
Perennial Rye (50% 'Caliente Fine', 50% 'Prelude')	60%	95%	90%
PJ Bluegrass (50% 'Rugby', 50% 'Parade')	10%	98%	80%
Un-Hulled Bermuda (Certified Arizona Common)*	30%	98%	85%

Seeding rate: 218 pounds per acre (5 LBS/ 1,000 SF)
*Note: For applications in May through September, use Hulled Bermuda.

2. Overseeding for Stolonized Turf Plantings: (for use during non-stolonizing months: November thru March). Where stolonizing of turf plantings is specified, and the installation is scheduled during non-stolonizing months, overseed the stolonized turf area with the following seed mix:

Annual Rye	100%	95%	90%

Seeding rate: ?? pounds per acre (? LBS/1,000 SF)

B. Sod: Turf sod shall be of the type noted on the plans. All sod shall be new, fresh, viable sod delivered in full pallots ready for installation.

C. Stolons:
1. Definitions: The standard unit of measurement for turf stolons shall be a bushel, defined as 1.24 cubic feet, loose packed and having a minimum "dry" weight of eight pounds net. Stolons are defined as fresh living sections of runners and stems of the turf species specified having nodes (joints) which will produce growth when properly planted and maintained.
2. Growing Conditions: Stolons shall be grown from high quality vegetative material in soil treated with appropriate state and federal regulatory agency approved pesticides/ herbicides for control of disease, insects and weeds. Stolons shall be produced in fields periodically inspected by the California Department of Food and Agriculture Nursery Section to insure high quality and freedom from diseases, insects and weeds according to the standards in effect in the current publication of "State of California Regulations for Nursery Inspection."
3. Product Handling: Stolons shall be cut to between one and four inches in length. Chaff, soil, or other inert materials shall not exceed eight percent (8%) by weight. When delivered to the job site, stolons shall be in corrugated containers, clean burlap bags or suitable plastic mesh bags. Stolons may be held on site for approximately twenty-four (24) hours if kept shaded, piled no more than two container units deep and kept continually saturated with water until planted.
4. Species and Application Rate: Stolons shall be 'Santa Ana' hybrid bermuda grass, applied at 33 bushels per acre (0.75 BU/1,000 SF)

PART 3 - EXECUTION

3.01 **GENERAL:** All Work shall conform with Section **308- Landscape and Irrigation Installation** of the Standard Specification, except as modified herein.

At Contractor's option, subject to the Park Project Inspector's acceptance of the material available and the appropriateness of the planting season, bare root stock may be substituted for the required 15 gallon and 24" box tree species if commercially available as bare root plantings and provided the corresponding minimum caliper and height requirements of Subsection **2.06 Plants**, *Subparagraph C. **Bare Root Stock*** above are met, all at no charge in contract price.

3.02 **WEED CONTROL MEASURES:** Upon completion of all *fine* grading work *per Section **02210 Grading***, and prior to soil preparation, perform weed control measures as follows:
1. Irrigate all areas designated to be planted for a minimum of 10 minutes per setting, two settings per day for seven days to germinate all weed seed possible.
2. Apply a contact weed killer and allow sufficient time to obtain complete kill of all weeds germinated.
3. Repeat step one above.
4. Repeat step two above.

3.03 **SOIL PREPARATION:** Add the following to Standard Specifications Section **308-2.3 Topsoil Preparation and Conditioning:**

A. Work Sequence: All *fine grading and mounding per Section 02210 Grading and* weed control measures shall be completed prior to soil preparation. Soil Preparation Work shall not commence until the agronomic soils test has been completed. Should 30 calendar days elapse between completion of soil preparation and commencement of planting, all areas shall be prepared again.

B. Excluded Areas: Planting areas with slopes 3:1 and steeper shall not be soil prepared. In lieu of soil preparation, such slopes will require fertilizer tablets for all plantings as specified below.

C. Soil Preparation: In all planting areas with gradients less than 3:1, areas to be soil prepared shall first be cross ripped to a minimum depth of 6" with tractor tines spaced at maximum depth of 6" with tractor tines spaced at maximum 18" on center. Following cross-rip operations, a layer of *soil amendments* shall be spread and rototilled into the soil to a minimum depth of 4 inches, or as recommended by the soils report, so that the soil shall be loose, friable, and free from rocks, sticks, and other objects undesirable to planting.

D. Amendment Application Rates : The following soil amendments shall be added per 1,000 square feet to all planting areas with gradients less than 3:1 (agronomic soil test recommendations shall take precedence where these minimum amounts are exceeded):
1. 6 cubic yards Type I organic soil amendment.
2. 15 pounds commercial fertilizer.
3. 100 pounds gypsum.
4. Soil sulfur per soils report.

3.04 **FINISH GRADING:** Contractor shall finish grade all planting areas, filling as needed or removing surplus dirt, raking to remove all rocks and debris over 1 inch in diameter, and floating to a smooth uniform grade. All areas shall slope to drain. Flow lines shall be established to roads, curbs, drainage swales and inlets, and/or sidewalks as shown on the Plans and as directed. All fill material placed within the top 12" from finish grade elevations in all planting areas shall be topsoiled.

All landscape areas shall be finished graded *(as distinguished from fine grading specified in Section **02210 Grading**)* to "dress out", maintain, and/or re-establish finish grades and flow lines as approved prior to amending the soil. Contractor shall call for inspection upon completion of finish grading work. Contractor shall not proceed with planting work until finish grades have been inspected and accepted by the Park Project Inspector.

3.05 **EROSION CONTROL:** Add new Section to the Standard Specifications:

"**308-4.9.6 Jute Netting** . All slopes areas exceeding 3:1 shall receive jute netting. Netting shall also be provided during the Plant Establishment Period, when and as directed by the Park Project Inspector, along flow lines and other locations where erosion is evident. Jute netting shall be installed loosely, up and down the slope. The installed netting shall fit the soil surface contour and shall be held in place by 9-inch long, 11-gage (minimum) steel wire staples driven vertically into the soil at approximately 24-inch spacing. Jute netting strips shall overlap along the sides at least 6 inches. Ends of strips shall be buried into the soil at least 6 inches. Lap all ends of rolls a minimum of 24"."

3.06 **INSPECTION OF CONTAINER PLANTS:** the root condition of plants furnished in containers will be checked by the Park projects Inspector by removal of the earth by the roots of not less than two plants nor more than 2% of the total number of plants of each species or variety from a single source and proposed for use in the Work. When container-grown plants are from several different sources, the roots of not less than 2 plants of each species or variety from each source may be checked by the Park Project Inspector at the Inspector's option. The selection of plants to be checked will be made by the Park Projects Inspector.

Care shall be exercised to avoid rendering plants unsuitable for planting by virtue of this inspection. However, all plants rendered unsuitable for planting shall be considered as samples, and replacements shall be provided at no additional cost to City. In case the sample plants are found defective, the entire lot or lots of plants represented by the defective samples will be rejected.

3.07 **PLANTING BACKFILL:**

A. Mixing: All backfill materials shall be bulk mixed, not individually mixed at each plant pit.

B. Proportions : Backfill for planting pits shall be enriched using the following blend per cubic yard (agronomic soil test recommendations shall be reviewed prior to soil mixing):
1. Container Plants:
   60% top soil — 3 lbs. gypsum
   40% Type I Organic Amendment — 2 lbs. iron sulphate
   2 lbs. commercial fertilizer
2. Bare Root Stock:
   10% wood shavings — 90% top soil
   fertilizer and soil conditioners as specified for container plants.

3.08 **PLANTING:**

A. Tree and Shrub Planting: Add the following to the Standard Specification Section **308-4.5 Tree and Shrub Planting**:
1. Soil surrounding planting pit shall be in a friable condition and moist to a depth of 8".
2. Backfill using specified soil mix to within 8" of finish grade. At this depth, place the plant fertilizer tablets Agriform 20-10-5, 21 grams each, or City approved equal. A minimum of 1 tablet for 1 gallon, 3 tablets for 5 gallons, 5 tablets for 15 gallons, and 8 tablets for a 24" box. Complete backfilling to finish grade.
3. Trees)other than relocated palms) shall be planted at such a depth that the crown roots bear the same relative position to finish grade as the crown roots did in the soils where the trees were grown. Backfill after planting shall be compacted carefully into place without injuring the roots of the tree or breaking up the ball of earth surrounding the roots.

B. Groundcover and Vine Planting: Add the following to Standard Specifications Section **308-4.7 Groundcover and Vine Planting:**
1. On slopes exceeding 3:1 ratio,apply 5 gram Agriform tablets, one per plant in lieu of soil preparation work.
2. Mulch and fertilizer groundcover areas using 1.5 cubic yards of wood shavings and 5 lbs. of the specified commercial fertilizer per 1,000 square feet. Repeat fertilization at 30 day intervals throughout the duration of the contract up to 4 applications, after which decrease frequency to once every 90 days.
3. All groundcover and bare dirt areas shall be treated with a pre-emergent chemical (subject to approval by the Park Project Inspector prior to application). Chemicals shall be applied by a licensed Pest Control Agent. This treatment shall be applied at the following times during the Contract: a) before planting, b) at beginning of Plant Establishment Period, c) at end of Plant Establishment Period. The Park Projects Inspector, (909) 715-3469, shall be given a minimum of 48 hours (2 working days) notice prior to each application. No chemicals shall be applied other than in the presence of the Inspector.

3.09 **TREE STAKING:** Amend the Standard Specifications Section **308-4.6.1 Method "A" Tree Staking** and **308-4.6.2 Method "B" Tree Staking** to read: Stake trees in accordance with the Park and recreation Department's standard detail.

3.10 **TURF PLANTING:** Add the following to Standard Specifications Section **308-4.8.2, (b) Method "B"**: Turf planting shall be performed by either hydroseeding, sodding or stolonizing as indicated on the Plans, or, if not noted, as suitable for the species of turf specified and as acceptable to the City:

A. Pre-moistening: All areas to be either sodded, stolonized or hydroseeded shall be moistened to a depth of six inches just prior to application.

B. Hydroseeding:
1. Mixing of hydroseed slurry:
   a) Mixing shall be performed in a tank, with a built-in continuous agitation and recirculation system of sufficient operating capacity to produce a homogeneous slurry of fiber, M-Binder, seed, fertilizer and water in the following designated unit proportions:

Fiber Mulch:	1,500 lbs./acre
Fertilizers:	
CRF	870 lbs./acre (20#/1000 SF)
Single superphosphate	200 lbs./acre (4 1/2#/1000 SF)
Seed:	as specified in Subsection **2.08 Turf Seed** above
Binding Agent:	100 lbs./acre (use on all slopes 5:1 and steeper)
Water:	3,000 gal./acre (maximum)
Agricultural Grade Gypsum:	500 lbs./acre

   b) With agitation system operating at part speed, water shall be added to the tank, good recirculation shall be established. Materials shall be added in such a manner that they are uniformly blended into the mixture in the following sequence (assumes a nominal 1500 gallon tank):
   c) When tank is 1/3 filled with water:
      Add binding agent- 1/2 acre requirement.
      Add 5- 50 pound bales of fiber mulch.
      Add seed- 1/2 acre requirement.
      Add fertilizer- 1/2 acre requirement.
   d) Agitate mixture at full speed when the tank is half-filled with water.
   e) Add remainder fiber mulch requirement, 10 bales, before tank is 3/4 full. Add remainder fertilizers, seed and gypsum. Slurry distribution should begin immediately.
2. Application: Hydroseed slurry shall be applied under high pressure evenly and result *in a uniform coat on all areas to be treated. Care shall be exercised to assure that* plants in place are not subject to the direct force of the application. Slurry shall be immediately removed from walks, structures, plants, etc., that are inadvertently sprayed.
3. Clean-up: The slurry shall not be sprayed on non-designated areas. Any slurry spilled or sprayed into areas other than those designated to receive spray shall be cleaned up at Contractor's expense to the satisfaction of the Park Department Representative.

C. Sodding: All areas to receive sod shall be Finish Graded prior to commencement of sodding. Immediately prior to laying sod, all areas shall be irrigated to molsten the soil as specified above. Rooting agent shall be applied per the written recommendations of the Sod Grower. Contractor shall provide a copy of such recommendations to the Park Projects Inspector prior to installation of the sod. Lay sod in parallel rows with a running bond pattern using uniformly sized strips of sod. Use whole pieces wherever possible. Lay sod smooth, with tight joints, no gaps greater than 1/8" all around to allow for proper spray pattern and smooth pop-up and retract operation. Immediately following completion of sodding operations, irrigate as necessary.

D. Stolonizing:
1. Pre-fertilization: Immediately prior to planting turf, all areas to receive stolons shall be pre-fertilized, evenly broadcasting 10 pounds per thousand square feet of commercial fertilizer.
2. Mechanical Planting: Stolons shall be planted within 24 hours of delivery to the job site. The stolons shall be pressed into the friable, damp soil in such a manner as to bury approximately 75% of the stolons to a depth of 1/2" to 1 1/2". Stolons thus planted shall be rolled immediately thereafter to assure intimate contact between soil particles and the stolons. *For planting large areas (in excess of 10,000 SF), mechanical stolon planters* such as the Cal-Turf stolon roller shall be employed. In smaller areas, stolons may be scattered on the prepared surface and topdressed with approximately 1/4" of Type I organic material, then rolled. It is not necessary to topdress stolons which have been properly planted with suitable mecahnical equipment.
3. Hydraulic Installation: As an alternative to mechanical planting, at Contractors' option, stolons may be hydraulically planted using 1800 lbs. of wood cellulose fiber, 100 lbs. of M-binder, 300 lbs. of 21-8-8 (+iron) fertilizer and 175 bushels of stolons per acre. Mixing shall be in a tank with built in continuous agitation recirculating system of sufficient capacity to produce homogeneous slurry mixture in designated unit proportions, and a discharge system which will apply the slurry mixture at a continuous and uniform rate. Wood fiber shall contain a green fugitive dye as an application indicator.
4. Watering: At no time either during or after planting shall stolons be subject to dry conditions. freshly planted stolons shall immediately be irrigated to a depth of 8" and shall be kept moist at all times thereafter for a period of a minimum ten to twenty days depending upon weather conditions, until new plantings are sufficiently rooted and well established to withstand less frequent irrigation. Time intervals between beginning of planting operations and commencement of irrigation shall be kept to a minimum and shall not exceed the following:

Ambient Air Temperature	Maximum Allowable Time
100 F	15 minutes
75 F	60 minutes

After the first irrigation, water shall be applied as often and in sufficient amounts as conditions may require, *to keep the soil wet above, around and below the stolons.*

E. Replanting : At the point that the turf is generally showing signs of establishment, all bare spots shall be replanted within 10 days by Contractor, either with seeds, stolons or sod as designated by City. Contractor shall be responsible for all replanted turf areas for as long after replanting as is necessary until acceptable germination/ rooting and establishment is realized and approved by the Parks Department Representative.

3.11 **WATERING:** Add the following to Standard Specifications Section **308-4.9.5 Watering** :

A. Responsibility: It shall be Contractor's responsibility to maintain a balanced watering program to ensure proper growth until Final Acceptance of the Work.

B. Initial Watering: Immediately after planting, apply water to each plant. Apply water in a moderate stream in the planting hole until the material about the roots is completely saturated from the bottom of the hole to the top of the ground.

C. Ongoing Watering: Apply water in sufficient quantities and as often as seasonal conditions require to keep the planted areas moist at all times, well below the root system of plants.

D. Irrigation:
1. Contractor shall properly and completely maintain the irrigation system. A balanced water program shall be maintained to ensure proper germination and growth until Final Acceptance of the Work. Plants that cannot be watered sufficiently with the irrigation system shall be watered by means of a hose.
2. All controllers are to have each station individually adjusted on a weekly basis. System shall be set considering the application rate each area is capable of receiving. The system shall operate on short intervals, with the cycle repeating at a later time to reduce runoff.

3.12 **MAINTENANCE AND PLANT ESTABLISHMENT:** Amend the first sentence to Standard Specifications Section **308-6 Maintenance and Plant Establishment** to read: "Contractor shall maintain **all areas within the Work Limits of this Contract** on a continuous basis... until Final Acceptance".

3.13 **START OF PLANT ESTABLISHMENT:** Add the following to Standard Specifications Section **308-6 Maintenance and Plant Establishment**:

A. Criteria for Start of Plant Establishment Period:
1. The Plant Establishment Period shall not start until all elements of the Project that impact the landscape are completed in accordance with the Contact Documents. Projects will not be segmented into phases.
2. Permanent power to remote controllers shall be established.
3. The Plant Establishment Period for the Project shall not begin until after the first mowing of the newly planted turf areas. For Plant Establishment purposes "First Mowing" is defined as the first mowing after the point in time that a minimum of 85% of the turf area has attained a minimum height of 2". Until the above specified percentage of turf area is established and mown, Contractor shall mow as necessary to maintain those portions of turf exceeding 2" at the mowing height of 1 1/2 inches. At no time shall any *turf exceed 3" in height.*
4. Written acceptance of the Parks Department Representative must be obtained to start the Plant Establishment Period.
5. If the project maintenance fails to continuously meet standards required, the Plant Establishment Period "day count" will be suspended and will not recommence until Contractor has corrected all deficiencies.

3.14 **MAINTENANCE TASKS:** Add the following to Standard Specifications Section **308-6 Maintenance and Plant Establishment:**

A. General : During the contract period provide all watering, weeding, mowing, fertilizing and cultivation and spraying necessary to keep the plants and turf in a healthy growing condition and to keep the planted areas neat, edged, and attractive. All shrubs planted by Contractor shall be pinched and pruned as necessary to encourage new growth and to eliminate rank sucker growth. Old wilted flowers and dead foliage shall be immediately pinched or cut off. Do not prune trees without written approval of the Parks Department Representative.

B. Iron Chlorosis: After planting and during the Plant Establishment Period, in the event that any plantings exhibit iron chlorosis symptoms, apply FE 138 Geigy or equivalent at manufacturer's recommended rates.

C. Replacement Plantings: During the Plant Establishment Period, should the appearance of any planting installed by Contractor indicate weakness, that plant shall be replaced immediately with a new, healthy plant. At the end of the Plant Establishment Period, all plant materials shall be in a healthy, growing condition and spaced as indicated on the plans.

D. Fertilization: Contractor shall apply commercial fertilizer to all turf areas at a rate of 10 pounds per 1,000 square feet, and all groundcover areas at a rate of 5 pounds per 1,000 square feet, at 30-day intervals, for 3 applications as a minimum, above and beyond the original soil preparation application.

E. Planting Establishment: All planting areas that do not show a prompt establishment of plant material, and areas where plant material is missing, shall be replanted at 10-day intervals until the plant material is established. For turf sod plantings, sod shall exhibit sufficient root growth knitting into the subgrade such that the sod can no longer be removed by hand. If a good rate of growth has not been demonstrated within 30 days of first planting/hydroseeding, Contractor shall be responsible to determine the appropriate horticultural practices necessary to obtain good growth. Contractor shall obtain agronomic soils testing of all areas not showing good growth and shall provide copies of the test results to the Parks Department Representative to verify the appropriateness of all maintenance work performed. If additional soil admendments are needed, up to a maximum 25% beyond the application rate specified, such amendments shall be provided by Contractor at no additional cost to City.

F. Grading and Drainage: During the Plant Establishment Period all flow lines shall be maintained to allow for free flow of surface water. Displaced material which interferes with drainage shall be removed and placed as directed. Low spots and pockets shall be graded to drain properly. Jute netting shall be installed at flow lines and other locations where erosion is evident, when directed by the Park Projects Inspector.
1. Damage to planting areas shall be repaired immediately and throughout the Plant Establishment Period. Depressions caused by vehicles, bicycles, or foot traffic shall be filled and leveled. Replant damage areas.
2. All paved areas shall be washed and maintained in a neat and clean condition at all times.
3. All subsurface drains and inlets shall be periodically cleared of debris, leaves and trash and flushed with clear water to avoid build up of silt and debris.
4. Debris and trash shall be removed from the site daily.

G. Disease and Pest Control: Throughout the Plant Establishment Period, all plants shall be maintained in a disease and pest free condition. A licensed pest control operator shall be retained by Contractor to recommend and apply all pesticides, herbicides, and fungicides. Exterminate gophers, moles, and all other rodents, and repair damage.

3.15 **END OF PLANT ESTABLISHMENT PERIOD:** Add the following to Standard Specifications Section **308-6 Maintenance and Plant Establishment**:

A. Request for Inspection: When Contractor believes that the Plant Establishment Period is complete and the Project is ready for Final Acceptance, Contractor shall request inspection of the project. The Parks Project Inspector will inspect the Project for Final Acceptance. Deficiencies noted during inspection shall extend the Plant Establishment Period until all are corrected.

B. Established Plantings: All planting areas shall show a good rate of growth and shall be well established "filled in" plantings free of voids. Bare areas will be unacceptable. Contractor shall provide sod or plantings from flats as necessary to fill in all bare areas. Such sod or plantings shall be planted a minimum of 10 days prior to the end of the Plant Establishment Period and shall have roots "knit-in" to the native soil.

C. Written Acceptance: Final acceptance and assumption of maintenance responsibilities by City shall occur only upon the Parks Department Representative's written acceptance of the Project for maintenance by City.

3.14 **CLEAN UP:** Upon completion of the Work, Contractor shall smooth all ground surfaces; remove excess materials, rubbish, debris, etc.; sweep adjacent streets, curbs, gutters; wash down all walkways, and trails; and remove construction equipment from the premises.

END OF SECTION

LICENSED LANDSCAPE ARCHITECT
Richard W. Krumwiede
2834
Signature
Renewal Date 7-31-02
Date 11-7-00
STATE OF CALIFORNIA

ARCHITERRA
DESIGN GROUP
LANDSCAPE
ARCHITECTURE
SITE PLANNING
10630 Town Center Dr., Suite 128
Rancho Cucamonga, CA 91730
(909) 484-2600
fax (909) 484-2802

Richard Krumwiede
CA Lic. #2834 AZ Lic. # 29115 NV Lic. # 446

PC-4298-M

MARK	REVISIONS	APPR.	DATE

DESIGNED BY J.R.G. DRAWN BY J.R.G. CHECKED BY J.A.F.

CITY OF RIVERSIDE
PUBLIC WORKS DEPARTMENT

APPROVED BY	DATE	BY
PRINCIPAL ENGINEER	12/1/2000	
PARK DEPARTMENT	11/08/00	
TRAFFIC DIVISION		
DEPUTY P. W. DIRECTOR	12/4/00	TRB

APPROVED BY Richard Mc Grath
PUBLIC WORKS DIRECTOR
DATE 12-4-2000

IRRIGATION & PLANTING SPECS
ALESSANDRO BLVD.
MEDIAN ISLANDS EAST &
WEST OF NORTHROP DR.

HORIZ. SCALE: N.T.S. VERT. SCALE: N.T.S.

ACCOUNT NO.
R-3527-L
S-2
SHEET 12 OF 12
DATE: 10/9/00