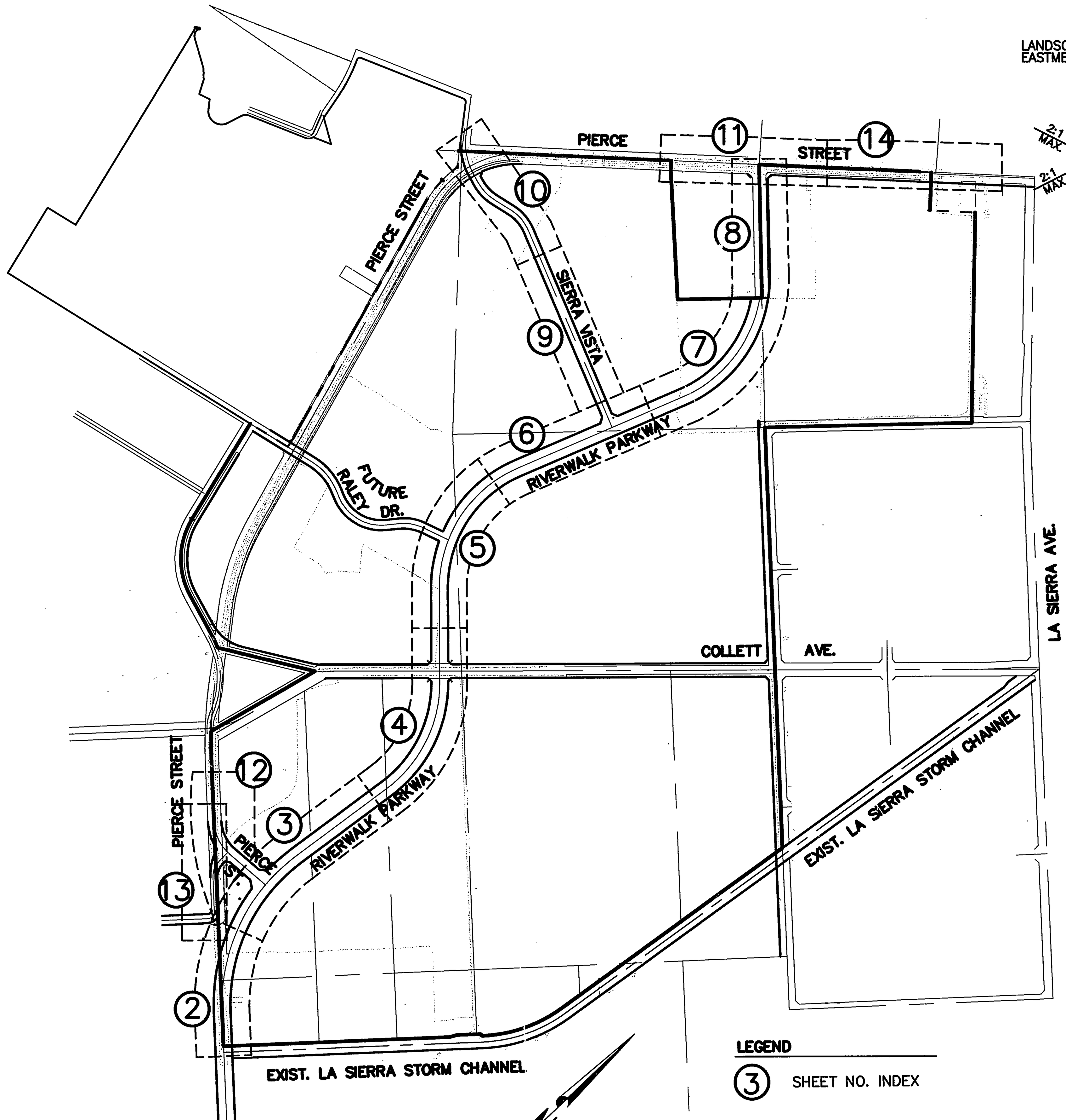

INDEX MAP
N.T.S.

LEGEND

(3) SHEET NO. INDEX

TRAFFIC & STREET NAME SIGN SCHEDULE		
(A)	RIVERWALK PARKWAY PIERCE ST. (SOUTH END)	4100 (N) 4100 (N)
(B)	RIVERWALK PARKWAY COLLETT AVE.	4300 (N) 11500 (E)
(C)	RIVERWALK PARKWAY RALEY DR.	4400 (N) 11600 (W)
(D)	RIVERWALK PARKWAY SIERRA VISTA	4600 (N) 11400 (W)
(E)	RIVERWALK PARKWAY PIERCE ST. (NORTH END)	4900 (N) 11175 (E)

INSTALL PER CITY OF RIV. STDS. 662 & 666.

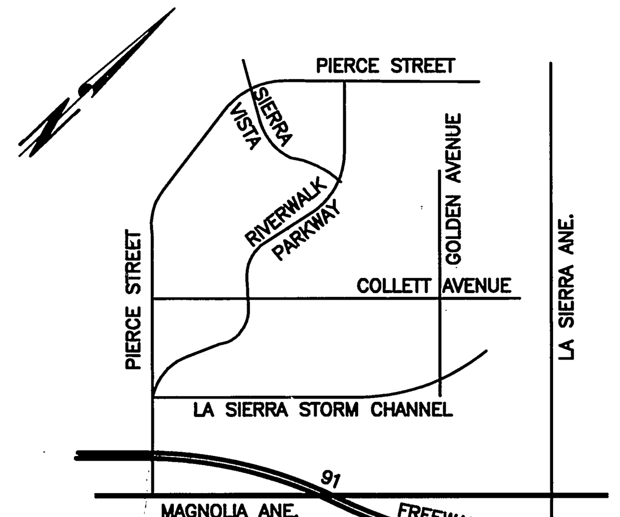

VICINITY MAP
N.T.S.

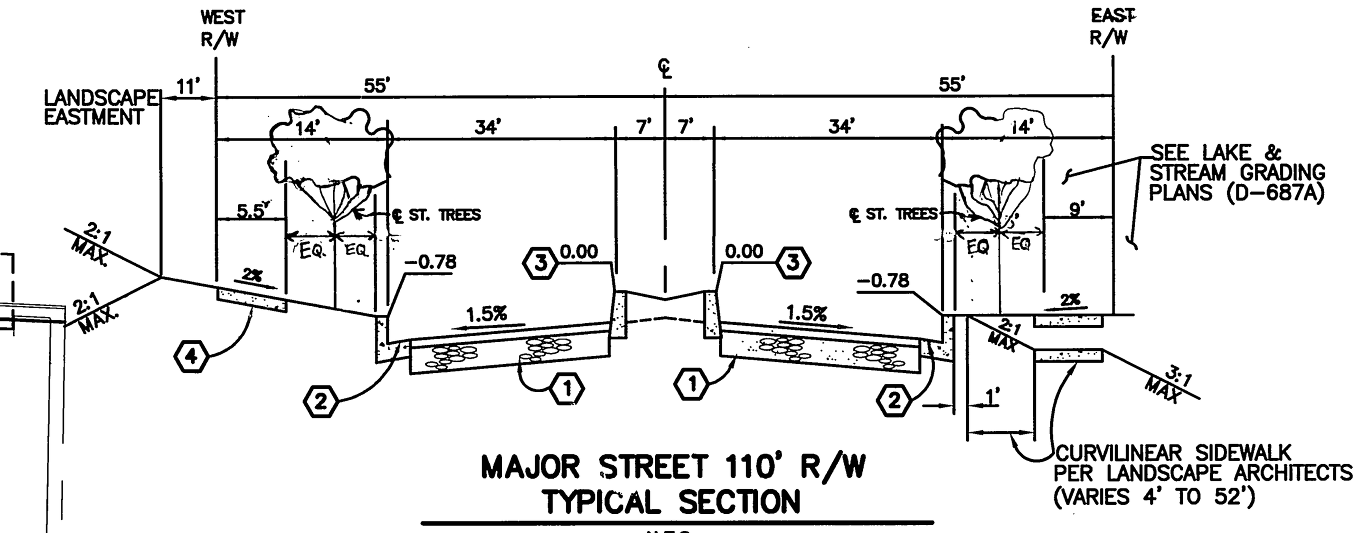

MAJOR STREET 110' R/W TYPICAL SECTION
N.T.S.

CONSTRUCT______ "A.C. OVER______" C.A.B.
PER S.R.____, R=______, T.I.= 9.0

RIVERWALK PARKWAY 10+00 TO 76+06

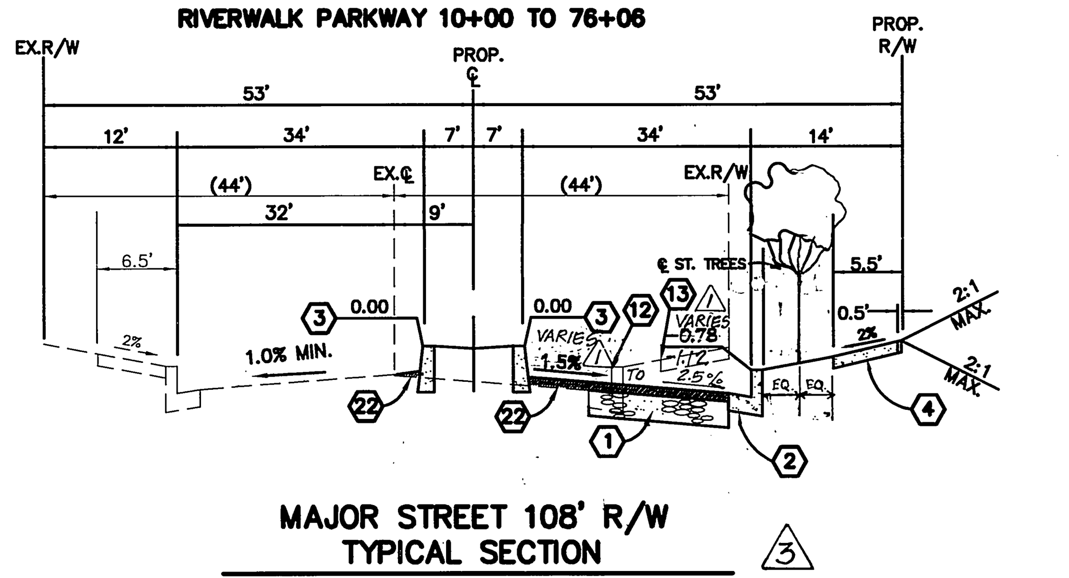

MAJOR STREET 108' R/W TYPICAL SECTION (3)
N.T.S.

CONSTRUCT 6 "A.C. OVER 12" C.A.B.
PER S.R. 1586, R= 31, T.I.= 9.0

RIVERWALK PARKWAY STA. ~~76+06~~ 77+73 TO PIERCE ST.

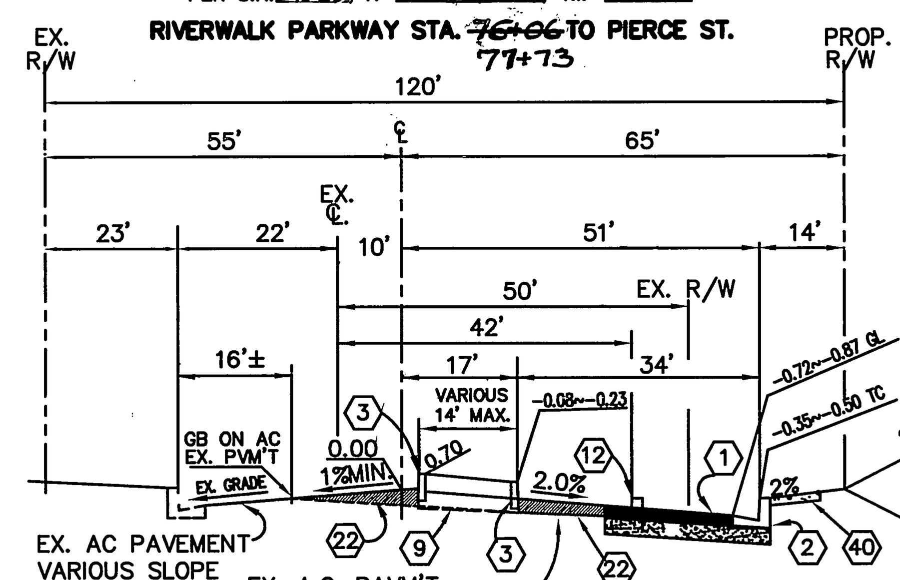

MAJOR STREET 120' R/W TYPICAL SECTION (3)
N.T.S.

CONSTRUCT 6 "A.C. OVER 12" C.A.B.
PER S.R. 1586, R= 31, T.I.= 9.0

PIERCE STREET E. OF RIVERWALK BLVD.

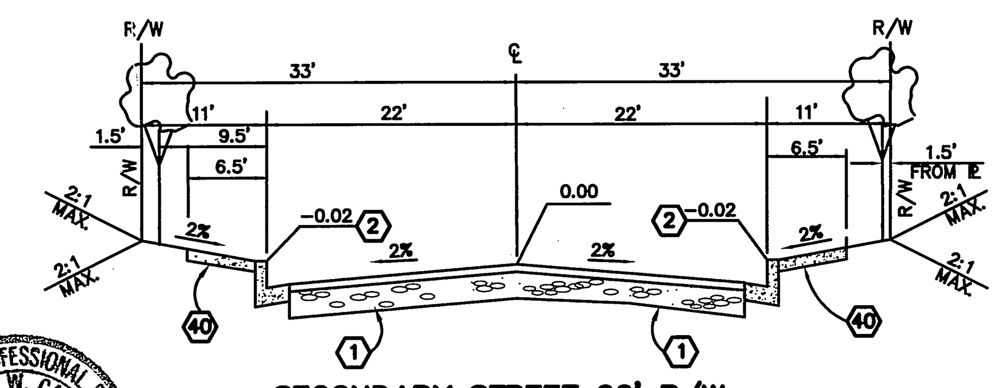

SECONDARY STREET 66' R/W TYPICAL SECTION
N.T.S.

CONSTRUCT______ "A.C. OVER______" C.A.B.
PER S.R.____, R=______, T.I.= 7.0

PIERCE STREET

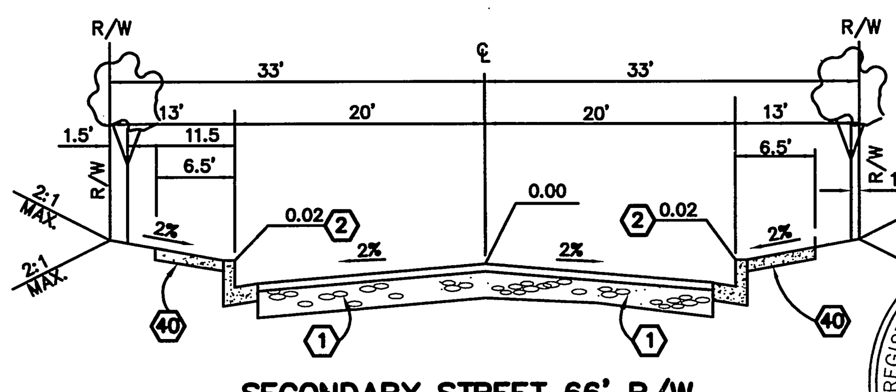

SECONDARY STREET 66' R/W TYPICAL SECTION
N.T.S.

CONSTRUCT______ "A.C. OVER______" C.A.B.
PER S.R.____, R=______, T.I.= 7.0

SIERRA VISTA STREET

GENERAL NOTES FOR STREET TREE PLANTING

1. All related work shall conform to the City of Riverside Park and Recreation Department Standards and City of Riverside Street Tree policies.
2. When calling for inspections contact the Street Tree Inspector a minimum of 48 hours in advance at (909) 351-6126 to schedule an inspection. A Field Notice will be issued as written approval for each stage of inspection. A verbal approval will not be acceptable. Inspections are required:
   a. After completion of final grading of the lots and when all utility services and sewer lateral have been marked, but prior to digging plant pits, all final street tree locations are to be spotted in the field by the Street Tree Inspector;
   b. while digging plant pits and planting/relocating trees;
   c. After planting and all other indicated or specified work has been completed, for start of maintenance;
   d. At end of the maintenance period, the contractor/developer shall call the Street Tree Inspector at (909) 351-6126 for a final acceptance inspection in order to be released from maintenance, Developers bonds will not be released until after receipt of written notification from the City that the trees pass final inspection and the Park and Recreation Department is assuming maintenance responsibilities;
3. All street trees are to be planted prior to occupancy.

* GENERAL NOTES FOR STR. TREE PLANTING CONT. ON SHT. 2

CONSTRUCTION NOTES

1. CONSTRUCT A.C. OVER CRUSHED AGG. BASE PER TYP. SECTIONS
2. CONSTRUCT 6" CURB (TYPE I) PER CITY STD. DWG. NO. 200
3. CONSTRUCT 8" CURB (TYPE II) PER CITY STD. DWG. NO. 200
4. CONSTRUCT PROPERTY LINE SIDEWALK PER CITY STD. DWG. NO. 325.
5. CONSTRUCT WHEELCHAIR RAMPS PER CITY STD. DWG. NO. 304 TYPE I.
6. INSTALL 2"x6" REDWOOD HEADER
7. CONSTRUCT 6" A.C. BERM PER CITY STD. DWG. NO. 250 (TYPE I).
8. CONST. DRIVEWAY APPROACH (TYPE CURB-I) PER CITY STD. DWG NO. 302, "A" & "B" AS NOTED.
9. REMOVE EXIST. A.C. PAVEMENT.
10. CONSTRUCT BARRICADE PER CITY STD. DWG. NO. 180.
11. REMOVE EXIST. DRIVEWAY.
12. REMOVE EXIST. CURB & GUTTER.
13. REMOVE EXIST. SIDEWALK.
14. RELOCATE EXSITING STREET LIGHT.
15. REMOVE EXIST. TREES. (NOTE: STREET TREE REMOVAL PERMIT REQUIRED; SEE GENERAL NOTES FOR STREET TREE PLANTING, NOTE #6)
16. RELOCATE EXSITING POWER POLE BY OTHERS.
17. REMOVE EXISTING C.L. FENCE.
18. F.H. TO BE SALVAGED; BY CITY FORCES.
19. REMOVE EX. A.C. BERM.
20. REMOVE/RELOCATE EX. TRAFFIC SIGN.
21. RELOCATE EXIST. TRAFFIC SIGNAL.
22. VARIABLE THICKNESS A.C. OVERLAY.
23. REMOVE EXIST. (AS NOTED)
24. ADJUST EXIST. MH/UTLITY VAULT TO GRADE (AS NOTED).
25. PROTECT EXIST. UTILITIES ON SITE.
26. RELOCATE OR REMOVE EXISTING UTILITY FACILITY BY OTHER (AS NOTED)
27. INSTALL CROSS GUTTER AND SPANDREL PER CITY STD. DWG. NO. 220
28. CONSTRUCT WHEEL CHAIR RAMP PER CITY STD. DWG. NO. 304, TYPE II
29. BUILD A.C. SWALE PER DETAIL ON SHEET 3
30. CONST. CATCH BASIN PER CITY STD. DWG. NO. 405, SIZE AS NOTED.
31. CONSTRUCT 6" CURB (TYPE II) PER CITY STD. DWG. NO. 200
32. INSTALL R10 (RT) SIGN PER CITY STD. DWG. NO. 666
33. INSTALL R1 STOP SIGIN PER CALTRANS STD.
34. CONST. DRIVEWAY APPROACH (TYPE PL-II) PER CITY STD. DWG NO. 302, "A" & "B" AS NOTED.
35. RELOCATE PALM TREES AS SHOWN ON PLANS & PROVIDE AUTOMATIC IRRIGATION SYSTEM. (NOTE: STR. TREE RELOCATION PERMIT REQUIRED SEE GENERAL NOTES FOR STREET TREE PLANTING, NOTE #6)
36. CONST. 6" CONCRETE DRIVEWAY.
37. RELOCATE EXIST ELECTRICAL FACILITIES PER CITY OF RIVERSIDE PUBLIC UTILITES DWG UOL5-604745.
38. CONSTRUCT BROOKS PRODUCTS 24"X24" V=36" CATCH BASIN WITH STEEL TRAFFIC GRATE DWG NO. 2424
39. CONST. CATCH BASIN PER CITY STD. DWG. NO. 407, SIZE AS NOTED.
40. CONSTRUCT CURB SIDEWALK PER CITY STD. DWG. NO. 325.
41. CONSTRUCT "RIGHT TURN ONLY" SIGN PER CAL TRANS STANDARD R41
42. WATER VALVE COVER TO BE ADJUSTED TO GRADE(BY CITY FORCES).
43. CONSTRUCT MODIFIED UNDER SIDEWALK DRAIN PER CITY STD. DWG NO. 411, W = 4'
44. CONSTRUCT PROPERTY LINE AC SIDEWALK PER MODIFIED RIV. STD DWG. NO. 325.
45. REMOVE EXISTING WHEELCHAIR RAMP.
46. SEAL EXISTING CATCHBASIN.

(6) 53. CONST. 9" P.C.C. WITHOUT REINFORCEMENT OVER 12" AGGREGATE BASE
(6) 54. CONST. 10' WIDE CURB SIDEWALK PER CITY STD. DWG. NO. 325
(6) 55. REMOVE EXIST. CURB AND SIDEWALK.
(6) 56. INSTALL BUS STOP SIGN PER RTA STD.
(6) 57. INSTALL BUS SHELTER PER RTA. STD.
(2) 47. CONST. WHEELCHAIR RAMPS PER CITY STD. DWG. NO. 304, TYP III.
(4) 48. CONST. DRIVEWAY APPROACH (TYPE CURB-II) PER CITY STD NO. 302, A & B AS NOTED.
(5) 49. CONSTRUCT 4' WIDE PRIVATE PCC SIDEWALK
(5) 50. CONSTRUCT 1'-4' HIGH RETAINING WALL PER CITY STD DWG. 707 (BY SEPARATE PERMIT)
(5) 51. INSTALL 36" HIGH TUBULAR STEEL FENCE (OR EQUIVALENT)
(7) 58. RELOCATE EXIST. STREET LIGHT (BY OTHERS)
(7) 59. CONSTRUCT 6' WIDE MEANDERING SIDEWALK PER CITY STD. DRWG NO. 325 (MODIFIED W=6') (7)

LEGEND

REMOVE EX. A.C. PAVEMENT
VARIABLE THICKNESS A.C. OVERLAY

GENERAL NOTES

1. It shall be the responsibility of the contractor to clear the right of way in accordance with the provisions of law as it affects each utility including irrigation lines and appurtenances and at no cost to the City.
2. Construction shall be in accordance with the City of Riverside Dept. of Public Works, Standard Drawings, its Supplemental Notes, and the Standard Specifications for Public Works Construction, Current Edition.
3. Trim edge of existing pavement where new pavement joins to a smooth, straight line. Construct match-up paving as shown on plan and overlay paving as directed in the field to produce a smooth section.
4. Construct driveway approaches per Std. Dwg. 302. Exact size and location to be staked by the Private Engineer prior to construction of the curb and gutter and as approved by the Traffic Engineer.
5. The developer and/or contractor shall contact the street division (351-6127) to pick up any existing standard 180 barricades that are being removed. The City's inspector will make the final determination on whether a barricade can be relocated.
6. The subdivider shall arrange for a soil test to be made by a soils engineer after the streets have been prepared to rough grade and prior to curb and gutter construction. Depth of base material and A.C. paving shall be determined by the City of Riverside design standards and test procedures.
7. All flagged elevations shall be staked in the field by the private engineer.
8. The private engineer signing these plans is responsible for assuring the accuracy and acceptability of the work hereon. In the event of discrepancies arising during construction, the private engineer shall be responsible for determining an acceptable solution and revising the plans for approval by the City.
9. The developer shall be responsible for preserving or re-establishing and referencing survey monuments destroyed, disturbed or buried as a result of construction shown hereon.
10. On all areas within public right of way where the fill is one (1) foot or greater, a letter will be required from the soils engineeer, certifying the compaction of the fill below subgrade, prior to issuance of the Construction Permit/Cut Sheets.
11. All traffic signs shall be installed prior to opening the streets to traffic.
12. See City of Riverside Public Utilities Approved DWG UOL5-604745 for quantity & location of required Street Lights.
13. Notice to contractor. The existence and location of any underground utility pipes or structures shown on these plans were obtained by a search of the available records. To the best of our knowledge there are no existing utilities except as shown on these plans. The contractor is required to take precautionary measures to protect the utility lines shown and any other lines not of record or not shown on these plans.
14. Contractor agrees that he shall assume sole and complete responsibility for job site conditions during the course of construction of this project, including safety of all persons and property; that this requirement shall apply continuously and not be limited to normal working hours; and that the contractor shall defend, indemnify and hold the owner and the engineer harmless from any and all liability, real or alleged, in connection with the performance of work on this project, excepting for liability arising from the sole negligence of the owner or engineer.
15. Any traffic control striping obliterated and/or badly worn during construction shall be restored by the contractor within five days after notification from the City Inspectors.
16. The contractor shall call in a location request to Underground Service Alert (USA), Phone No. 1-800-227-2600, two working days before digging. No construction permit will be issued by the Public Works Department involving excavation for underground facilities unless the applicant has been provided an inquiry identification number by U.S.A.
17. Quantities shown are for information only and the City of Riverside is not responsible for their accuracy.
18. In pavement overlay areas, distressed existing pavement shall be removed and replaced as directed by the inspector prior to overlaying with A.C. paving.
19. The contractor shall coordinate trenching for cable television with other trenching within the project.
20. Final striping for traffic control and/or pavement marking to be the responsibility of the developer.
21. No person shall perform any construction activity or install any objects within the public right-of-way or easements of the City of Riverside without a valid Construction Premit or, a Street Opening Permit or an Encroachment Permit issued by the City's Public Works Department.
22. Street improvement work that will cause damage to the detector loop(s) shalinot be perform until traffic signal maintenance personnel have been notified and the necessary timing adjustments are made to maintain signal operation. Reference Traffic Signal Plans (X-476A, -480A, -506, -507, -508) Striping/Signing Plans (XL-441).
23. Contact the Public Utilities Electric Department ninety (90) days prior to construction to allow the department to prepare Electric Utility Relocation & Design Plans for Bidding & Construction purposes. Contact Julian Cardenas @ (909) 826-5937.

AS BUILT

REGISTERED PROFESSIONAL ENGINEER JOHN W. CANTY No. 17550 Exp. 6/30/05 CIVIL STATE OF CALIFORNIA 4/19/05

REGISTERED PROFESSIONAL ENGINEER DAVID L. DRAKE No. C 64193 Exp. 06-30-07 CIVIL STATE OF CALIFORNIA 2-27-07

CITY OF RIVERSIDE PUBLIC UTILITIES DEPARTMENT-ELECTRIC OVERHEAD & UNDERGROUND	THE GAS COMPANY	PACIFIC BELL TELEPHONE	CHARTER COMMUNICATIONS	CITY OF RIVERSIDE WATER DIVISON
APPROVED BY [signature] DATE 9.13.00	APPROVED BY [signature] DATE 9-13-00	APPROVED BY [signature] DATE 9/14/00	APPROVED BY [signature] DATE 9-13-00	APPROVED BY [signature] DATE 11/2/00

WATER DEPARTMENT NOTE:
DEVELOPER TO GIVE CITY WATER DIVISION FIVE (5) WORKING DAYS WRITTEN NOTICE PRIOR TO START OF CONSTRUCTION AND TO ALLOW CITY TEN (10) WORKING DAYS FOR COMPLETION OF WORK.
909.351.6368

Underground Service Alert
Call: TOLL FREE 1 - 800 227 - 2600
TWO WORKING DAYS BEFORE YOU DIG

PRIVATE ENGINEERING NOTE

CONSTRUCTION CONTRACTOR AGREES THAT IN ACCORDANCE WITH GENERALLY ACCEPTED CONSTRUCTION PRACTICES, CONSTRUCTION CONTRACTOR WILL BE REQUIRED TO ASSUME SOLE AND COMPLETE RESPONSIBILITY FOR JOB SITE CONDITIONS DURING THE COURSE OF CONSTRUCTION OF THE PROJECT, INCLUDING SAFETY OF ALL PERSONS AND PROPERTY; THAT THIS REQUIREMENT SHALL BE MADE TO APPLY CONTINUOUSLY AND NOT BE LIMITED TO NORMAL WORKING HOURS, AND CONSTRUCTION CONTRACTOR FURTHER AGREES TO DEFEND, INDEMNIFY AND HOLD DESIGN PROFESSIONAL HARMLESS FROM ANY AND ALL LIABILITY, REAL OR ALLEGED, IN CONNECTION WITH THE PERFORMANCE OF WORK ON THIS PROJECT, EXCEPTING LIABILITY ARISING FROM THE SOLE NEGLIGENCE OF DESIGN PROFESSIONAL.

REGISTERED PROFESSIONAL ENGINEER JOHN W. CANTY No. 17550 Exp. 6-30-01 CIVIL STATE OF CALIFORNIA

PREPARED UNDER THE DIRECTION OF: [signature]
REGISTERED CIVIL ENGINEER NO. 17550
EXPIRATION DATE: 6-30-01 DATE: 9/12/00

CEG CANTY ENGINEERING GROUP, INC.
CIVIL ENGINEERING - PLANNING - SURVEYING
2020 IOWA AVENUE, SUITE 102, P.O. BOX 52050, RIVERSIDE, CA 92517
TEL (909) 683 - 5234 FAX (909) 683 - 5301
CITY OF RIV. BUSINESS TAX ACCT. NO. 69372 EXP. DATE 04-07-00

SCALE: AS SHOWN
DATE: JULY 1999
BENCH MARK: CITY OF RIV. B.M. E2-M3, PK NAIL & CITY ENGINEER TAG IN N'LY C.B. WING, W'LY CURB OF PIERCE ST. 1300' S'LY OF AMBS DR. ELEV.=694.231

MARK	REVISIONS	APPR.	DATE
7	REV. SHTS 8, 9 & 10 ADD DRWYS - CURVE WALKWAY	RVZ	11/15/07
6	ADD BUS STOP TURNOUT	RVZ	2/27/07
5	ADD CONST. NOTES 49, 50 & 51	RVZ	4/4/02
4	ADD CONST. NOTE #48	RVZ	4/2/02
3	ADD PAVEMENT SECTIONS	RVZ	2/26/02
2	ADD. CONST. NOTE 47; WC RAMP TYPE III	RVZ	2/26/02
1	REV. SEC. RIVERWALK STA. 76+06 TO PIERCE ST.	[initials]	12/21/01

DESIGNED BY P.J.C. DRAWN BY P.J.C./C.C. CHECKED BY J.W.C.

CITY OF RIVERSIDE, CALIFORNIA
DEPARTMENT OF PUBLIC WORKS

APPROVED BY	BY	DATE
PRINCIPAL ENGR.	[initials]	11/21/00
PARK DEPARTMENT	[initials]	11/03/00
TRAFFIC DIVISION	[initials]	11/20/00
P.W. ENGR. MGR.	[initials]	11/21/00
ST. SERVICE	[initials]	11/15

APPROVED BY R. McGrath
DIRECTOR OF PUBLIC WORKS
DATE 11-21-00

IN THE CITY OF RIVERSIDE
LA SIERRA UNIVERSITY
STREET PLANS
TITLE SHEET
FOR: GRIFFIN INDUSTRIES

PROJECT NO. PW07-0455
R-3561
SHEET 1 OF 14
FILE NO.: 1104-001
PC-4268-S/P

INDEXED 12-5-2000 LH

GENERAL NOTES FOR STREET TREE PLANTING
CONTINUED FROM SHEET 1

4. THE DEVELOPER SHALL BE RESPONSIBLE TO ACCEPTABLY MAINTAIN ALL PLANTINGS FOR A MINIMUM PERIOD OF ONE (1) YEAR.

5. STREET TREE PLANTING SHALL BE AS FOLLOWS:

STREET NAME	BOTANICAL NAME/ COMMON NAME	MINIMUM SIZE	APPROX. SPACING	NUMBER REQUIRED
PIERCE STREET – LA SIERRA AVENUE TO SIERRA VISTA:				
* RELOCATE 10 EXISTING PALM TREES TO NEW RIGHT OF WAY LOCATIONS AS SHOWN ON THE PLANS (OR AS DESIGNATED BY THE STREET TREE INSPECTOR);				
* REMOVE 10 EACH EXISTING BROADLEAF TREES AS SHOWN ON PLANS: AND,				
* PLANT:	TRACHYCARPUS FORTUNEII/ FORTUNE PALMS	4' B.T.	45' O.C.	14 EACH
PIERCE STREET – LA SIERRA CHANNEL TO NEW PIERCE STREET:				
* RELOCATE 9 EXISTING PALM TREES TO NEW RIGHT OF WAY LOCATIONS AS SHOWN ON THE PLANS (OR AS DESIGNATED BY THE STREET TREE INSPECTOR);				
* REMOVE 2 EACH EXISTING BROADLEAF TREES AS SHOWN ON PLANS: AND,				
* SEE REVERSE FRONTAGE LANDSCAPE PLAN NO. R-3561-L AS PREPARED BY THE COLLABORATIVE WEST DATED JUNE 1, 2000.				
PIERCE STREET – AT SIERRA VISTA:				
* RELOCATE 2 EXISTING PALM TREES TO NEW RIGHT OF WAY LOCATIONS AS SHOWN ON THE PLANS (OR AS DESIGNATED BY THE STREET TREE INSPECTOR);				
* REMOVE 10 EACH EXISTING BROADLEAF TREES AS SHOWN ON PLANS: AND,				
* PLANT:	TRACHYCARPUS FORTUNEII/ FORTUNE PALMS	4' B.T.	45' O.C.	14 EACH
PIERCE STREET – RIVERWALK TO OLD PIERCE STREET:				
* PLANT:	TRACHYCARPUS FORTUNEII/ FORTUNE PALMS	4' B.T.	45' O.C.	14 EACH
RIVERWALK PARKWAY:				
* SEE REVERSE FRONTAGE LANDSCAPE PLAN NO. R-3561-L AS PREPARED BY THE COLLABORATIVE WEST DATED JUNE 1, 2000.				
SIERRA VISTA STREET:				
* PLANT:	LAGERSTROEMIA INDICA/ CRAPE MYRTLE	15 GAL.	45' O.C.	84 EACH
PIERCE STREET – STATION 10+05 TO 15+00				
* PLANT:	TRACHYCARPUS FORTUNEII/ FORTUNE PALMS	4' B.T.	45' O.C.	5 EACH

6. BOTH A STREET RELOCATION/REMOVAL PERMIT AS ISSUED BY THE PARK AND RECREATION DEPARTMENT AND A STREET OPENING PERMIT AS ISSUED BY THE PUBLIC WORKS DEPARTMENT ARE REQUIRED PRIOR TO COMMENCEMENT OF TREEE RELOCATION AND/OR REMOVAL WORK, FOR ALL EXISTING TREES WITHIN WHAT WILL ULTIMATELY BE THE PUBLIC RIGHT-OF WAY PAVEMENT AREA, BACKFILL OF ALL HOLES MUST BE INSPECTED BY THE PUBLIC WORKS INSPECTOR FOR PROPER COMPACTION.

7. ALL STREET TREES MUST BE AUTOMATICALLY IRRIGATED.

* NOTE: IN THE INTEREST OF PUBLIC SAFETY AND MAINTENANCE THE STREET TREE INSPECTOR SHALL HAVE THE AUTHORITY TO REVISE THE STREET TREE QUANTITIES AND LOCATIONS SHOWN ON APPROVED PLANS BASED UPON FIELD CONDITIONS FOUND AT THE TIME OF INSTALLATION OF THE TREES.

PROFILE SCALES
1" = 40' HORZ.
1" = 4' VERT.

LEGEND

REMOVE EX. A.C. PAVEMENT

CONSTRUCTION NOTES

1. CONSTRUCT 4" A.C. OVER 6" CRUSHED AGG. BASE PER TYP. SECTIONS
2. CONSTRUCT 6" CURB (TYPE I) PER CITY STD. DWG. NO. 200
3. CONSTRUCT 8" CURB (TYPE II) PER CITY STD. DWG. NO. 200
4. CONSTRUCT PROPERTY LINE SIDEWALK PER CITY STD. DWG. NO. 325.
8. CONST. DRIVEWAY APPROACH (TYPE CURB-I) PER CITY STD. DWG NO. 302, "A" & "B" AS NOTED.
9. REMOVE EXIST. A.C. PAVEMENT.
11. REMOVE EXIST. DRIVEWAY.
12. REMOVE EXIST. CURB & GUTTER.
13. REMOVE EXIST. SIDEWALK.
14. RELOCATE EXSITING STREET LIGHT PER CITY OF RIVERSIDE PUBLIC UTILITIES DWG UOL5 604745.
15. REMOVE EXIST. TREES.
17. REMOVE EXISTING C.L. FENCE.
18. F.H. TO BE SALVAGED BY CITY FORCES.
19. REMOVE EX. A.C. BERM.
20. REMOVE EX. TRAFFIC SIGN.
23. RELOCATE EXIST. (AS NOTED)
24. ADJUST EXIST. MH/UTILITY VAULT TO GRADE (AS NOTED).
26. REMOVE EXISTING UTILITY FACILITY BY OTHER (AS NOTED)
30. CONST. CATCH BASIN PER CITY STD. DWG. NO. 405, SIZE AS NOTED.
34. CONST. DRIVEWAY APPROACH (TYPE PL-II) PER CITY STD. DWG NO. 302, "A" & "B" AS NOTED.
35. RELOCATE PALM TREES AS SHOWN ON PLANS & PROVIDE AUTOMATIC IRRIGATION SYSTEM.
38. CONSTRUCT BROOKS PRODUCTS 24"X24" V=36" CATCH BASIN WITH STEEL TRAFFIC GRATE DWG NO. 2424
42. WATER VALVE COVER TO BE ADJUSTED TO GRADE (BY CITY FORCES).

DATA TABLE

CURVE/LINE	DELTA/BERN	RADIUS	LENGTH	TANGENT	CURVE/LINE	DELTA/BEARING	RADIUS	LENGTH	TANGENT
1	N33°31'58"W	—	215.89	—	11	14°09'13"	50.00	12.35	6.21
2	4°37'05"	626.96	50.53	25.28	12	N 48°28'37"W	—	36.66	—
3	28°05'05"	1193.00	584.79	298.38	13	14°09'13"	50.00	12.35	6.21
4	35°17'02"	1241.00	764.23	394.67	14	N34°19'24"W	—	60.00	—
5	38°03'50"	1207.00	801.86	416.36	15	180°00'00"	1.00	3.14	—
6	REVERSE TAPER PER CITY STD. DWG. 122				16	180°00'00"	1.00	3.14	—
7	55°56'12"	1200.00	1171.54	637.20	17	00°31'31"	1202.00	12.07	6.03
8	39°52'38"	1159.00	806.65	420.44	18	27°14'41"	50.00	23.78	12.12
9	N29°42'19"W	—	49.60	—	19	29°30'44"	50.00	25.75	13.17
10	180°00'00"	5.23	16.28	—					

CITY OF RIVERSIDE
WATER DIVISION

Richard A. Derkels 11/2/00
APPROVED BY DATE

RIVERWALK PARKWAY

Underground Service Alert
Call: TOLL FREE
1 – 800
227-2600
TWO WORKING DAYS BEFORE YOU DIG

PRIVATE ENGINEERING NOTE

CONSTRUCTION CONTRACTOR AGREES THAT IN ACCORDANCE WITH GENERALLY ACCEPTED CONSTRUCTION PRACTICES, CONSTRUCTION CONTRACTOR WILL BE REQUIRED TO ASSUME SOLE AND COMPLETE RESPONSIBILITY FOR JOB SITE CONDITIONS DURING THE COURSE OF CONSTRUCTION OF THE PROJECT, INCLUDING SAFETY OF ALL PERSONS AND PROPERTY; THAT THIS REQUIREMENT SHALL BE MADE TO APPLY CONTINUOUSLY AND NOT BE LIMITED TO NORMAL WORKING HOURS, AND CONSTRUCTION CONTRACTOR FURTHER AGREES TO DEFEND, INDEMNIFY AND HOLD DESIGN PROFESSIONAL HARMLESS FROM ANY AND ALL LIABILITY, REAL OR ALLEGED, IN CONNECTION WITH THE PERFORMANCE OF WORK ON THIS PROJECT, EXCEPTING LIABILITY ARISING FROM THE SOLE NEGLIGENCE OF DESIGN PROFESSIONAL.

REGISTERED PROFESSIONAL ENGINEER JOHN W. CANTY No. 17550 Exp. 6-30-01 CIVIL STATE OF CALIFORNIA

PREPARED UNDER THE DIRECTION OF:
John W. Canty
REGISTERED CIVIL ENGINEER NO. 17550
EXPIRATION DATE: 6-30-01 DATE: 10/30/00

CBG CANTY ENGINEERING GROUP, INC.
CIVIL ENGINEERING – PLANNING – SURVEYING
2020 IOWA AVENUE, SUITE 102, P.O. BOX 52050, RIVERSIDE, CA 92517
TEL (909) 683 – 5234 FAX (909) 683 – 5301
CITY OF RIV. BUSINESS TAX ACCT. NO. 69372 EXP. DATE 04-07-00

SCALE: 1"=40' DATE: JULY 1999

BENCH MARK:
CITY OF RIV. B.M. E2-M3, PK NAIL & CITY ENGINEER TAG IN N'LY C.B. WING, W'LY CURB OF PIERCE ST. 1300' S'LY OF AMBS DR.
ELEV.=694.231

AS BUILT

MARK	REVISIONS	APPR.	DATE
2	ADD DRIVEWAY	RVZ	3/28/02
1	ADDED LEFT TURN POCKET IN MEDIAN	RVZ	1/10/02

DESIGNED BY P.J.C. DRAWN BY P.J.C. CHECKED BY J.W.C.

CITY OF RIVERSIDE, CALIFORNIA
DEPARTMENT OF PUBLIC WORKS

	BY	DATE
APPROVED BY		
PRINCIPAL ENGR.		11/14/00
PARK DEPARTMENT		11/07/00
TRAFFIC DIVISION		11/20/00
P.W. ENGR. MGR.		11/21/00
ST. SERVICES		11/6/00

APPROVED BY
R. McGrath
DIRECTOR OF PUBLIC WORKS
DATE 11-21-00

IN THE CITY OF RIVERSIDE
LA SIERRA UNIVERSITY
STREET PLANS
RIVERWALK PARKWAY
STA. 10+00 TO 19+00
FOR: GRIFFIN INDUSTRIES

PROJECT NO. R-3561
SHEET 2 OF 14
FILE NO.: 1104-001

PC-4268-S/P

INDEXED 12-5-2000 LH

PROFILE SCALES
1" = 40' HORZ.
1" = 4' VERT.

STA. 19+00 MATCHLINE SEE SHEET 2

STA. 31+00 MATCHLINE SEE SHEET 4

690 LT. / 690 MEDIAN LT. / 690 MEDIAN RT. / 700 RT. / 690 RT.

PROP. T.C. (6" CF) @ 41' LT.

PROP. T.C. (8" C.F.) @ MEDIAN LT.

PROP. T.C. (8" C.F.) @ MEDIAN RT.

PROP. T.C. (6" CF) @ 41' RT.

EXIST. GROUND @ R/W 55' LT.

EXISTING GROUND @ C/L

EXIST. GROUND @ R/W 55' RT.

19 20 21 22 23 24 25 26 27 28 29 30 31

20+19.59 692.25TC, 691.75FL

22+24.09 ℄ C.B. W=4' V=4' Q10=1.5cfs Q50=1.9cfs 692.27TC 691.52FL

22+28.59 692.29TC 691.79FL

27+50 ℄ C.B. W=24' V=5' Q10=42.7cfs Q50=56.6cfs 693.03TC 692.28FL

27+50 ℄ C.B. W=7' V=6' Q10=1.4cfs Q50=1.9cfs 693.03TC 692.28FL

27+44 693.03TC 693.53FL

27+56 693.03TC 693.53FL

27+50 ℄ C.B. W=4' V=6' 693.03TC Q10=1.4cfs Q50=1.9cfs

27+55 ℄ C.B. Q10=0.26cfs

22+24.09 C/L CB W=4' V=4' Q10=1.5CFS Q10=1.9CFS 692.27TC

22+19.59 692.25TC 691.75FL

22+28.59 692.29TC 692.79FL

A.C. SWALE N.T.S.

PIERCE STREET SEE SHT. 12

N81°32'22"W

STA. 21+53.86 CL RIVERWALK = STA.10+00.00 CL PIERCE

RIDGE LINE

PROP. STORM DRAIN LINE "H" PER D-678

PROP. SD PER D-678 LINE "B"

PROP. STORM DRAIN LINE "C" PER D-678

N 21°36'48" E 745.41'

SEE LAKE AND STREAM GRADING PLAN D-678A

GRADE TO DRAIN

SEE SHEET 11

DETAIL "B" N.T.S.

PARABOLIC FLARE PER STD. DWG. NO. 123

DIST. X (FT.)	10	20	25	30	40	50
OFFSET Y (FT.)	0.40	1.60	2.50	3.60	6.40	10.00

CONSTRUCTION NOTES

1. CONSTRUCT 4" A.C. OVER 6" CRUSHED AGG. BASE PER TYP. SECTIONS
2. CONSTRUCT 6" CURB (TYPE I) PER CITY STD. DWG. NO. 200
3. CONSTRUCT 8" CURB (TYPE II) PER CITY STD. DWG. NO. 200
4. CONSTRUCT PROPERTY LINE SIDEWALK PER CITY STD. DWG. NO. 325.
5. CONSTRUCT WHEELCHAIR RAMPS PER CITY STD. DWG. NO. 304, (TYPE 1).
6. INSTALL 2"x6" REDWOOD HEADER
10. CONSTRUCT BARRICADE PER CITY STD. DWG. NO. 180.
29. BUILD A.C. SWALE PER DETAIL ON THIS SHEET.
30. CONST. CATCH BASIN PER CITY STD. DWG. NO. 405, SIZE AS NOTED.

DATA TABLE

CURVE/LINE	DELTA/BEARING	RADIUS	LEN/DIST	TANGENT
1	55°56'12"	1159.00	1131.51	615.43
2	7°09'45"	1203.00	150.39	75.29
3	38°03'50"	1207.00	801.86	416.36
4	REVERSE TAPER PER STD. DWG. 122, L=120 W=10'			
5	55°56'12"	1200.00	1171.54	637.20
6	180°00'00"	2.00	6.27	–
7	N10°35'00"W	–	40.32	–
8	87°26'23"	35.00	53.41	33.47
9	180°00'00"	2.00	6.27	–
10	REVERSE TAPER PER STD. DWG. 122, L=120 W=10'			
11	10°54'55"	1207.00	229.94	115.32
12	8°33'46"	1193.00	178.28	89.31
13	10°35'32"	1241.00	229.42	115.04
14	35°12'02"	1241.00	762.43	393.68
15	N81°32'22"W	–	248.94	–
16	92°54'25"	35.00	56.75	36.82

40 20 0 40 80 120
SCALE IN FEET

CITY OF RIVERSIDE
WATER DIVISON

APPROVED BY DATE

AS BUILT

RIVERWALK PARKWAY

Underground Service Alert
Call: TOLL FREE 1 - 800 227-2600
TWO WORKING DAYS BEFORE YOU DIG

PRIVATE ENGINEERING NOTE

CONSTRUCTION CONTRACTOR AGREES THAT IN ACCORDANCE WITH GENERALLY ACCEPTED CONSTRUCTION PRACTICES, CONSTRUCTION CONTRACTOR WILL BE REQUIRED TO ASSUME SOLE AND COMPLETE RESPONSIBILITY FOR JOB SITE CONDITIONS DURING THE COURSE OF CONSTRUCTION OF THE PROJECT, INCLUDING SAFETY OF ALL PERSONS AND PROPERTY; THAT THIS REQUIREMENT SHALL BE MADE TO APPLY CONTINUOUSLY AND NOT BE LIMITED TO NORMAL WORKING HOURS, AND CONSTRUCTION CONTRACTOR FURTHER AGREES TO DEFEND, INDEMNIFY AND HOLD DESIGN PROFESSIONAL HARMLESS FROM ANY AND ALL LIABILITY, REAL OR ALLEGED, IN CONNECTION WITH THE PERFORMANCE OF WORK ON THIS PROJECT, EXCEPTING LIABILITY ARISING FROM THE SOLE NEGLIGENCE OF DESIGN PROFESSIONAL.

REGISTERED PROFESSIONAL ENGINEER JOHN W. CANTY No. 17550 Exp. 6-30-01 CIVIL STATE OF CALIFORNIA

PREPARED UNDER THE DIRECTION OF:
REGISTERED CIVIL ENGINEER NO. 17550
EXPIRATION DATE: 6-30-01 DATE: 9/12/00

REGISTERED PROFESSIONAL ENGINEER JOHN W. CANTY No. 17550 Exp. 6-30-01 CIVIL STATE OF CALIFORNIA

CEG CANTY ENGINEERING GROUP, INC.
CIVIL ENGINEERING – PLANNING – SURVEYING
2020 IOWA AVENUE, SUITE 102, P.O. BOX 52050, RIVERSIDE, CA 92517
TEL (909) 683 – 5234 FAX (909) 683 – 5301
CITY OF RIV. BUSINESS TAX ACCT. NO. 69372 EXP. DATE 04-07-00

SCALE: 1"=40'
DATE: JULY 1999

BENCH MARK:
CITY OF RIV. B.M. E2-M3, PK NAIL & CITY ENGINEER TAG IN N'LY C.B. WING, W'LY CURB OF PIERCE ST. 1300' S'LY OF AMBS DR.
ELEV.=694.231

MARK	REVISIONS	APPR.	DATE
1	EXTEND PIERCE ST. E/O RIVERWALK		9/12/00

DESIGNED BY P.J.C. DRAWN BY C.C. CHECKED BY J.W.C.

CITY OF RIVERSIDE, CALIFORNIA
DEPARTMENT OF PUBLIC WORKS

APPROVED BY	BY	DATE
PRINCIPAL ENGR.		9/12/00
PARK DEPARTMENT		9/13/00
TRAFFIC DIVISION		11/21/00
P.W. ENGR. MGR.		9/14/00
ST. SERVICES		9/15

APPROVED BY
DIRECTOR OF PUBLIC WORKS
DATE 11-21-00

IN THE CITY OF RIVERSIDE
LA SIERRA UNIVERSITY
STREET PLANS
RIVERWALK PARKWAY
STA. 19+00.00 TO 31+00.00
FOR: GRIFFIN INDUSTRIES

PROJECT NO. R-3561
SHEET 3 OF 14
FILE NO.: 1104-001

PC-4268-S/P

INDEXED 12-5-2000 GH

700 LT

700 MEDIAN LT.

00 MEDIAN RT.

700 RT

STA. 31+00.00 MATCHLINE SEE SHEET 3

STA. 42+00.00 MATCHLINE SEE SHEET 5

700 LT

700 MEDIAN LT.

00 MEDIAN RT.

700 RT

100.00' VC P.I. @ 31+50, 694.93

100.00' VC P.I. @ 31+50 695.67

100.00' VC P.I. @ 33+50, 694.67

100.00' VC P.I. @ 33+50, 693.90

STA. 33+50 ℄ C.BASIN W=4' V=4' Q10=2.0cfs Q50=2.6cfs 694.03TC 693.28FL

33+45.50 694.03TC 693.53FL

33+54.50 694.03TC 693.53FL

PROP. T.C. (6" CF) ⊙ 41' LT.

EXIST. GROUND ⊙ R/W 55' LT.

PROP. T.C. (8" C.F.) ⊙ MEDIAN LT.

EXIST. GROUND ⊙ C/L

PROP. T.C. (8" C.F.) ⊙ MEDIAN RT.

EXIST. GROUND ⊙ R/W 55' RT.

PROP. C.F. (6" C.F.) ⊙ 41' RT.

8"WTR 690.03FL±

6"WTR 690.20FL±

12"WTR 689.7FL±

STA. 33+50 ℄ C.B. W=4' V=4' Q10=2.5cfs Q50=3.5cfs 694.03TC 693.28FL

STA. 41+34.56 C.B. W=21' V=4.0' Q10=8.1 cfs 697.83 TC 697.08 FL

41+21.56 697.77TC 697.27FL

41+47.56 697.90TC 697.0FL

L=54.98 P.I.=697.25 S1=+0.51% S2=+1.09%

L=54.98 P.I.=97.93 S1=-0.49% S2=-0.51%

40+51.08 P/L INT.

L=54.98 P.I.=697.38 S1=-0.87% S2=-0.17%

L=54.98 P.I.=697.55 S1=0.66% S2=0.57%

PROFILE SCALES 1" = 40' HORZ. 1" = 4' VERT.

31 32 33 34 35 36 37 38 39 40 41 42 43

DATA TABLE

◯	DELTA/BEARING	RADIUS	LEN./DIST.	TANGENT
①	53'38'58""	850.00'	795.91	429.83
②	53'38'58""	809.00	757.51	409.09
③	53'38'58""	891.00	834.30	450.56
④	53'38'58""	843.00	789.35	426.29
⑤	37'05'28"	857.00	554.79	287.51
⑥	REVERSE TAPER PER STD. DWG. NO. 122 L=120 W=10'			
⑦	N24'22'25"W	–	40.38'	–
⑧	REVERSE TAPER PER STD. DWG. NO. 122 L=120 W=10'			
⑨	8'28'08"	847.00	125.20	62.71

DATA TABLE

◯	DELTA/BEARING	RADIUS	LEN./DIST.	TANGENT
⑩	S32'02'10"E	–	13.42	–
⑪	S32'02'10"E	–	13.42	–
⑫	90'00'00"	35.00'	54.89	35.00
⑬	90'00'00"	35.00'	54.89	35.00
⑭	90'00'00"	35.00'	54.89	35.00
⑮	90'00'00"	35.00'	54.89	35.00
⑯	180'00'00"	2.00	6.27	–
⑰	180'00'00"	2.00	6.27	–
⑱	S32'02'10"E	–	24.36	–

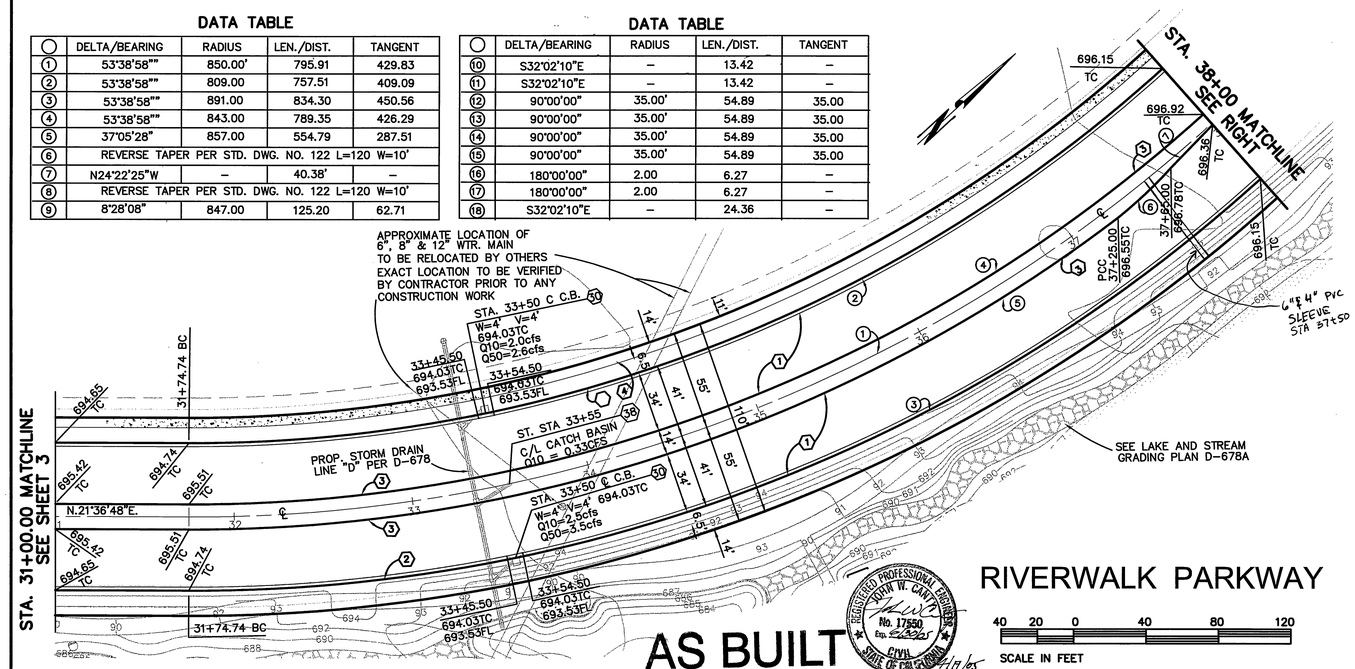

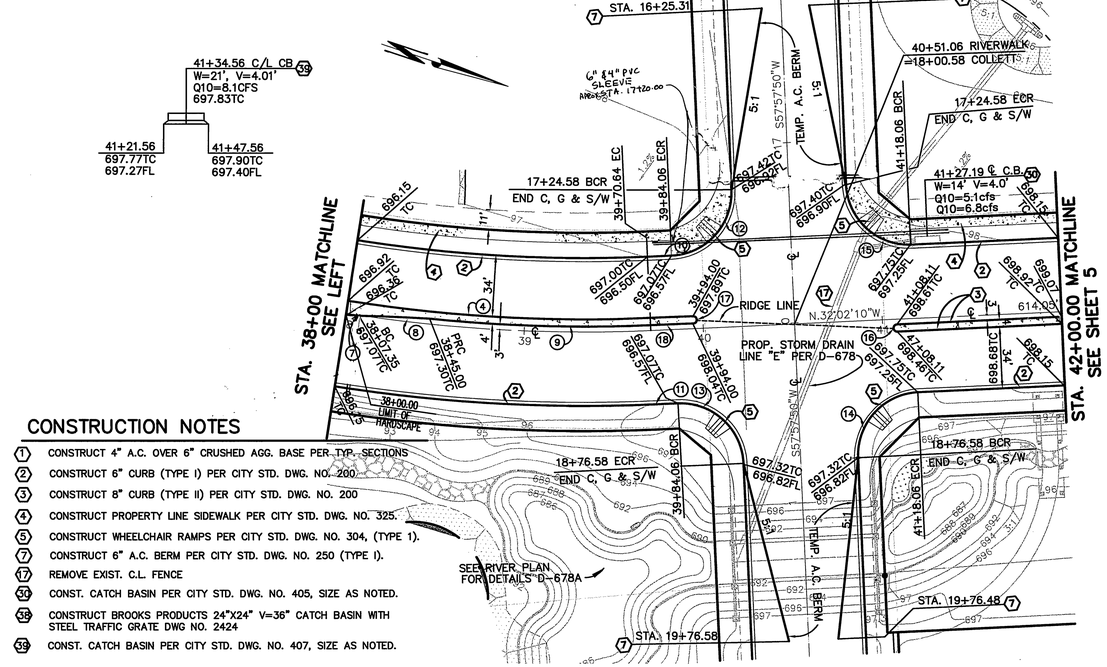

CONSTRUCTION NOTES

1. CONSTRUCT 4" A.C. OVER 6" CRUSHED AGG. BASE PER TYP. SECTIONS
2. CONSTRUCT 6" CURB (TYPE I) PER CITY STD. DWG. NO. 200
3. CONSTRUCT 8" CURB (TYPE II) PER CITY STD. DWG. NO. 200
4. CONSTRUCT PROPERTY LINE SIDEWALK PER CITY STD. DWG. NO. 325.
5. CONSTRUCT WHEELCHAIR RAMPS PER CITY STD. DWG. NO. 304, (TYPE 1).
7. CONSTRUCT 6" A.C. BERM PER CITY STD. DWG. NO. 250 (TYPE I).
17. REMOVE EXIST. C.L. FENCE
50. CONST. CATCH BASIN PER CITY STD. DWG. NO. 405, SIZE AS NOTED.
58. CONSTRUCT BROOKS PRODUCTS 24"X24" V=36" CATCH BASIN WITH STEEL TRAFFIC GRATE DWG NO. 2424
59. CONST. CATCH BASIN PER CITY STD. DWG. NO. 407, SIZE AS NOTED.

AS BUILT

RIVERWALK PARKWAY

40 20 0 40 80 120

SCALE IN FEET

REGISTERED PROFESSIONAL ENGINEER JOHN W. CANTY No. 17550 Exp. 6-30-01 CIVIL STATE OF CALIFORNIA 11/18/05

Underground Service Alert
Call: TOLL FREE 1 – 800 227–2600
TWO WORKING DAYS BEFORE YOU DIG

PRIVATE ENGINEERING NOTE

CONSTRUCTION CONTRACTOR AGREES THAT IN ACCORDANCE WITH GENERALLY ACCEPTED CONSTRUCTION PRACTICES, CONSTRUCTION CONTRACTOR WILL BE REQUIRED TO ASSUME SOLE AND COMPLETE RESPONSIBILITY FOR JOB SITE CONDITIONS DURING THE COURSE OF CONSTRUCTION OF THE PROJECT, INCLUDING SAFETY OF ALL PERSONS AND PROPERTY; THAT THIS REQUIREMENT SHALL BE MADE TO APPLY CONTINUOUSLY AND NOT BE LIMITED TO NORMAL WORKING HOURS, AND CONSTRUCTION CONTRACTOR FURTHER AGREES TO DEFEND, INDEMNIFY AND HOLD DESIGN PROFESSIONAL HARMLESS FROM ANY AND ALL LIABILITY, REAL OR ALLEGED, IN CONNECTION WITH THE PERFORMANCE OF WORK ON THIS PROJECT, EXCEPTING LIABILITY ARISING FROM THE SOLE NEGLIGENCE OF DESIGN PROFESSIONAL.

REGISTERED PROFESSIONAL ENGINEER JOHN W. CANTY No. 17550 Exp. 6-30-01 CIVIL STATE OF CALIFORNIA

PREPARED UNDER THE DIRECTION OF:
REGISTERED CIVIL ENGINEER NO. 17550
EXPIRATION DATE: 6-30-01 DATE: 9/12/00

CBG CANTY ENGINEERING GROUP, INC.
CIVIL ENGINEERING – PLANNING – SURVEYING
2020 IOWA AVENUE, SUITE 102, P.O. BOX 52050, RIVERSIDE, CA 92517
TEL (909) 683 – 5234 FAX (909) 683 – 5301
CITY OF RIV. BUSINESS TAX ACCT. NO. 69372 EXP. DATE 04–07–00

SCALE: 1"=40'
DATE: JULY 1999

BENCH MARK:
CITY OF RIV. B.M. 'E2–M3, PK NAIL & CITY ENGINEER TAG IN N'LY C.B. WING, W'LY CURB OF PIERCE ST. 1300' S'LY OF AMBS DR.
ELEV.=694.231

MARK	REVISIONS	APPR.	DATE

DESIGNED BY P.J.C. DRAWN BY C.C. CHECKED BY J.W.C.

CITY OF RIVERSIDE, CALIFORNIA
DEPARTMENT OF PUBLIC WORKS

	BY	DATE
APPROVED BY		
PRINCIPAL ENGR.		
PARK DEPARTMENT		
TRAFFIC DIVISION		
P.W. ENGR. MGR.		
ST. SERVICES		

APPROVED BY R. McGrath
DIRECTOR OF PUBLIC WORKS
DATE 11-21-00

IN THE CITY OF RIVERSIDE
LA SIERRA UNIVERSITY
STREET PLANS
RIVERWALK PARKWAY
STA. 31+00 TO STA. 42+00
FOR: GRIFFIN INDUSTRIES

PROJECT NO. R-3561
SHEET 4 OF 14
FILE NO.: 1104-001

PC-4268-S/P

INDEXED 12-5-2000 LFH

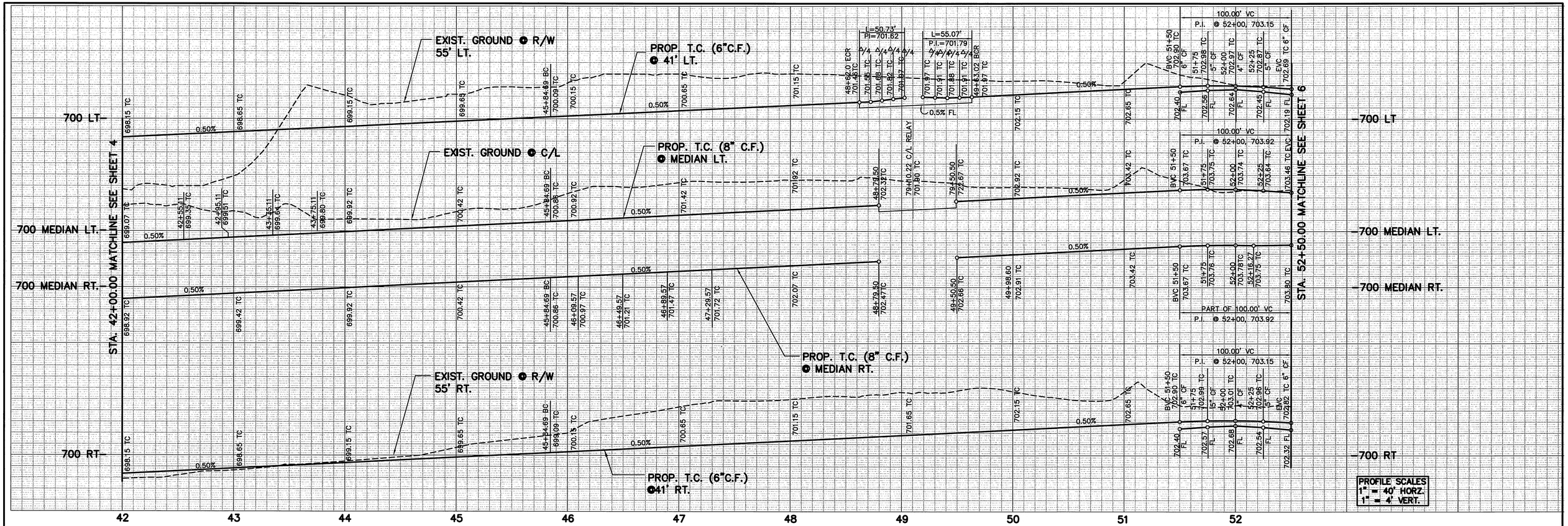

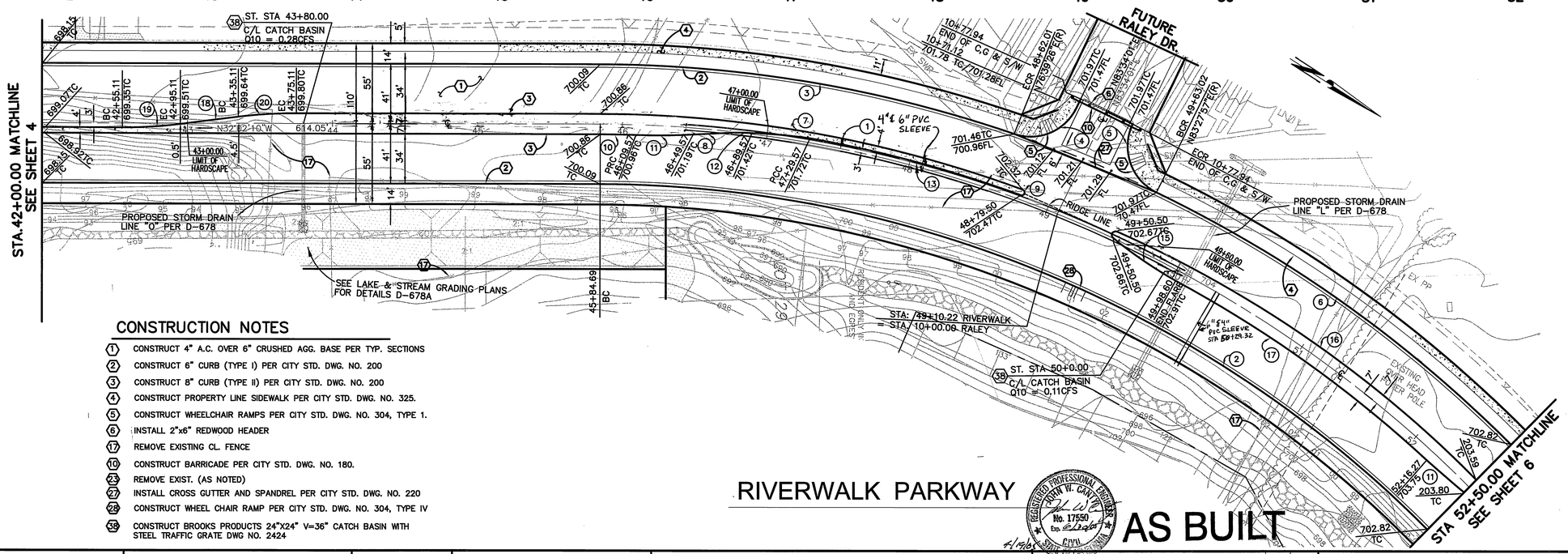

DATA TABLE

CURVE/LINE	DELTA/BEAR'G	RADIUS	LEN./DIST.	TANGENT
1	66°59'22"	850.00	993.81	562.49
2	66°59'22"	809.00	945.87	535.36
3	18°41'36"	891.00	290.70	146.65
4	83°02'23"	35.00	50.73	30.99
5	90°09'06"	35.00	55.07	35.09
6	41°29'15"	891.00	645.17	337.46
7	19°52'37"	857.00	297.31	150.16
8	N35°01'38"W	–	32.46	–
9	180°00'00"	2.0	6.28	–
10	1°40'37"	843.00	24.67	12.34
11	RENERSE TAPER PER STD. DWG. NO. 122 L=120' W=10'			
12				
13	10°06'40"	853.00	150.53	75.46
15	PARABOLIC FRALE PER DETAIL "B" ON SHEET 3			
16	42°25'57"	857.00	634.68	332.69
17	14°21'15"	843.00	211.19	106.15
18	S39°11'25"E	–	40.29	–
19	REVERSE TAPER PER STD. DWG. NO. 122 L=120' W=10'			
20				

CONSTRUCTION NOTES

1. CONSTRUCT 4" A.C. OVER 6" CRUSHED AGG. BASE PER TYP. SECTIONS
2. CONSTRUCT 6" CURB (TYPE I) PER CITY STD. DWG. NO. 200
3. CONSTRUCT 8" CURB (TYPE II) PER CITY STD. DWG. NO. 200
4. CONSTRUCT PROPERTY LINE SIDEWALK PER CITY STD. DWG. NO. 325.
5. CONSTRUCT WHEELCHAIR RAMPS PER CITY STD. DWG. NO. 304, TYPE 1.
6. INSTALL 2"x6" REDWOOD HEADER
17. REMOVE EXISTING CL. FENCE
10. CONSTRUCT BARRICADE PER CITY STD. DWG. NO. 180.
23. REMOVE EXIST. (AS NOTED)
27. INSTALL CROSS GUTTER AND SPANDREL PER CITY STD. DWG. NO. 220
28. CONSTRUCT WHEEL CHAIR RAMP PER CITY STD. DWG. NO. 304, TYPE IV
38. CONSTRUCT BROOKS PRODUCTS 24"X24" V=36" CATCH BASIN WITH STEEL TRAFFIC GRATE DWG NO. 2424

SCALE IN FEET: 40 20 0 40 80 120

RIVERWALK PARKWAY AS BUILT

REGISTERED PROFESSIONAL ENGINEER JOHN W. CANTY No. 17550 Exp. 6-30-01 CIVIL STATE OF CALIFORNIA

4/19/01

Underground Service Alert
Call: TOLL FREE 1 – 800 227–2600
TWO WORKING DAYS BEFORE YOU DIG

PRIVATE ENGINEERING NOTE

CONSTRUCTION CONTRACTOR AGREES THAT IN ACCORDANCE WITH GENERALLY ACCEPTED CONSTRUCTION PRACTICES, CONSTRUCTION CONTRACTOR WILL BE REQUIRED TO ASSUME SOLE AND COMPLETE RESPONSIBILITY FOR JOB SITE CONDITIONS DURING THE COURSE OF CONSTRUCTION OF THE PROJECT, INCLUDING SAFETY OF ALL PERSONS AND PROPERTY; THAT THIS REQUIREMENT SHALL BE MADE TO APPLY CONTINUOUSLY AND NOT BE LIMITED TO NORMAL WORKING HOURS, AND CONSTRUCTION CONTRACTOR FURTHER AGREES TO DEFEND, INDEMNIFY AND HOLD DESIGN PROFESSIONAL HARMLESS FROM ANY AND ALL LIABILITY, REAL OR ALLEGED, IN CONNECTION WITH THE PERFORMANCE OF WORK ON THIS PROJECT, EXCEPTING LIABILITY ARISING FROM THE SOLE NEGLIGENCE OF DESIGN PROFESSIONAL.

REGISTERED PROFESSIONAL ENGINEER JOHN W. CANTY No. 17550 Exp. 6-30-01 CIVIL STATE OF CALIFORNIA

PREPARED UNDER THE DIRECTION OF: John W. Canty
REGISTERED CIVIL ENGINEER NO. 17550
EXPIRATION DATE: 6-30-01 DATE: 9/12/00

CEG CANTY ENGINEERING GROUP, INC.
CIVIL ENGINEERING – PLANNING – SURVEYING
2020 IOWA AVENUE, SUITE 102, P.O. BOX 52050, RIVERSIDE, CA 92517
TEL (909) 683 – 5234 FAX (909) 683 – 5301
CITY OF RIV. BUSINESS TAX ACCT. NO. 69372 EXP. DATE 04–07–00

SCALE: 1"=40' DATE: JULY 1999

BENCH MARK: CITY OF RIV. B.M. E2–M3, PK NAIL & CITY ENGINEER TAG IN N'LY C.B. WING, W'LY CURB OF PIERCE ST. 1300' S'LY OF AMBS DR. ELEV.=694.231

MARK	REVISIONS	APPR.	DATE

DESIGNED BY P.J.C. DRAWN BY C.C. CHECKED BY J.W.C.

CITY OF RIVERSIDE, CALIFORNIA
DEPARTMENT OF PUBLIC WORKS

APPROVED BY	BY	DATE
PRINCIPAL ENGR.		
PARK DEPARTMENT		
TRAFFIC DIVISION		
P.W. ENGR. MGR.		
ST. SERVICES		

APPROVED BY R. McGrath
DIRECTOR OF PUBLIC WORKS
DATE 11-21-00

IN THE CITY OF RIVERSIDE
LA SIERRA UNIVERSITY
STREET PLANS
RIVERWALK PARKWAY
STA. 42+00 TO 52+50
FOR: GRIFFIN INDUSTRIES

PROJECT NO. R-3561
SHEET 5 OF 14
FILE NO.: 1104-001

PC-4268-S/P

INDEXED 12-5-2000 LH

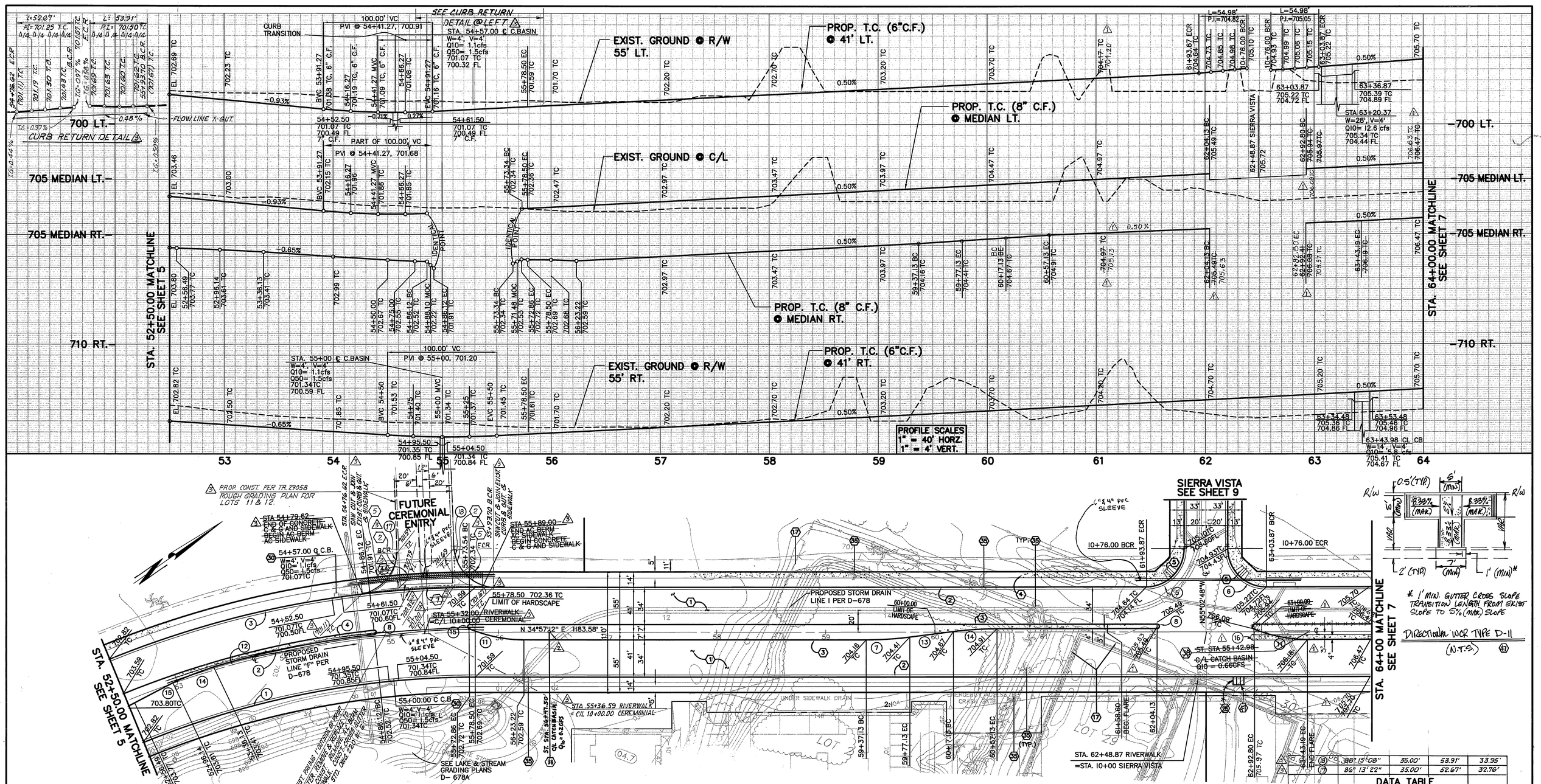

CONSTRUCTION NOTES

1. CONSTRUCT 4" A.C. OVER 6" CRUSHED AGG. BASE PER TYP. SECTIONS
2. CONSTRUCT 6" CURB (TYPE I) PER CITY STD. DWG. NO. 200
3. CONSTRUCT 8" CURB (TYPE II) PER CITY STD. DWG. NO. 200
4. CONSTRUCT PROPERTY LINE SIDEWALK PER CITY STD. DWG. NO. 325.
5. CONSTRUCT WHEELCHAIR RAMPS PER CITY STD. DWG. NO. 304 TYPE I.
7. CONSTRUCT 6" A.C. BERM PER CITY STD. DWG. NO. 250 (TYPE I).
15. REMOVE EXIST. TREES.
17. REMOVE EXISTING C.L. FENCE.
30. CONST. CATCH BASIN PER CITY STD. DWG. NO. 405, SIZE AS NOTED.
35. RELOCATE PALM TREES BY OTHERS.
38. CONSTRUCT BROOKS PRODUCTS 24"X24" V=36" CATCH BASIN WITH STEEL TRAFFIC GRATE DWG NO. 2424
39. CONST. CATCH BASIN PER CITY STD. DWG. NO. 407, SIZE AS NOTED.
44. CONSTRUCT PROPERTY LINE AC SIDEWALK PER MODIFIED RIV. STD DWG. NO. 325.
47. CONSTRUCT WHEELCHAIR RAMP PER DETAIL HEREON

63+20.88 ℄ C/L CB 39
W=20', V=4.01'
Q10=11.3CFS
705.31TC
63+08.38 705.25TC 704.75FL
63+33.38 705.37TC 704.87FL

63+31.48 705.36TC 704.86FL
63+56.48 705.48TC 704.98FL
63+43.98 ℄ C/L CB 39
W=20', V=4'
Q10=11.1CFS
705.42TC

RIVERWALK PARKWAY

AS BUILT

SCALE IN FEET 40 20 0 40 80 120

16	88° 15' 08"	35.00'	53.91'	33.95'
17	86° 13' 22"	35.00'	52.67'	32.76'

DATA TABLE

CURVE/LINE	DELTA/BER'G	RADIUS	LENGTH	TANGENT
1	66°59'22"	809.00	945.87	535.36
2	10°06'39"	853.00	150.53	75.46
3	41°29'15"	891.00	645.17	337.46
4	15°54'59"	857.00	238.07	119.81
5	90°00'00"	35.00	54.98	35.00
6	90°00'00"	35.00	54.98	35.00
7	REVERSE TAPER PER STD. DWG. NO. 122 L=120 ' W=10'			
8	180°00'00"	2.00	6.27	–
11	~~PARABOLIC FLARE PER DETAIL "B" ON SHEET 3~~			
12	66°59'22"	850.00	993.81	562.49
13	N27°48'03"E	–	40.31	–
14	REVERSE TAPER PER STD. DWG. NO. 122 L=120 ' W=10'			
15	N07°23'46"	–	39.86	–
16	180°00'00"	2.00	6.27	–

Underground Service Alert
Call: TOLL FREE 1 – 800 227–2600
TWO WORKING DAYS BEFORE YOU DIG

PRIVATE ENGINEERING NOTE

CONSTRUCTION CONTRACTOR AGREES THAT IN ACCORDANCE WITH GENERALLY ACCEPTED CONSTRUCTION PRACTICES, CONSTRUCTION CONTRACTOR WILL BE REQUIRED TO ASSUME SOLE AND COMPLETE RESPONSIBILITY FOR JOB SITE CONDITIONS DURING THE COURSE OF CONSTRUCTION OF THE PROJECT, INCLUDING SAFETY OF ALL PERSONS AND PROPERTY; THAT THIS REQUIREMENT SHALL BE MADE TO APPLY CONTINUOUSLY AND NOT BE LIMITED TO NORMAL WORKING HOURS, AND CONSTRUCTION CONTRACTOR FURTHER AGREES TO DEFEND, INDEMNIFY AND HOLD DESIGN PROFESSIONAL HARMLESS FROM ANY AND ALL LIABILITY, REAL OR ALLEGED, IN CONNECTION WITH THE PERFORMANCE OF WORK ON THIS PROJECT, EXCEPTING LIABILITY ARISING FROM THE SOLE NEGLIGENCE OF DESIGN PROFESSIONAL.

REGISTERED PROFESSIONAL ENGINEER JOHN W. CANTY No. 17550 Exp. 6-30-01 CIVIL STATE OF CALIFORNIA

PREPARED UNDER THE DIRECTION OF:
REGISTERED CIVIL ENGINEER NO. 17550
EXPIRATION DATE: 6-30-01 DATE: 3/12/00

CANTY ENGINEERING GROUP, INC.
CIVIL ENGINEERING – PLANNING – SURVEYING
2020 IOWA AVENUE, SUITE 102, P.O. BOX 52050, RIVERSIDE, CA 92517
TEL (909) 683 – 5234 FAX (909) 683 – 5301
CITY OF RIV. BUSINESS TAX ACCT. NO. 69372 EXP. DATE 04–07–00

SCALE: 1"=40' DATE: JULY 1999

BENCH MARK: CITY OF RIV. B.M. E2–M3, PK NAIL & CITY ENGINEER TAG IN N'LY C.B. WING, W'LY CURB OF PIERCE ST. 1300' S'LY OF AMBS DR. ELEV.=694.231

MARK	REVISIONS	APPR.	DATE
2	ADD CURB RETURNS & X-GUT FOR CEREMONIAL ENTRY	RVZ	3-8-00
1	ADD CATCHBASIN & LATERAL	RVZ	1/14/00
1	REVISED MEDIAN OPENING @ SIERRA VISTA	TRS	3/16/01

DESIGNED BY P.J.C. DRAWN BY C.C. CHECKED BY J.W.C.

CITY OF RIVERSIDE, CALIFORNIA
DEPARTMENT OF PUBLIC WORKS

	BY	DATE
APPROVED BY		
PRINCIPAL ENGR.		11/16/00
PARK DEPARTMENT		11/16/00
TRAFFIC DIVISION		11/20/00
P.W. ENGR. MGR.		11/21/00
ST. SERVICES		11/15

APPROVED BY R. M. Beatty
DIRECTOR OF PUBLIC WORKS
DATE 11-21-00

IN THE CITY OF RIVERSIDE
LA SIERRA UNIVERSITY
STREET PLANS
RIVERWALK PARKWAY
STA. 52+50 TO 64+00
FOR: GRIFFIN INDUSTRIES

PROJECT NO. R–3561
SHEET 6 OF 14
FILE NO.: 1104–001

DC-4268-S/P

INDEXED 12-5-2000 LH

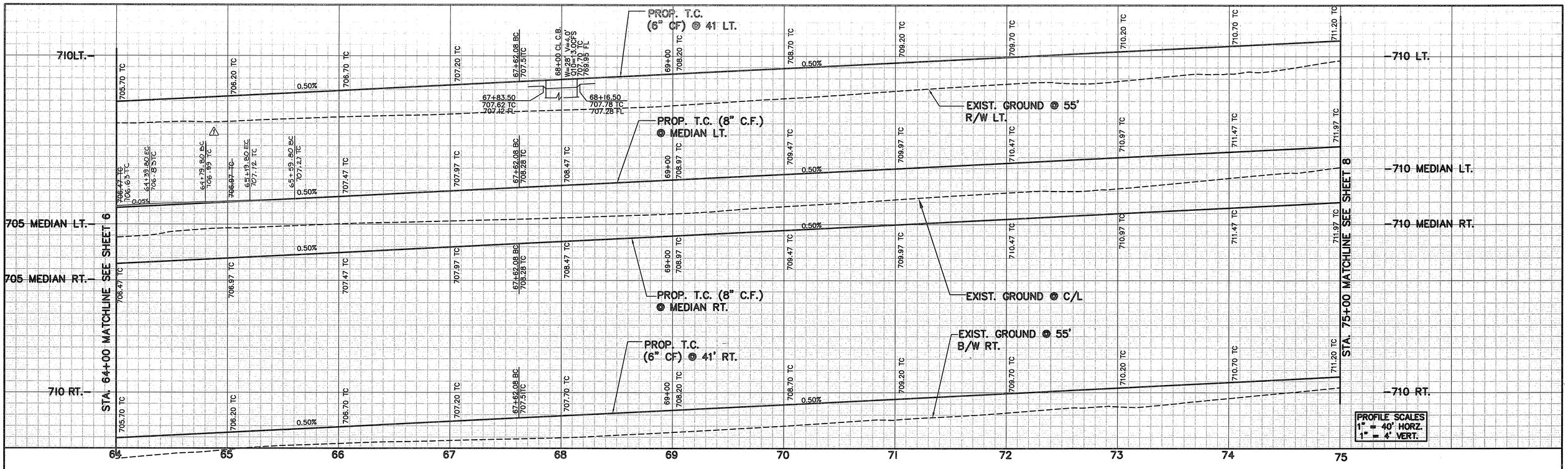

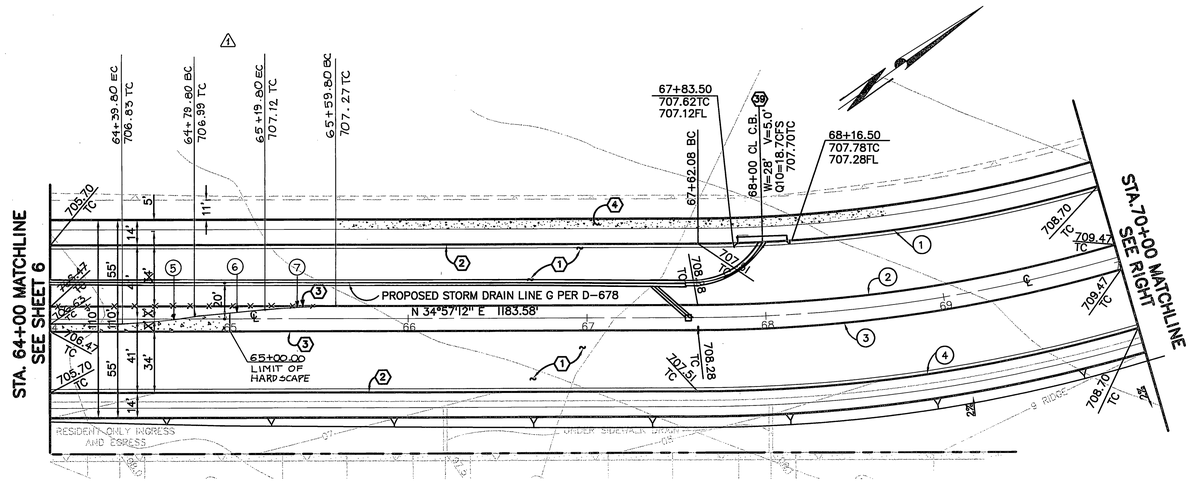

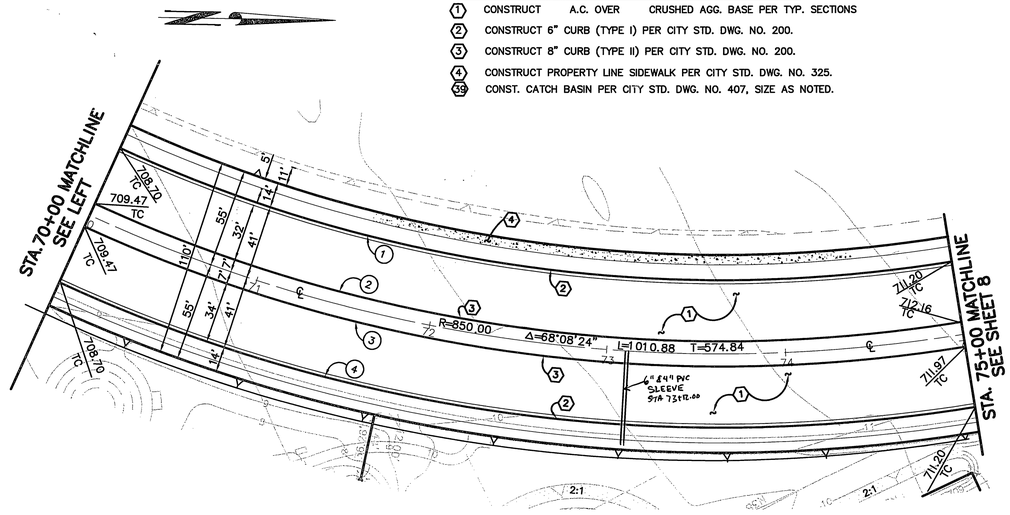

CONSTRUCTION NOTES

1. CONSTRUCT A.C. OVER CRUSHED AGG. BASE PER TYP. SECTIONS
2. CONSTRUCT 6" CURB (TYPE I) PER CITY STD. DWG. NO. 200.
3. CONSTRUCT 8" CURB (TYPE II) PER CITY STD. DWG. NO. 200.
4. CONSTRUCT PROPERTY LINE SIDEWALK PER CITY STD. DWG. NO. 325.
39. CONST. CATCH BASIN PER CITY STD. DWG. NO. 407, SIZE AS NOTED.

DATA TABLE

	CURVE/LINE	DELTA/BER'G	RADIUS	LENGTH	TANGENT
	①	68°08'24"	809.00	962.11	547.11
⚠	②	~~68°08'24"~~	~~843.00~~	~~1002.56~~	~~570.11~~
	③	68°08'24"	857.00	1019.20	579.57
	④	68°08'24"	891.00	1059.64	602.57
	⑤	REVERSE TAPER PER STD. DWG. 122 L=120' W: 10'			
⚠	⑥	N 27° 49' 47" E	—	40.37	—
	⑦	REVERSE TAPER PER STD. DWG. 122 L=120' W=10'			

Δ = 48° 35' 58" R= 843.00 L= 715.05 T= 380.62

40 20 0 40 80 120

SCALE IN FEET

RIVERWALK PARKWAY

AS BUILT

REGISTERED PROFESSIONAL ENGINEER JOHN W. CANTY No. 17550 Exp. 6-30-01 CIVIL STATE OF CALIFORNIA 11/21/00

Underground Service Alert
Call: TOLL FREE 1 - 800 227-2600
TWO WORKING DAYS BEFORE YOU DIG

PRIVATE ENGINEERING NOTE

CONSTRUCTION CONTRACTOR AGREES THAT IN ACCORDANCE WITH GENERALLY ACCEPTED CONSTRUCTION PRACTICES, CONSTRUCTION CONTRACTOR WILL BE REQUIRED TO ASSUME SOLE AND COMPLETE RESPONSIBILITY FOR JOB SITE CONDITIONS DURING THE COURSE OF CONSTRUCTION OF THE PROJECT, INCLUDING SAFETY OF ALL PERSONS AND PROPERTY; THAT THIS REQUIREMENT SHALL BE MADE TO APPLY CONTINUOUSLY AND NOT BE LIMITED TO NORMAL WORKING HOURS, AND CONSTRUCTION CONTRACTOR FURTHER AGREES TO DEFEND, INDEMNIFY AND HOLD DESIGN PROFESSIONAL HARMLESS FROM ANY AND ALL LIABILITY, REAL OR ALLEGED, IN CONNECTION WITH THE PERFORMANCE OF WORK ON THIS PROJECT, EXCEPTING LIABILITY ARISING FROM THE SOLE NEGLIGENCE OF DESIGN PROFESSIONAL.

REGISTERED PROFESSIONAL ENGINEER JOHN W. CANTY No. 17550 Exp. 6-30-01 CIVIL STATE OF CALIFORNIA

PREPARED UNDER THE DIRECTION OF: John W. Canty
REGISTERED CIVIL ENGINEER NO. 17550
EXPIRATION DATE: 6-30-01 DATE: 9/12/00

CEG CANTY ENGINEERING GROUP, INC.
CIVIL ENGINEERING – PLANNING – SURVEYING
2020 IOWA AVENUE, SUITE 102, P.O. BOX 52050, RIVERSIDE, CA 92517
TEL (909) 683 – 5234 FAX (909) 683 – 5301
CITY OF RIV. BUSINESS TAX ACCT. NO. 69372 EXP. DATE 04-07-00

SCALE: 1"=40' DATE: JULY 1999

BENCH MARK: CITY OF RIV. B.M. E2-M3, PK NAIL & CITY ENGINEER TAG IN N'LY C.B. WING, W'LY CURB OF PIERCE ST. 1300' S'LY OF AMBS DR. ELEV.=694.231

MARK	REVISIONS	APPR.	DATE
⚠	REVISED MEDIAN OPENING @ SIERRA VISTA PER FIELD	JWC	3/1/01

DESIGNED BY P.J.C. DRAWN BY C.C. CHECKED BY J.W.C.

CITY OF RIVERSIDE, CALIFORNIA
DEPARTMENT OF PUBLIC WORKS

	BY	DATE
APPROVED BY		
PRINCIPAL ENGR.		11/16/00
PARK DEPARTMENT		11/07/00
TRAFFIC DIVISION		11/20/00
P.W. ENGR. MGR.		11/16/00
ST. SERVICES		10/15

APPROVED BY
A. McBeath
DIRECTOR OF PUBLIC WORKS
DATE 11-21-00

IN THE CITY OF RIVERSIDE
LA SIERRA UNIVERSITY
STREET PLANS
RIVERWALK PARKWAY
STA. 64+00 TO 75+00
FOR: GRIFFIN INDUSTRIES

PROJECT NO. R-3561
SHEET 7 OF 14
FILE NO.: 1104-001

PC-4268-S/P

INDEXED 12-5-2000 LH

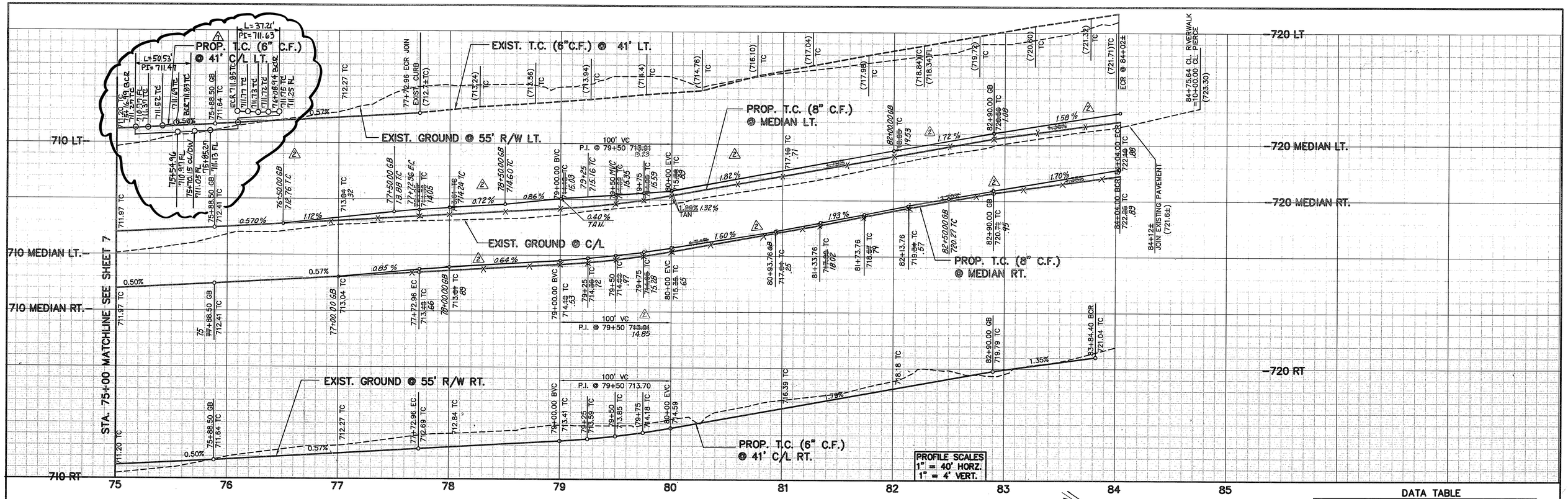

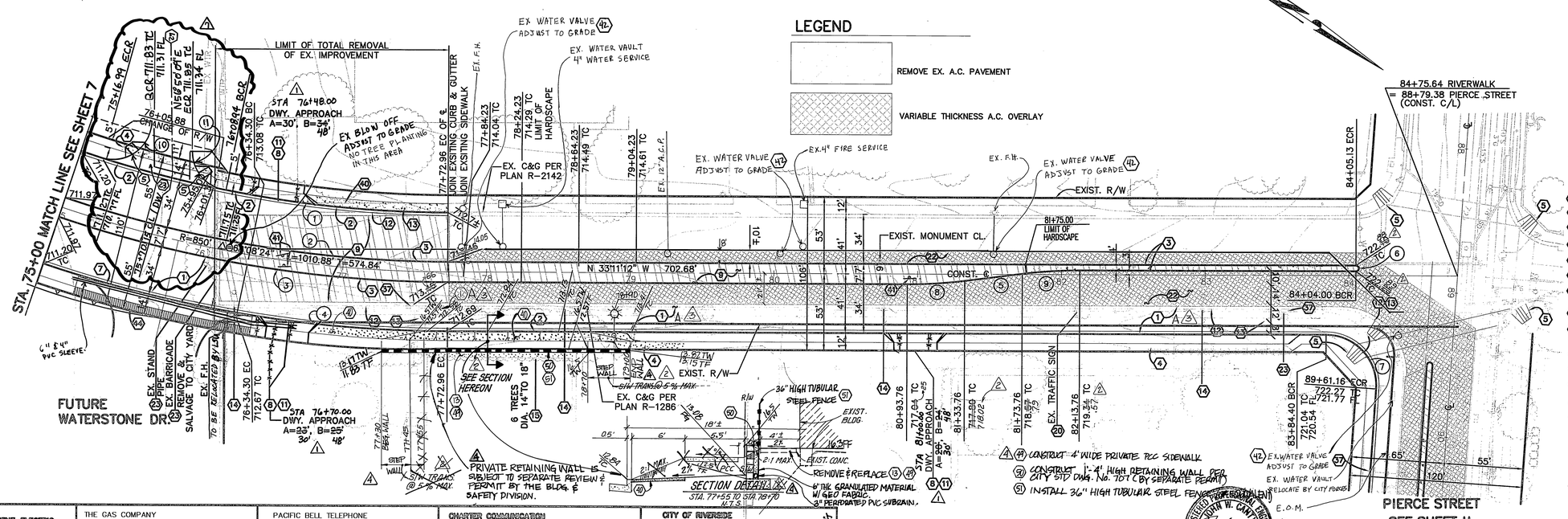

DATA TABLE

CURVE/LINE	DELTA/BER'G	RADIUS	LENGTH	TANGENT
①	68°08'24"	809.00	962.11	547.11
②	68°08'24"	843.00	1002.56	570.11
③	68°08'24"	857.00	1019.20	579.57
④	68°08'24"	891.00	1059.64	602.57
⑤	N40°20'21"E	–	40.31	–
⑥	180°00'00"	2.00	6.27	–
⑦	93°48'12"	35.00	57.30	37.40
⑧	REVERSE TAPER PER STD. DWG. NO. 122			
⑩	107°13'53"	27.00'	50.53	36.64
⑪	78°58'01"	27.00'	37.21	22.24

ⒹⒶ CONSTRUCT 6"AC OVER 12" CRUSH AGG. BASE PER TYP. SECTIONS STA. 77+72.96 TO PIERCE STREET.

CONSTRUCTION NOTES

1. CONSTRUCT 4" A.C. OVER 6" CRUSHED AGG. BASE PER TYP. SECTIONS
2. CONSTRUCT 6" CURB (TYPE I) PER CITY STD. DWG. NO. 200
3. CONSTRUCT 8" CURB (TYPE II) PER CITY STD. DWG. NO. 200
4. CONSTRUCT PROPERTY LINE SIDEWALK PER CITY STD. DWG. NO. 325.
5. CONSTRUCT WHEELCHAIR RAMPS PER CITY STD. DWG. NO. 304, (TYPE 1).
7. CONSTRUCT 6" A.C. BERM PER CITY STD. DWG. NO. 250 (TYPE I).
8. CONSTR. DRIVEWAY APPROACH (TYPE CURB-I) PER CITY STD. DWG. NO. 302 "A & "B" AS NOTED.
9. REMOVE EXIST. A.C. PAVEMENT.
11. REMOVE EXIST. DRIVE, REPLACE IN KIND TO JOIN EXIST GRADE ("A" & "B" TO BE DETERMINED IN THE FIELD BY CITY INSPECTOR).
12. REMOVE EXIST. CURB & GUTTER.
13. REMOVE EXIST. SIDEWALK.
14. RELOCATE EXSITING STREET LIGHT PER CITY OF RIVERSIDE PUBLIC UTILITIES DWG UOL5 604745.
15. REMOVE EXIST. TREES.
16. ~~RELOCATE F.H. BY OTHERS.~~
20. REMOVE/RELOCATE EX. TRAFFIC SIGN.
21. RELOCATE EXIST. TRAFFIC SIGNAL.
22. A.C. FEATHERING OVERLAY
23. REMOVE EXIST. (AS NOTED)
26. ~~RELOCATE EXISTING UTILITY FACILITY BY OTHER (AS NOTED)~~
32. INSTALL R10 (RT) SIGN PER CITY STD. DWG. 666
37. RELOCATE EXIST ELECTRICAL FACILITIES PER CITY OF RIVERSIDE PUBLIC UTILITES DWG UOL5-604745.
40. CONSTRUCT CURB SIDEWALK PER CITY STD. DWG. NO. 325.
41. CONSTRUCT "RIGHT TURN ONLY" SIGN PER CAL TRANS STANDARD R41
44. CONSTRUCT PROPERTY LINE AC SIDEWALK PER MODIFIED RIV. STD DWG. NO. 325.

△1 (27) INSTALL CROSS GUTTER PER CITY STD 220

CITY OF RIVERSIDE PUBLIC UTILITIES DEPARTMENT–ELECTRIC OVERHEAD & UNDERGROUND	THE GAS COMPANY	PACIFIC BELL TELEPHONE	CHARTER COMMUNICATION
APPROVED BY 9-13-00 DATE	APPROVED BY 9-13-00 DATE	APPROVED BY 9/14/00 DATE	APPROVED BY 9-13-00 DATE

CITY OF RIVERSIDE WATER DIVISION
APPROVED BY 11/2/00 DATE

Underground Service Alert
Call: TOLL FREE 1 – 800 227–2600
TWO WORKING DAYS BEFORE YOU DIG

PRIVATE ENGINEERING NOTE

CONSTRUCTION CONTRACTOR AGREES THAT IN ACCORDANCE WITH GENERALLY ACCEPTED CONSTRUCTION PRACTICES, CONSTRUCTION CONTRACTOR WILL BE REQUIRED TO ASSUME SOLE AND COMPLETE RESPONSIBILITY FOR JOB SITE CONDITIONS DURING THE COURSE OF CONSTRUCTION OF THE PROJECT, INCLUDING SAFETY OF ALL PERSONS AND PROPERTY; THAT THIS REQUIREMENT SHALL BE MADE TO APPLY CONTINUOUSLY AND NOT BE LIMITED TO NORMAL WORKING HOURS, AND CONSTRUCTION CONTRACTOR FURTHER AGREES TO DEFEND, INDEMNIFY AND HOLD DESIGN PROFESSIONAL HARMLESS FROM ANY AND ALL LIABILITY, REAL OR ALLEGED, IN CONNECTION WITH THE PERFORMANCE OF WORK ON THIS PROJECT, EXCEPTING LIABILITY

REGISTERED PROFESSIONAL ENGINEER JOHN W. CANTY No. 17550 Exp. 6-30-01 CIVIL STATE OF CALIFORNIA

PREPARED UNDER THE DIRECTION OF:
REGISTERED CIVIL ENGINEER NO. 17550
EXPIRATION DATE: 6-30-01 DATE: 9/12/00

CANTY ENGINEERING GROUP, INC.
CIVIL ENGINEERING – PLANNING – SURVEYING
2020 IOWA AVENUE, SUITE 102, P.O. BOX 52050, RIVERSIDE, CA 92517
TEL (909) 683 – 5234 FAX (909) 683 – 5301
CITY OF RIV. BUSINESS TAX ACCT. NO. 69372 EXP. DATE 04-07-00

SCALE: 1"=40' DATE: JULY 1999

BENCH MARK: CITY OF RIV. B.M. E2-M3, PK NAIL & CITY ENGINEER TAG IN N'LY C.B. WING, W'LY CURB OF PIERCE ST. 1300' S'LY OF AMBS DR.
ELEV.=694.231

MARK	REVISIONS	APPR.	DATE
1	REMOVE EX. CURB SIDEWALK & ADD DRWY PW07-0455 R/C	RJZ	11/6/67
4	REVISE SECTION DETAIL STA. 78+00 RT.	RJZ	4/4/62
5	REVISE RIVERWALK PAVEMENT SECTIONS	RJZ	2/26/02
6	ADD SECTION DETAIL – STA 78+00 RT, REV. MEDIAN PROF.	RJZ	12/21/01
7	REVISE DRIVEWAYS	RJZ	9/14/00

DESIGNED BY P.J.C. DRAWN BY C.C. CHECKED BY J.W.C.

CITY OF RIVERSIDE, CALIFORNIA
DEPARTMENT OF PUBLIC WORKS

	BY	DATE
APPROVED BY		APPROVED BY R. McGrath
PRINCIPAL ENGR.	JC	11/21/00
PARK DEPARTMENT	[illegible]	11/8/00
TRAFFIC DIVISION	JC	11/20/00
P.W. ENGR. MGR.	[illegible]	11/20/00
ST. SERVICES	[illegible]	11/15

DIRECTOR OF PUBLIC WORKS
DATE 11-21-00

IN THE CITY OF RIVERSIDE
LA SIERRA UNIVERSITY
STREET PLANS
RIVERWALK PARKWAY
STA. 75+00 TO PIERCE ST.
FOR: GRIFFIN INDUSTRIES

PROJECT NO. PW07-0455
R-3561
SHEET 8 OF 14
FILE NO.: 1104-001

PC-4268-S/P

INDEXED 12-5-2000 GH

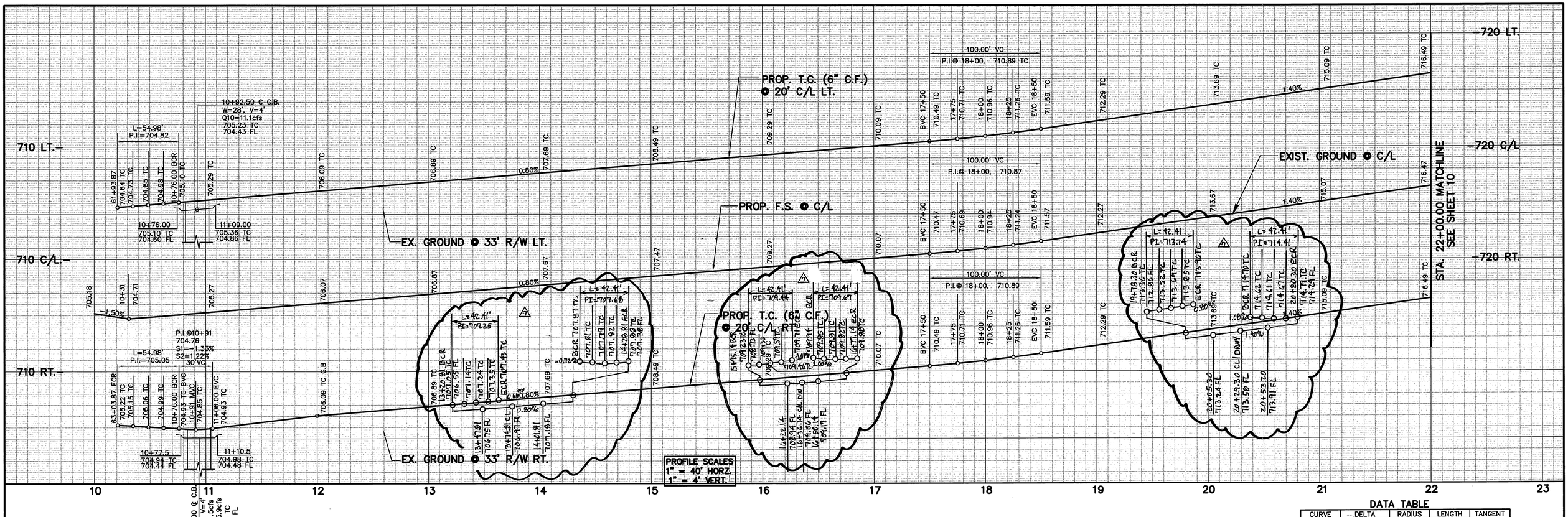

DATA TABLE

CURVE	DELTA	RADIUS	LENGTH	TANGENT
①	90°00'00"	35.00	54.98	35.00
②	90°00'00"	27.00'	42.41'	27.00'

CONSTRUCTION NOTES

1. CONSTRUCT 4" A.C. OVER 6" CRUSHED AGG. BASE PER TYP. SECTIONS
2. CONSTRUCT 6" CURB (TYPE I) PER CITY STD. DWG. NO. 200
5. CONSTRUCT WHEELCHAIR RAMPS PER CITY STD. DWG. NO. 304, (TYPE 1).
30. CONST. C.B. PER CITY STD. DWG. 405, SIZE AS NOTED
40. CONSTRUCT CURB SIDEWALK PER CITY STD. DWG. NO. 325.
23. REMOVE EXIST. (AS-NOTED)
27. INSTALL CROSS GUTTER PER CITY STD. 220
59. RELOCATE EXIST. STREET LIGHT (BY OTHERS)
57. CONSTRUCT 6' WIDE MEANDERING SIDEWALK PER CITY STD. DRWG. NO. 325 (MODIFIED W=6')

BUILT PER PLAN 5/4/06

40 20 0 40 80 120
SCALE IN FEET

REGISTERED PROFESSIONAL ENGINEER JOHN W. CANTY No. 17550 Exp. 6-30-01 CIVIL STATE OF CALIFORNIA
4/19/05

AS BUILT

Underground Service Alert
Call: TOLL FREE 1 – 800 227–2600
TWO WORKING DAYS BEFORE YOU DIG

PRIVATE ENGINEERING NOTE

CONSTRUCTION CONTRACTOR AGREES THAT IN ACCORDANCE WITH GENERALLY ACCEPTED CONSTRUCTION PRACTICES, CONSTRUCTION CONTRACTOR WILL BE REQUIRED TO ASSUME SOLE AND COMPLETE RESPONSIBILITY FOR JOB SITE CONDITIONS DURING THE COURSE OF CONSTRUCTION OF THE PROJECT, INCLUDING SAFETY OF ALL PERSONS AND PROPERTY; THAT THIS REQUIREMENT SHALL BE MADE TO APPLY CONTINUOUSLY AND NOT BE LIMITED TO NORMAL WORKING HOURS, AND CONSTRUCTION CONTRACTOR FURTHER AGREES TO DEFEND, INDEMNIFY AND HOLD DESIGN PROFESSIONAL HARMLESS FROM ANY AND ALL LIABILITY, REAL OR ALLEGED, IN CONNECTION WITH THE PERFORMANCE OF WORK ON THIS PROJECT, EXCEPTING LIABILITY ARISING FROM THE SOLE NEGLIGENCE OF DESIGN PROFESSIONAL.

REGISTERED PROFESSIONAL ENGINEER JOHN W. CANTY No. 17550 Exp. 6-30-01 CIVIL STATE OF CALIFORNIA

PREPARED UNDER THE DIRECTION OF:
REGISTERED CIVIL ENGINEER NO. 17550
EXPIRATION DATE: 6-30-01 DATE: 9/12/00

CBG CANTY ENGINEERING GROUP, INC.
CIVIL ENGINEERING – PLANNING – SURVEYING
2020 IOWA AVENUE, SUITE 102, P.O. BOX 52050, RIVERSIDE, CA 92517
TEL (909) 683 – 5234 FAX (909) 683 – 5301
CITY OF RIV. BUSINESS TAX ACCT. NO. 69372 EXP. DATE 04-07-00

SCALE: 1"=40' DATE: JULY 1999

BENCH MARK: CITY OF RIV. B.M. E2-M3, PK NAIL & CITY ENGINEER TAG IN N'LY C.B. WING, W'LY CURB OF PIERCE ST. 1300' S'LY OF AMBS DR. ELEV.=694.231

MARK	REVISIONS	APPR.	DATE
1	REMOVE EX. CURB & SIDEWALK & ADD DRWY PW07-0455	RJZ	11/16/07
1	ADDED DRIVEWAYS	RJZ	9-12-06

DESIGNED BY P.J.C. DRAWN BY P.J.C. CHECKED BY J.W.C.

CITY OF RIVERSIDE, CALIFORNIA
DEPARTMENT OF PUBLIC WORKS

APPROVED BY	BY	DATE
PRINCIPAL ENGR.		
PARK DEPARTMENT		
TRAFFIC DIVISION		
P.W. ENGR. MGR.		
ST. SERVICES		

APPROVED BY R. McGrath DIRECTOR OF PUBLIC WORKS DATE 11-21-00

IN THE CITY OF RIVERSIDE
LA SIERRA UNIVERSITY
STREET PLANS
SIERRA VISTA STREET
STA. 10+00 TO 22+00
FOR: GRIFFIN INSDUSTRIES

PROJECT NO. PW07-0455
R–3561
SHEET 9 OF 14
FILE NO.: 1104–001

PC-4268-S/P

AS BUILT 5/4/06

INDEXED 12-5-2000 GH

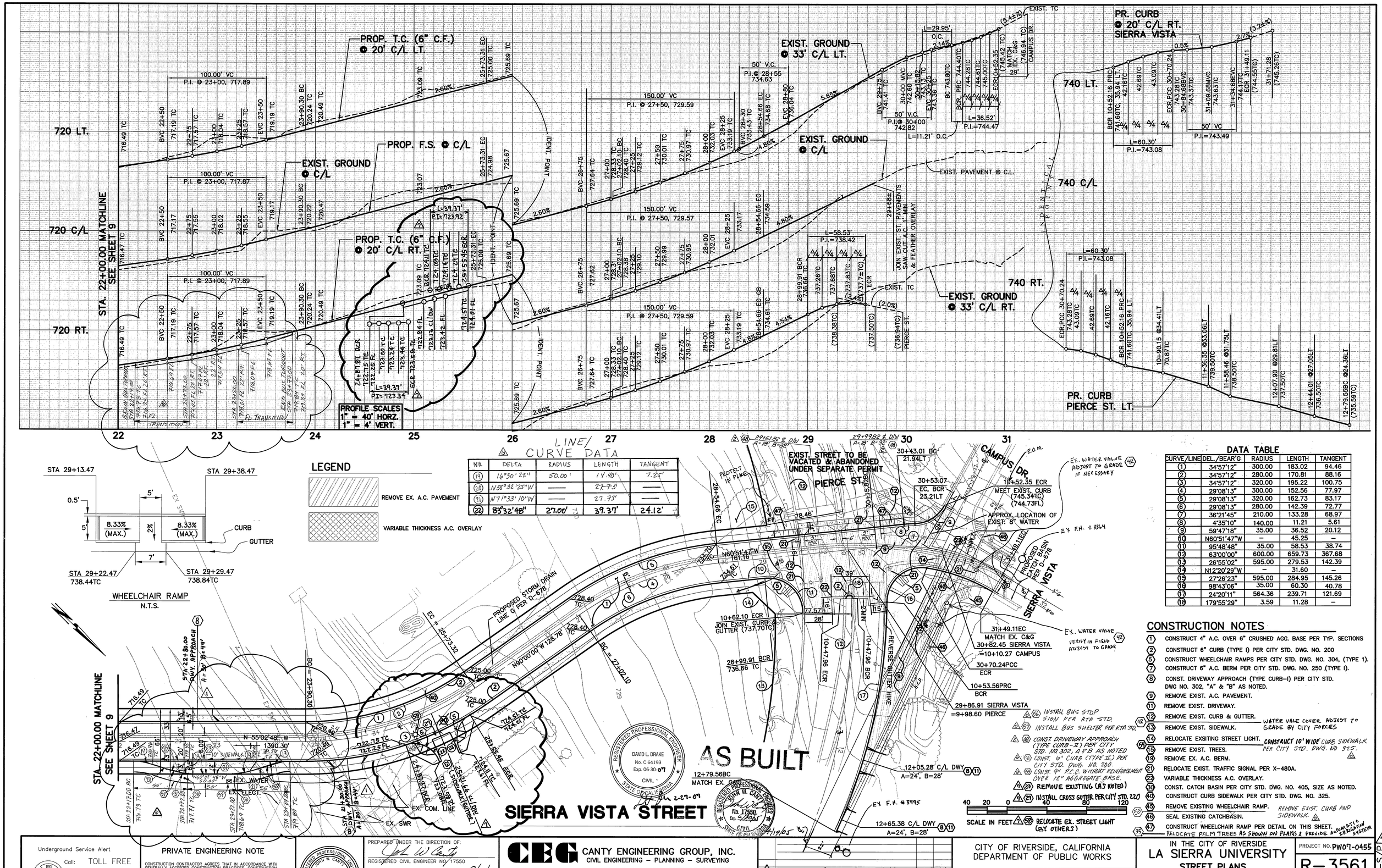

LINE/ CURVE DATA

NO.	DELTA	RADIUS	LENGTH	TANGENT
(19)	16°30' 22"	50.00'	14.40'	7.25'
(20)	N38°32'25"W	——	27.73'	——
(21)	N71°33' 10"W	——	27.73'	——
(22)	83°32'48"	27.00'	39.37'	24.12'

DATA TABLE

CURVE/LINE	DEL./BEAR'G	RADIUS	LENGTH	TANGENT
(1)	34°57'12"	300.00	183.02	94.46
(2)	34°57'12"	280.00	170.81	88.16
(3)	34°57'12"	320.00	195.22	100.75
(4)	29°08'13"	300.00	152.56	77.97
(5)	29°08'13"	320.00	162.73	83.17
(6)	29°08'13"	280.00	142.39	72.77
(7)	36°21'45"	210.00	133.28	68.97
(8)	4°35'10"	140.00	11.21	5.61
(9)	59°47'18"	35.00	36.52	20.12
(10)	N60°51'47"W	–	45.25	–
(11)	95°48'48"	35.00	58.53	38.74
(12)	63°00'00"	600.00	659.73	367.68
(13)	26°55'02"	595.00	279.53	142.39
(14)	N12°20'29"W	–	31.60	–
(15)	27°26'23"	595.00	284.95	145.26
(16)	98°43'06"	35.00	60.30	40.78
(17)	24°20'11"	564.36	239.71	121.69
(18)	179°55'29"	3.59	11.28	–

LEGEND

REMOVE EX. A.C. PAVEMENT

VARIABLE THICKNESS A.C. OVERLAY

STA 29+13.47 / STA 29+38.47 — 0.5' — 5' — 8.33% (MAX.) — 2% — 7' — CURB — GUTTER — STA 29+22.47 738.44TC — STA 29+29.47 738.84TC

WHEELCHAIR RAMP N.T.S.

CONSTRUCTION NOTES

1. CONSTRUCT 4" A.C. OVER 6" CRUSHED AGG. BASE PER TYP. SECTIONS
2. CONSTRUCT 6" CURB (TYPE I) PER CITY STD. DWG. NO. 200
5. CONSTRUCT WHEELCHAIR RAMPS PER CITY STD. DWG. NO. 304, (TYPE 1).
7. CONSTRUCT 6" A.C. BERM PER CITY STD. DWG. NO. 250 (TYPE I).
8. CONST. DRIVEWAY APPROACH (TYPE CURB–I) PER CITY STD. DWG NO. 302, "A" & "B" AS NOTED.
9. REMOVE EXIST. A.C. PAVEMENT.
11. REMOVE EXIST. DRIVEWAY.
12. REMOVE EXIST. CURB & GUTTER.
13. REMOVE EXIST. SIDEWALK.
14. RELOCATE EXSITING STREET LIGHT. CONSTRUCT 10' WIDE CURB SIDEWALK PER CITY STD. DWG. NO 325.
15. REMOVE EXIST. TREES.
19. REMOVE EX. A.C. BERM.
21. RELOCATE EXIST. TRAFFIC SIGNAL PER X-480A.
22. VARIABLE THICKNESS A.C. OVERLAY.
30. CONST. CATCH BASIN PER CITY STD. DWG. NO. 405, SIZE AS NOTED.
40. CONSTRUCT CURB SIDEWALK PER CITY STD. DWG. NO. 325.
45. REMOVE EXISTING WHEELCHAIR RAMP.
46. SEAL EXISTING CATCHBASIN.
47. CONSTRUCT WHEELCHAIR RAMP PER DETAIL ON THIS SHEET.
(35) RELOCATE PALM TREES AS SHOWN ON PLANS & PROVIDE AUTOMATIC IRRIGATION SYSTEM

(42) WATER VALE COVER. ADJUST TO GRADE BY CITY FORCES

(50) REMOVE EXIST. CURB AND SIDEWALK.

(55) RELOCATE EX. STREET LIGHT (BY OTHERS)

(68) INSTALL BUS STOP SIGN PER RTA STD.

(67) INSTALL BUS SHELTER PER RTA STD.

(69) CONST. DRIVEWAY APPROACH (TYPE CURB–II) PER CITY STD. NO 302, A&B AS NOTED

(51) CONST. 9" CURB (TYPE II) PER CITY STD. DWG. NO. 200.

(52) CONST. 9" P.C.C. WITHOUT REINFORCEMENT OVER 12" AGGREGATE BASE.

(23) REMOVE EXISTING (AS NOTED)

(27) INSTALL CROSS GUTTER PER CITY STD. 220

SCALE IN FEET: 40 20 0 40 80 120

AS BUILT

12+79.56BC MATCH EX. C&G

DAVID L. DRAKE No. C 64193 Exp. 06-30-07 CIVIL — REGISTERED PROFESSIONAL ENGINEER — STATE OF CALIFORNIA

JOHN W. CANTY No. 17550 Exp. 6-30-01 CIVIL — REGISTERED PROFESSIONAL ENGINEER — STATE OF CALIFORNIA

Underground Service Alert
Call: TOLL FREE 1 – 800 227–2600
TWO WORKING DAYS BEFORE YOU DIG

PRIVATE ENGINEERING NOTE

CONSTRUCTION CONTRACTOR AGREES THAT IN ACCORDANCE WITH GENERALLY ACCEPTED CONSTRUCTION PRACTICES, CONSTRUCTION CONTRACTOR WILL BE REQUIRED TO ASSUME SOLE AND COMPLETE RESPONSIBILITY FOR JOB SITE CONDITIONS DURING THE COURSE OF CONSTRUCTION OF THE PROJECT, INCLUDING SAFETY OF ALL PERSONS AND PROPERTY; THAT THIS REQUIREMENT SHALL BE MADE TO APPLY CONTINUOUSLY AND NOT BE LIMITED TO NORMAL WORKING HOURS, AND CONSTRUCTION CONTRACTOR FURTHER AGREES TO DEFEND, INDEMNIFY AND HOLD DESIGN PROFESSIONAL HARMLESS FROM ANY AND ALL LIABILITY, REAL OR ALLEGED, IN CONNECTION WITH THE PERFORMANCE OF WORK ON THIS PROJECT, EXCEPTING LIABILITY ARISING FROM THE SOLE NEGLIGENCE OF DESIGN PROFESSIONAL.

PREPARED UNDER THE DIRECTION OF: John W Canty
REGISTERED CIVIL ENGINEER NO. 17550
EXPIRATION DATE: 6-30-01 DATE: 9/19/00
CITY OF RIVERSIDE WATER DIVISION
Richard L. Durbin 11/2/00
APPROVED DATE

CEG CANTY ENGINEERING GROUP, INC.
CIVIL ENGINEERING – PLANNING – SURVEYING
2020 IOWA AVENUE, SUITE 102, P.O. BOX 52050, RIVERSIDE, CA 92517
TEL (909) 683 – 5234 FAX (909) 683 – 5301
CITY OF RIV. BUSINESS TAX ACCT. NO. 69372 EXP. DATE 04–07–00

SCALE: 1"=40' DATE: JULY 1999

BENCH MARK: CITY OF RIV. B.M. E2–M3, PK NAIL & CITY ENGINEER TAG IN N'LY C.B. WING, W'LY CURB OF PIERCE ST. 1300' S'LY OF AMBS DR. ELEV.=694.231

MARK	REVISIONS	APPR.	DATE
1	REMOVE EX. CURB/SIDEWALK & ADD DRWY PW07-0455 BC		11/16/07
2	ADD BUS STOP TURNOUT	RVZ	11/27/07
3	ADD DRIVEWAY & CONST NOTE #69	RVZ	12/26/07
4	ADD DRIVEWAYS	RVZ	4/16/08

DESIGNED BY P.J.C. DRAWN BY P.J.C. CHECKED BY J.W.C.

CITY OF RIVERSIDE, CALIFORNIA
DEPARTMENT OF PUBLIC WORKS

	BY	DATE
APPROVED BY		
PRINCIPAL ENGR.		11/20/00
PARK DEPARTMENT		11/24/00
TRAFFIC DIVISION		11/20/00
P.W. ENGR. MGR.		11/21/00
ST. SERVICES		11/15

APPROVED BY R. McGrath
DIRECTOR OF PUBLIC WORKS
DATE 11-21-00

IN THE CITY OF RIVERSIDE
LA SIERRA UNIVERSITY STREET PLANS
SIERRA VISTA STREET
STA. 22+00.00 TO PIERCE ST.
FOR: GRIFFIN INDUSTRIES

PROJECT NO. PW07-0455
R–3561
SHEET 10 OF 14
FILE NO.: 1104–001
PC–4268–S/P 1

INDEXED 12-5-2000 LH

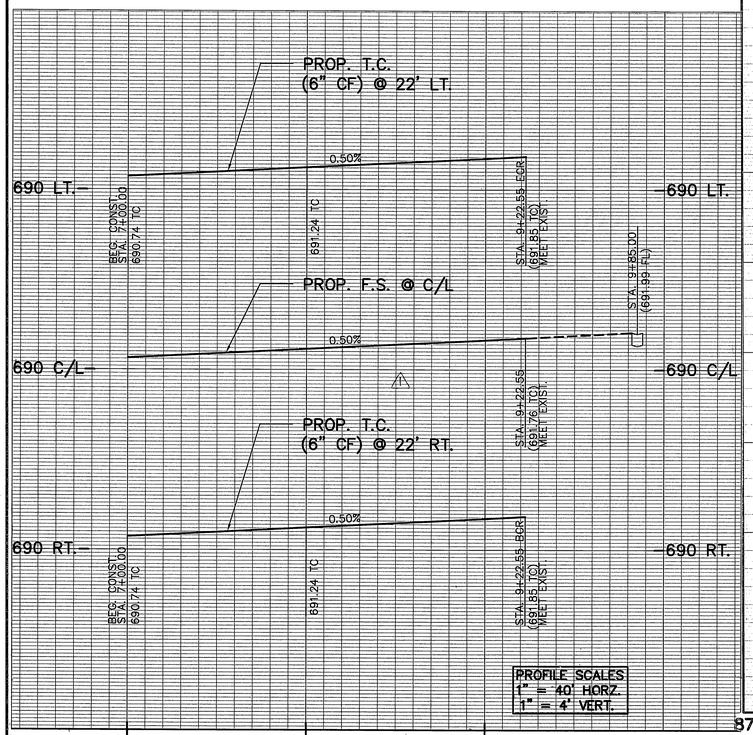

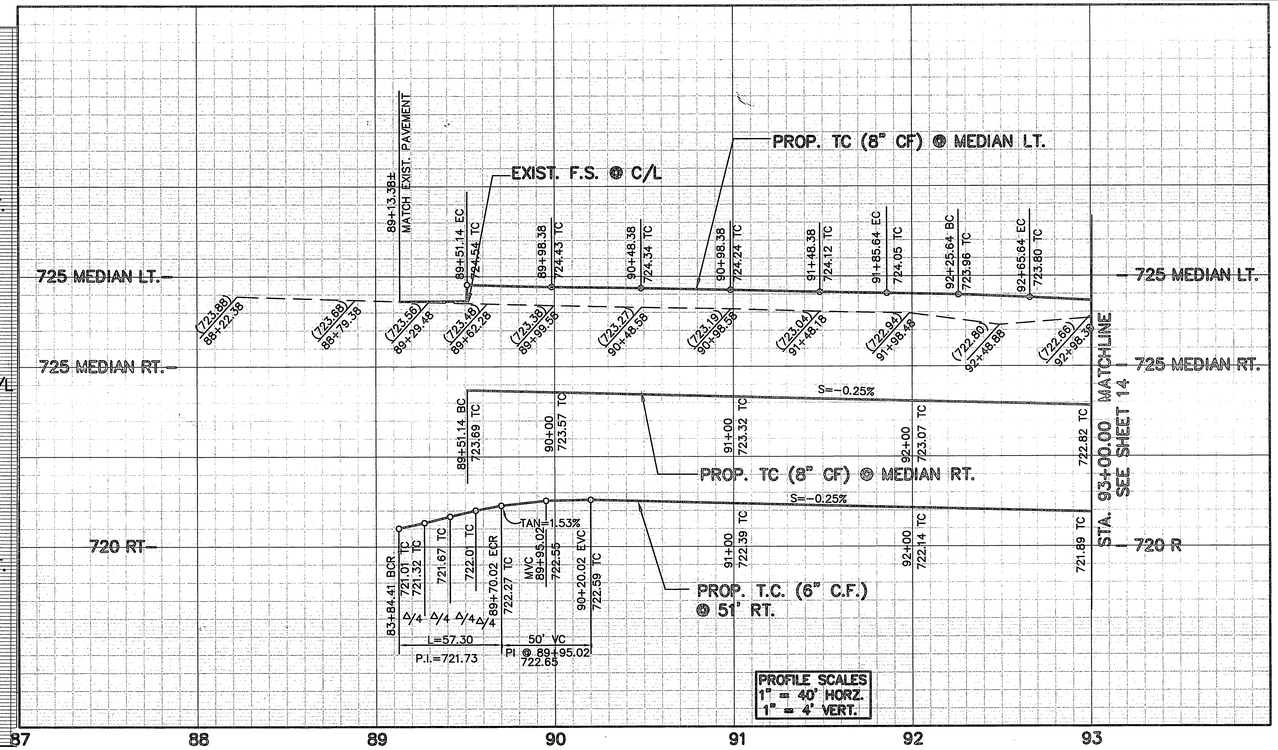

LEGEND

VARIABLE THICKNESS A.C. OVERLAY

REMOVE EX. A.C. PAVEMENT

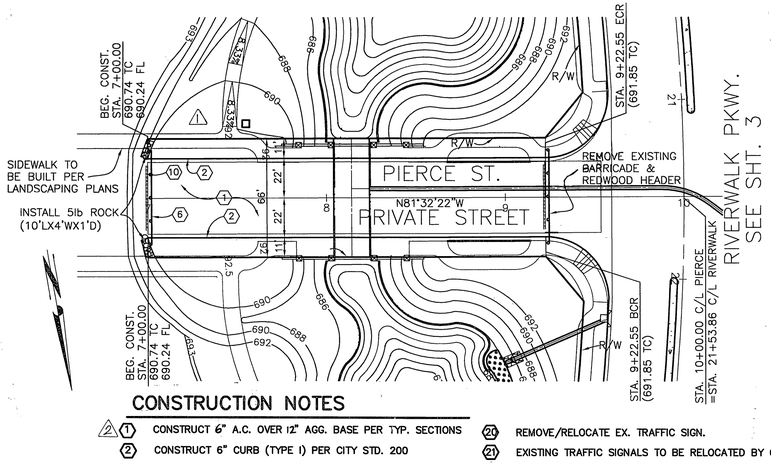

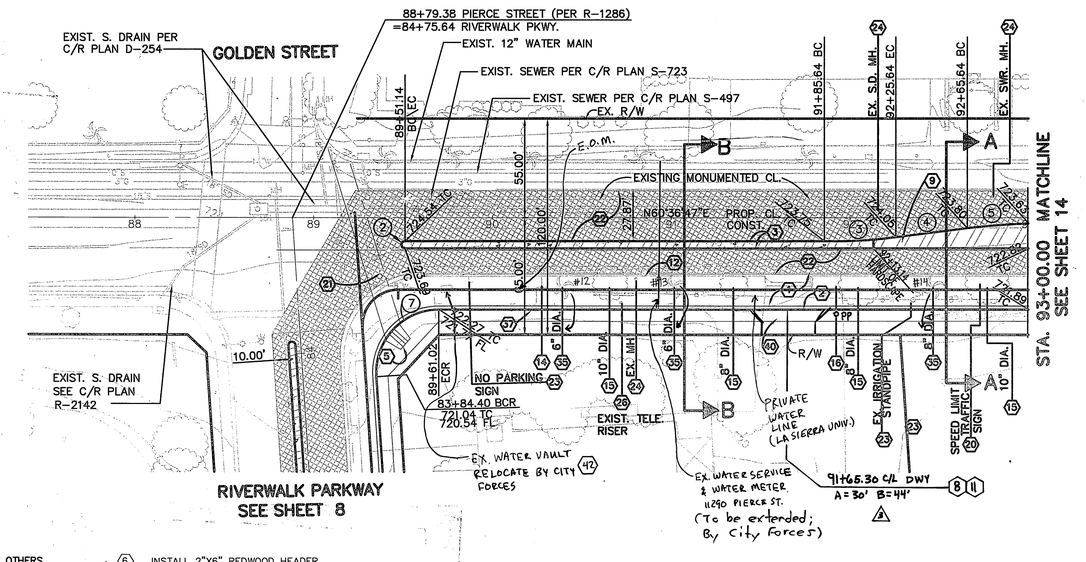

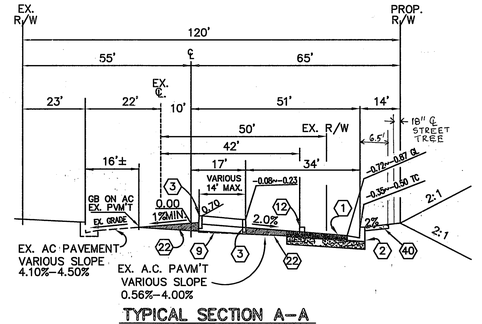

TYPICAL SECTION A-A

STA 91+84.64~STA. 93+00.00

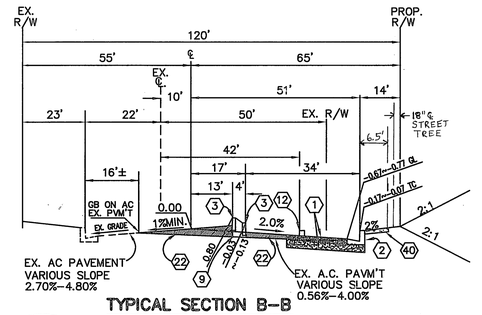

TYPICAL SECTION B-B

STA 89+37.64~STA. 91+85.64

CONSTRUCTION NOTES

1. CONSTRUCT 6" A.C. OVER 12" AGG. BASE PER TYP. SECTIONS
2. CONSTRUCT 6" CURB (TYPE I) PER CITY STD. 200
3. CONSTRUCT 6" CURB (TYPE II) PER CITY STD. 200
5. CONSTRUCT WHEELCHAIR RAMPS PER CITY STD. 304 (TYPE I).
9. REMOVE EXIST. A.C. PAVEMENT.
12. REMOVE EXIST. CURB & GUTTER
13. REMOVE EXIST. SIDEWALK
14. RELOCATE EXISTING POLE BY CITY FORCES
15. REMOVE EXIST. TREES
16. RELOCATE EXSITING POWER POLE BY OTHERS.
20. REMOVE/RELOCATE EX. TRAFFIC SIGN.
21. EXISTING TRAFFIC SIGNALS TO BE RELOCATED BY OTHERS
22. VARIABLE THICKNESS A.C. OVERLAY.
23. REMOVE EXISTING (AS NOTED ON PLAN)
24. ADJUST EXSITING MH/UTILTY VAULT TO GRADE (AS NOTED ON PLAN)
26. RELOCATE EXISTING UTILITY FACILITY BY OTHER (AS NOTED)
35. RELOCATE PALM TREES AS SHOWN ON PLANS & PROVIDE AUTOMATIC IRRIGATION SYSTEM
37. RELOCATE EXIST ELECTRICAL FACILITIES PER CITY OF RIVERSIDE PUBLIC UTILITES DWG U0L5-604745.
40. CONSTRUCT CURB SIDEWALK PER CITY STD. 325.
42. ~~WATER VALVE; ADJUST TO GRADE BY CITY FORCES.~~ EX. WATER VAULT (RELOCATE; BY CITY FORCES)

6. INSTALL 2"X6" REDWOOD HEADER
10. CONSTRUCT BARRICADE PER CITY STD. DWG. NO. 180
8. CONST. DRIVEWAY APPROACH (TYPE CURB-I) PER CITY STD. DWG NO. 302, "A" & "B" AS NOTED.
11. REMOVE EXIST. DRIVEWAY.

CITY OF RIVERSIDE
WATER DIVISION

Richard L. Drabek 11/2/00
APPROVED BY DATE

DATA TABLE

CURVE/LINE	DELTA/BER'G	RADIUS	LENGTH	TANGENT
1	93°48'12"	35.00	57.30	37.40
2	180°00'00"	2.00	6.27	-
3	REVERSE TAPER PER STD. DWG. NO. 122 L=120 W=10			
4	N53°27'50"E	-	40.31	-
5	REVERSE TAPER PER STD. DWG. NO. 122 L=120 W=10			
7	93°48'12"	35.00	57.30	37.40

PIERCE STREET

AS BUILT

JOHN W. CANTY No. 17550 Exp. 6-30-01 CIVIL STATE OF CALIFORNIA 11/1/05

SCALE IN FEET: 40 20 0 40 80 120

Underground Service Alert
Call: TOLL FREE 1 - 800 227-2600
TWO WORKING DAYS BEFORE YOU DIG

PRIVATE ENGINEERING NOTE

CONSTRUCTION CONTRACTOR AGREES THAT IN ACCORDANCE WITH GENERALLY ACCEPTED CONSTRUCTION PRACTICES, CONSTRUCTION CONTRACTOR WILL BE REQUIRED TO ASSUME SOLE AND COMPLETE RESPONSIBILITY FOR JOB SITE CONDITIONS DURING THE COURSE OF CONSTRUCTION OF THE PROJECT, INCLUDING SAFETY OF ALL PERSONS AND PROPERTY; THAT THIS REQUIREMENT SHALL BE MADE TO APPLY CONTINUOUSLY AND NOT BE LIMITED TO NORMAL WORKING HOURS; AND CONSTRUCTION CONTRACTOR FURTHER AGREES TO DEFEND, INDEMNIFY AND HOLD DESIGN PROFESSIONAL HARMLESS FROM ANY AND ALL LIABILITY, REAL OR ALLEGED, IN CONNECTION WITH THE PERFORMANCE OF WORK ON THIS PROJECT, EXCEPTING LIABILITY ARISING FROM THE SOLE NEGLIGENCE OF DESIGN PROFESSIONAL.

REGISTERED PROFESSIONAL ENGINEER JOHN W. CANTY No. 17550 Exp. 6-30-01 CIVIL STATE OF CALIFORNIA

PREPARED UNDER THE DIRECTION OF:
John W. Canty
REGISTERED CIVIL ENGINEER NO. 17550
EXPIRATION DATE: 6-30-01 DATE: 9/26/00

CBG CANTY ENGINEERING GROUP, INC.
CIVIL ENGINEERING – PLANNING – SURVEYING
2020 IOWA AVENUE, SUITE 102, P.O. BOX 52050, RIVERSIDE, CA 92517
TEL (909) 683 – 5234 FAX (909) 683 – 5301
CITY OF RIV. BUSINESS TAX ACCT. NO. 69372 EXP. DATE 04-07-00

SCALE: 1"=40' DATE: JULY 1999

BENCH MARK:
CITY OF RIV. B.M. E2-M3, PK NAIL & CITY ENGINEER TAG IN N'LY C.B. WING, W'LY CURB OF PIERCE ST. 1300' S'LY OF AMBS DR.
ELEV.=694.231

MARK	REVISIONS	APPR.	DATE
3	ADD DRIVEWAY	JWC	3/16/01
2	REVISE PIERCE STREET PAVEMENT SECTION	JWC	2/26/01
1	EXTEND PIERCE ST. (PRIVATE) E/O RIVERWALK PKWY.	JWC	4/4/00

DESIGNED BY P.J.C. DRAWN BY C.C. CHECKED BY J.W.C.

CITY OF RIVERSIDE, CALIFORNIA
DEPARTMENT OF PUBLIC WORKS

	BY	DATE
APPROVED BY		
PRINCIPAL ENGR.		11/21/00
PARK DEPARTMENT		11/03/00
TRAFFIC DIVISION		11/20/00
P.W. ENGR. MGR.		11/21/00
ST. SERVICES		11/21/00

APPROVED BY
R. Mc Heath
DIRECTOR OF PUBLIC WORKS
DATE 11/21/00

IN THE CITY OF RIVERSIDE
LA SIERRA UNIVERSITY
STREET PLANS
PIERCE STREET
STA.88+79.38 TO 93+00.00
FOR: GRIFFIN INDUSTRIES

PROJECT NO. R-3561
SHEET 11 OF 14
FILE NO.: 1104-001

PC-4268-S/P

INDEXED 12-5-2000 LH

PROP. T.C. (6" C.F.) ⊙ 22' C/L LT.

PROP. FL ⊙ X-Gutter

PROP. F.S. ⊙ C/L

PROP. T.C. (6" C.F.) ⊙ 22' C/L RT.

EXIST. TOP OF BERM ⊙ 41' LT.

EX. GROUND ⊙ R/W LT.

EX. GROUND ⊙ C/L

EX. GROUND ⊙ E.P. RT.

EX. GROUND ⊙ R/W RT.

690 LT

690 C/L

690 RT

700 LT

700 C/L

700 RT

10 11 12 13 14 15 16 17 18

PROFILE SCALES
1" = 40' HORZ.
1" = 4' VERT.

CURB RETURN PROFILES
D/W @ 14+25.20

RIVERWALK PARKWAY
SEE SHEET 3

PIERCE STREET
SEE SHEET 13

SEE SHEET 13 FOR DETAIL OF EXIST. IMPROVEMENT REMOVAL

RIVERWALK PARKWAY
SEE SHEET 3

PIERCE STREET

DATA TABLE

CURVE/LINE	DELTA/BER'G	RADIUS	LENGTH	TANGENT
1	47°12'58"	300.00	247.22	131.12
2	~~38°40'42"~~	~~322.00~~	~~217.37~~	~~113.01~~
3	47°12'58"	278.00	229.09	121.50
4	87°26'23"	35.00	53.41	33.47
5	90°00'00"	35.00	54.98	35.00
6	81°27'44"	35.00	49.76	30.14
7	28°07'49"	45.00	22.09	11.27
8	05°39'28"	322.00	31.80	15.91
9	84°01'50"	27.00	39.60	24.32
10	83°05'17"	27.00	39.15	23.92

CONSTRUCTION NOTES

1. CONSTRUCT 4" A.C. OVER 6" CRUSHED AGG. BASE PER TYP. SECTIONS
2. CONSTRUCT 6" CURB (TYPE I) PER CITY STD. DWG. NO. 200
3. CONSTRUCT 8" CURB (TYPE II) PER CITY STD. DWG. NO. 200
5. CONSTRUCT WHEELCHAIR RAMPS PER CITY STD. DWG. NO. 304, (TYPE 1).
7. CONSTRUCT 6" A.C. BERM PER CITY STD. DWG. NO. 250 (TYPE I).
8. CONST. DRIVEWAY APPROACH (TYPE CURB-I) PER CITY STD. DWG NO. 302, "A" & "B" AS NOTED.
9. REMOVE EXIST. A.C. PAVEMENT.
10. CONSTRUCT BARRICADE PER CITY STD. DWG. NO. 180.
12. REMOVE EXIST. CURB & GUTTER.
13. REMOVE EXIST. SIDEWALK.
22. VARIABLE THICKNESS A.C. OVERLAY
27. INSTALL CROSS GUTTER AND SPANDREL PER CITY STD. DWG. NO. 220
28. CONSTRUCT WHEEL CHAIR RAMP PER CITY STD. DWG. NO. 304, TYPE II
29. BUILD A.C. SWALE PER DETAIL ON SHEET 3
30. CONST. CATCH BASIN PER CITY STD. DWG. NO. 405, SIZE AS NOTED.
33. INSTALL R1 STOP SIGIN PER CALTRANS STD.
36. CONST. 6" CONCRETE DRIVE.
40. CONSTRUCT CURB SIDEWALK PER CITY STD. DWG. NO. 325.
43. CONSTRUCT MODIFIED UNDER SIDEWALK DRAIN PER CITY STD. DWG NO. 411, W = 4'
42. WATER VALVE; ADJUST TO GRADE BY CITY FORCES.
47. CONST. WHEELCHAIR RAMP PER CITY STD. DWG. NO. 304 (TYPE III)

TYPICAL SECTION A-A

STA. 14+60~STA. 16+57

LEGEND

REMOVE EX. A.C. PAVEMENT

VARIABLE THICKNESS A.C. OVERLAY

SCALE IN FEET: 40 20 0 40 80 120

AS BUILT

Underground Service Alert
Call: TOLL FREE 1 - 800 227-2600
TWO WORKING DAYS BEFORE YOU DIG

PRIVATE ENGINEERING NOTE

CONSTRUCTION CONTRACTOR AGREES THAT IN ACCORDANCE WITH GENERALLY ACCEPTED CONSTRUCTION PRACTICES, CONSTRUCTION CONTRACTOR WILL BE REQUIRED TO ASSUME SOLE AND COMPLETE RESPONSIBILITY FOR JOB SITE CONDITIONS DURING THE COURSE OF CONSTRUCTION OF THE PROJECT, INCLUDING SAFETY OF ALL PERSONS AND PROPERTY; THAT THIS REQUIREMENT SHALL BE MADE TO APPLY CONTINUOUSLY AND NOT BE LIMITED TO NORMAL WORKING HOURS, AND CONSTRUCTION CONTRACTOR FURTHER AGREES TO DEFEND, INDEMNIFY AND HOLD DESIGN PROFESSIONAL HARMLESS FROM ANY AND ALL LIABILITY, REAL OR ALLEGED, IN CONNECTION WITH THE PERFORMANCE OF WORK ON THIS PROJECT, EXCEPTING LIABILITY ARISING FROM THE SOLE NEGLIGENCE OF DESIGN PROFESSIONAL.

REGISTERED PROFESSIONAL ENGINEER — JOHN W. CANTY — No. 17550 — Exp. 6-30-01 — CIVIL — STATE OF CALIFORNIA

PREPARED UNDER THE DIRECTION OF:
REGISTERED CIVIL ENGINEER NO. 17550
EXPIRATION DATE: 6-30-01 DATE: 9/12/00
CITY OF RIVERSIDE
WATER DIVISION
APPROVED DATE 11/2/00

CANTY ENGINEERING GROUP, INC.
CIVIL ENGINEERING — PLANNING — SURVEYING
2020 IOWA AVENUE, SUITE 102, P.O. BOX 52050, RIVERSIDE, CA 92517
TEL (909) 683 - 5234 FAX (909) 683 - 5301
CITY OF RIV. BUSINESS TAX ACCT. NO. 69372 EXP. DATE 04-07-00

SCALE: 1"=40'
DATE: JULY 1999
BENCH MARK:
CITY OF RIV. B.M. E2-M3, PK NAIL & CITY ENGINEER TAG IN N'LY C.B. WING, W'LY CURB OF PIERCE ST. 1300' S'LY OF AMBS DR.
ELEV.=694.231

MARK	REVISIONS	APPR.	DATE
1	REV. D/W @ STA. 14+25.20	FOR	12/12/00

DESIGNED BY P.J.C. DRAWN BY C.C. CHECKED BY J.W.C.

CITY OF RIVERSIDE, CALIFORNIA
DEPARTMENT OF PUBLIC WORKS

	BY	DATE
APPROVED BY		
PRINCIPAL ENGR.		
PARK DEPARTMENT		11/04/00
TRAFFIC DIVISION		11/24/00
CHIEF P.W. ENGR.		11/29/00
ST. SERVICES		10/15

APPROVED BY R. McGrath
DIRECTOR OF PUBLIC WORKS
DATE 11-21-00

IN THE CITY OF RIVERSIDE
LA SIERRA UNIVERSITY
STREET PLANS
PIERCE STREET(EAST)
STA. 10+00 TO 17+00
FOR: GRIFFIN INDUSTRIES

PROJECT NO. R-3561
SHEET 12 OF 14
FILE NO.: 1104-001

PC-4268-S/P

INDEXED 12-5-2000 LH

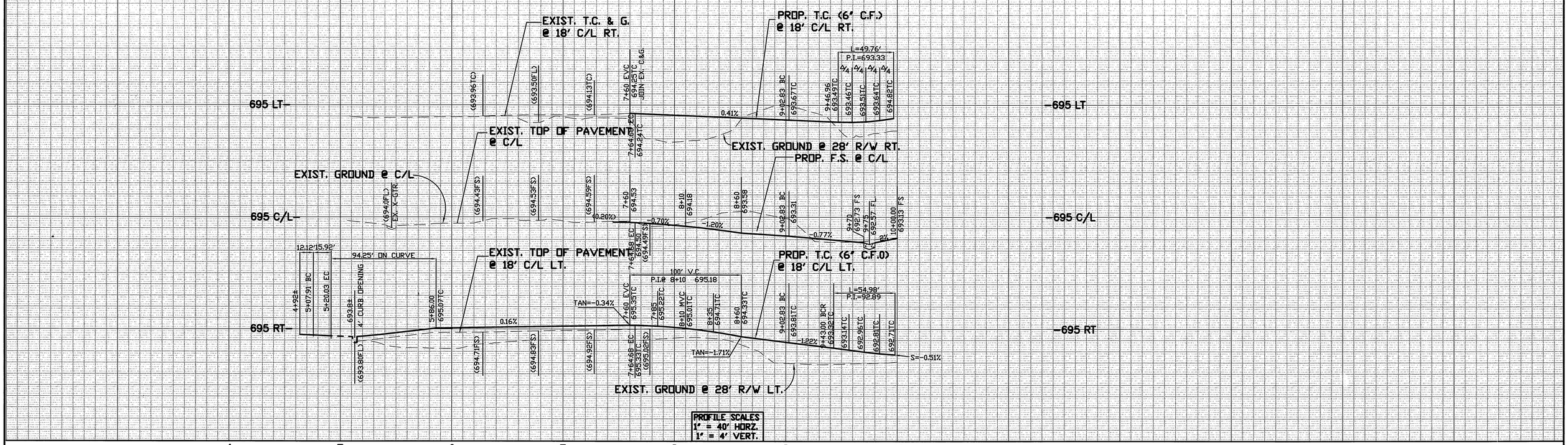

DATA TABLE

CURVE/LINE	DELTA/BER'G	RADIUS	LENGTH	TANGENT
①	42°47'02"	185.00	138.14	72.47
②	42°47'02"	203.00	151.58	79.52
③	42°47'02"	167.00	124.70	65.42
④	81°27'44"	35.00	49.76	30.14
⑤	90°00'00"	35.00	54.98	35.00
⑥	90°00'00"	42.00	65.97	42.00
⑦	90°00'00"	60.00	94.25	60.00
⑧	18°14'26"	50.00	15.92	8.03
⑨	S55°40'36"W		12.12	

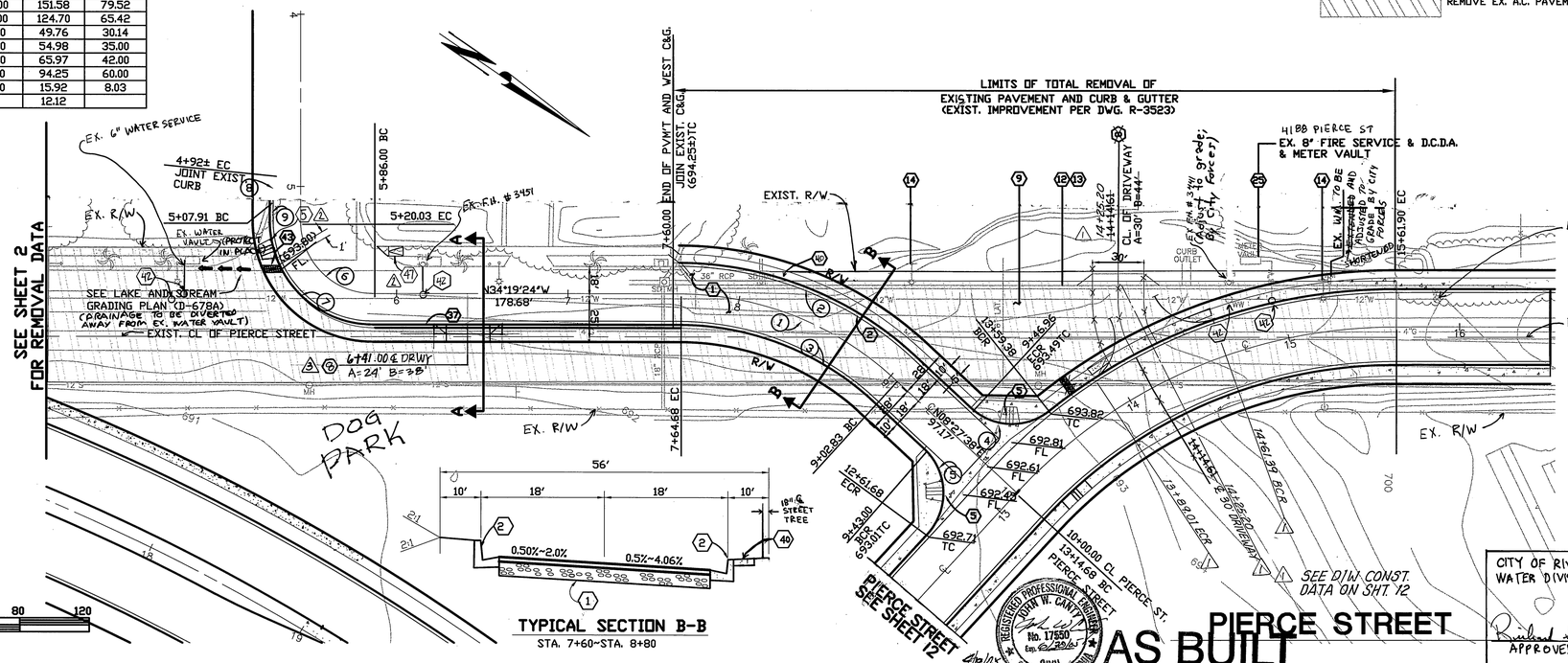

LEGEND

REMOVE EX. A.C. PAVEMENT

CONSTRUCTION NOTES

1. CONSTRUCT 4" A.C. OVER 6" CRUSHED AGG. BASE PER TYP. SECTIONS
2. CONSTRUCT 6" CURB (TYPE D) PER CITY STD. DWG. NO. 200
4. CONSTRUCT PROPERTY LINE SIDEWALK PER CITY STD. DWG. NO. 325.
5. CONSTRUCT WHEELCHAIR RAMPS PER CITY STD. DWG. NO. 304, (TYPE D).
7. CONSTRUCT 6" A.C. BERM PER CITY STD. DWG. NO. 250 (TYPE D).
8. CONST. DRIVEWAY APPROACH (TYPE CURB-D PER CITY STD. DWG NO. 302, 'A' & 'B' AS NOTED.
9. REMOVE EXIST. A.C. PAVEMENT.
10. CONSTRUCT BARRICADE PER CITY STD. DWG. NO. 180.
11. REMOVE EXIST. DRIVE, REPLACE IN KIND TO JOIN EXIST GRADE ('A' & 'B' TO BE DETERMINED IN THE FIELD BY CITY INSPECTOR).
12. REMOVE EXIST. CURB & GUTTER.
13. REMOVE EXIST. SIDEWALK.
14. RELOCATE EXISTING STREET LIGHT.
18. ADJUST TO GRADE; BY CITY FORCES
25. PROTECT EXIST. UTILITIES ON SITE.
43. CONSTRUCT MODIFIED UNDER SIDEWALK DRAIN PER CITY STD. DWG NO. 411, W = 4'
46. CONSTRUCT CURB SIDEWALK PER CITY STD. DWG. NO. 325
42. WATER VALVE COVER TO BE ADJUSTED TO GRADE BY CITY FORCES
47. CONST. WHEELCHAIR RAMP PER CITY STD. DWG. NO. 304, TYPE III.

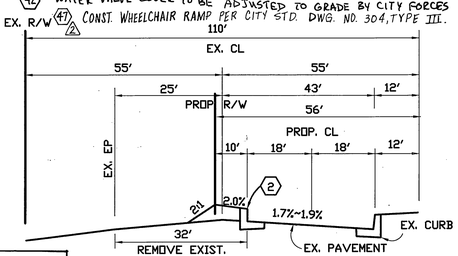

TYPICAL SECTION A-A
STA. 5+86~STA. 7+60

CITY OF RIVERSIDE
WATER DIVISION

Richard S. Durbin — APPROVED BY — 11/2/00 DATE

Underground Service Alert
Call: TOLL FREE 1 - 800 227-2600
TWO WORKING DAYS BEFORE YOU DIG

PRIVATE ENGINEERING NOTE

CONSTRUCTION CONTRACTOR AGREES THAT IN ACCORDANCE WITH GENERALLY ACCEPTED CONSTRUCTION PRACTICES, CONSTRUCTION CONTRACTOR WILL BE REQUIRED TO ASSUME SOLE AND COMPLETE RESPONSIBILITY FOR JOB SITE CONDITIONS DURING THE COURSE OF CONSTRUCTION OF THE PROJECT, INCLUDING SAFETY OF ALL PERSONS AND PROPERTY; THAT THIS REQUIREMENT SHALL BE MADE TO APPLY CONTINUOUSLY AND NOT BE LIMITED TO NORMAL WORKING HOURS, AND CONSTRUCTION CONTRACTOR FURTHER AGREES TO DEFEND, INDEMNIFY AND HOLD DESIGN PROFESSIONAL HARMLESS FROM ANY AND ALL LIABILITY, REAL OR ALLEGED, IN CONNECTION WITH THE PERFORMANCE OF WORK ON THIS PROJECT, EXCEPTING LIABILITY ARISING FROM THE SOLE NEGLIGENCE OF DESIGN PROFESSIONAL.

REGISTERED PROFESSIONAL ENGINEER — JOHN V. CANTY — No. 17550 — Exp. 6-30-01 — CIVIL — STATE OF CALIFORNIA

PREPARED UNDER THE DIRECTION OF:
John W. Canty
REGISTERED CIVIL ENGINEER NO. 17550
EXPIRATION DATE: 6-30-01 DATE: 9/12/00

CEG CANTY ENGINEERING GROUP, INC.
CIVIL ENGINEERING - PLANNING - SURVEYING
2020 IOWA AVENUE, SUITE 102, P.O. BOX 52050, RIVERSIDE, CA 92517
TEL (909) 683 - 5234 FAX (909) 683 - 5301
CITY OF RIV. BUSINESS TAX ACCT. NO. 69372 EXP. DATE 04-07-00

SCALE: 1"=40'
DATE: JULY 1999

BENCH MARK:
CITY OF RIV. B.M. E2-M3, PK NAIL & CITY ENGINEER TAG IN N'LY C.L. WING, W'LY CURB OF PIERCE ST. 1300' S'LY OF AMBS DR.
ELEV.=694.231

MARK	REVISIONS	APPR.	DATE
4	ADDED DRIVEWAY TO DOG PARK	RVZ	6-29-01
3	ADD WHEELCHAIR RAMPS	RVZ	5-6-02
2	REV DIV @ STA 14+25.20 FEET	RVZ	9/26/02

DESIGNED BY P.J.C. DRAWN BY C.C. CHECKED BY J.V.C.

CITY OF RIVERSIDE, CALIFORNIA
DEPARTMENT OF PUBLIC WORKS

	BY	DATE
APPROVED BY		
PRINCIPAL ENGR.	JC	11/16/00
PARK DEPARTMENT	PRS	11/03/00
TRAFFIC DIVISION	JS	11/20/00
P.W. ENGR. MGR.	JMR	11/16/00
ST. SERVICES	MR	11/15

APPROVED BY
R. McGrath
DIRECTOR OF PUBLIC WORKS
DATE 11-21-00

IN THE CITY OF RIVERSIDE
LA SIERRA UNIVERSITY
STREET PLANS
PIERCE STREET
STA. 5+07 TO 10+00
FOR: GRIFFIN INDUSTRIES

PROJECT NO. R-3561
SHEET 13 OF 14
FILE NO.: 1104-001

AS BUILT
4/9/03

INDEXED 12-5-2000 LH

PC-4268-S/P

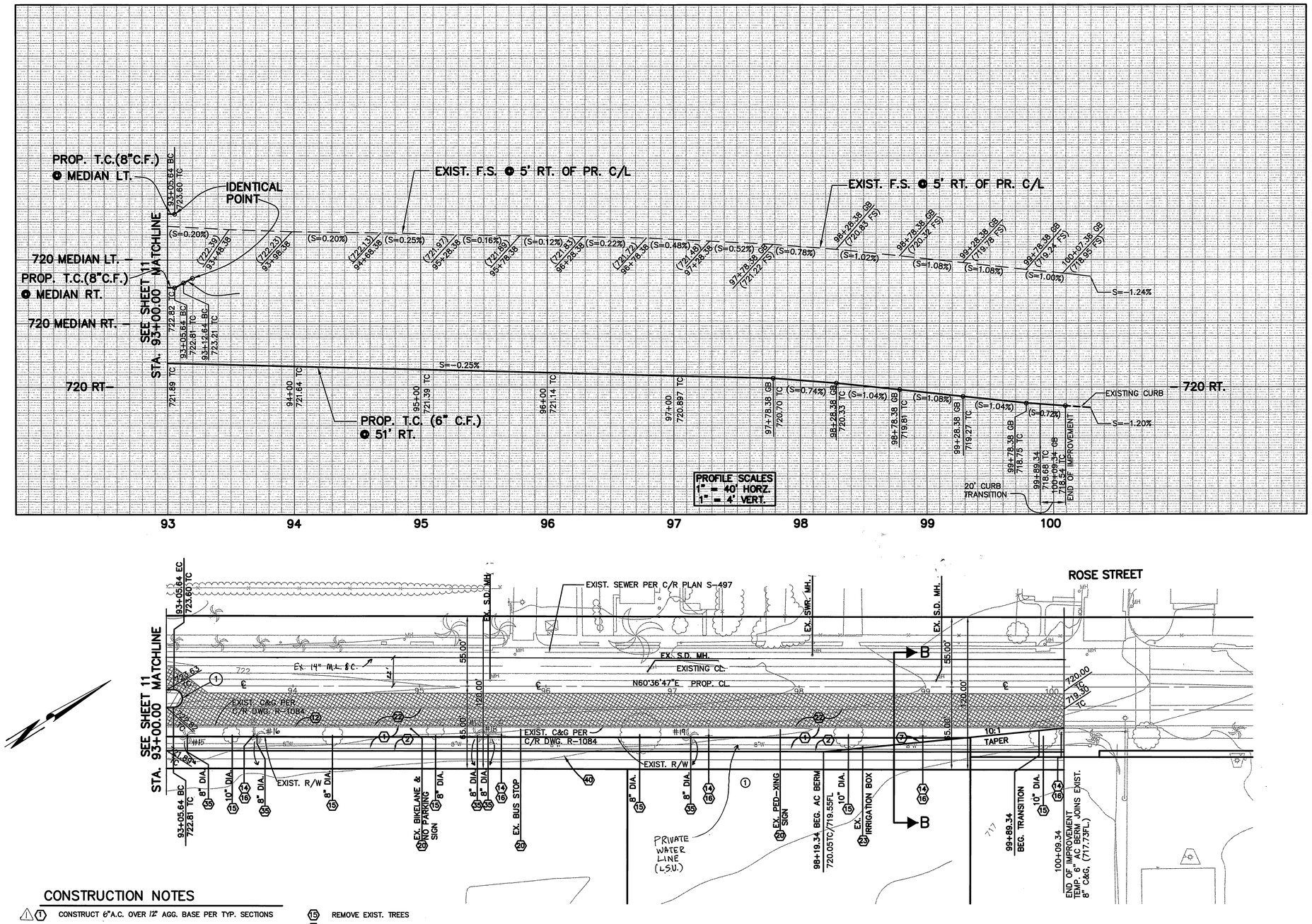

LEGEND

VARIABLE THICKNESS A.C. OVERLAY

REMOVE EX. A.C. PAVEMENT

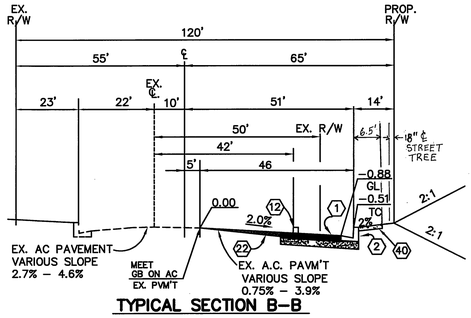

TYPICAL SECTION B-B

STA 97+59~STA. 100+09.34

CONSTRUCTION NOTES

1. CONSTRUCT 6"A.C. OVER 12" AGG. BASE PER TYP. SECTIONS
2. CONSTRUCT 6" CURB (TYPE I) PER CITY STD. 200
3. CONSTRUCT 8" CURB (TYPE II) PER CITY STD. 200
5. CONSTRUCT WHEELCHAIR RAMPS PER CITY STD. 304 (TYPE I).
7. CONSTRUCT 6" A.C. BERM PER CITY STD. DWG. NO. 250 (TYPE I).
9. REMOVE EXIST. A.C. PAVEMENT.
12. REMOVE EXIST. CURB & GUTTER
13. REMOVE EXIST. SIDEWALK
14. RELOCATE EXISTING POLE BY CITY FORCES
15. REMOVE EXIST. TREES
16. RELOCATE EXSITING POWER POLE BY OTHERS.
20. REMOVE/RELOCATE EX. TRAFFIC SIGN.
21. EXISTING TRAFFIC SIGNALS TO BE RELOCATED BY OTHERS
22. VARIABLE THICKNESS AC OVERLAY
23. REMOVE EXISTING (AS NOTED ON PLAN)
24. ~~ADJUST EXISTING MH/UTILITY VAULT TO GRADE (AS NOTED ON PLAN)~~
55. RELOCATE PALM TREE AS SHOWN ON PLANS & PROVIDE AUTOMATIC IRRIGATION SYSTEM
40. CONSTRUCT CURB SIDEWALK PER CITY STD. 325.

DATA TABLE

CURVE/LINE	DELTA/BER'G	RADIUS	LENGTH	TANGENT
1	180°00'00"	7.00	21.99	–

PIERCE STREET

AS BUILT

SCALE IN FEET: 40 20 0 40 80 120

Underground Service Alert
Call: TOLL FREE 1 – 800 227–2600
TWO WORKING DAYS BEFORE YOU DIG

PRIVATE ENGINEERING NOTE

CONSTRUCTION CONTRACTOR AGREES THAT IN ACCORDANCE WITH GENERALLY ACCEPTED CONSTRUCTION PRACTICES, CONSTRUCTION CONTRACTOR WILL BE REQUIRED TO ASSUME SOLE AND COMPLETE RESPONSIBILITY FOR JOB SITE CONDITIONS DURING THE COURSE OF CONSTRUCTION OF THE PROJECT, INCLUDING SAFETY OF ALL PERSONS AND PROPERTY; THAT THIS REQUIREMENT SHALL BE MADE TO APPLY CONTINUOUSLY AND NOT BE LIMITED TO NORMAL WORKING HOURS, AND CONSTRUCTION CONTRACTOR FURTHER AGREES TO DEFEND, INDEMNIFY AND HOLD DESIGN PROFESSIONAL HARMLESS FROM ANY AND ALL LIABILITY, REAL OR ALLEGED, IN CONNECTION WITH THE PERFORMANCE OF WORK ON THIS PROJECT, EXCEPTING LIABILITY ARISING FROM THE SOLE NEGLIGENCE OF DESIGN PROFESSIONAL.

REGISTERED PROFESSIONAL ENGINEER JOHN W. CANTY No. 17550 Exp. 6-30-01 CIVIL STATE OF CALIFORNIA

PREPARED UNDER THE DIRECTION OF:
REGISTERED CIVIL ENGINEER NO. 17550
EXPIRATION DATE: 6-30-01 DATE: 9/12/00
CITY OF RIVERSIDE WATER SYSTEM
APPROVED DATE 11/2/00

CBG CANTY ENGINEERING GROUP, INC.
CIVIL ENGINEERING – PLANNING – SURVEYING
2020 IOWA AVENUE, SUITE 102, P.O. BOX 52050, RIVERSIDE, CA 92517
TEL (909) 683 – 5234 FAX (909) 683 – 5301
CITY OF RIV. BUSINESS TAX ACCT. NO. 69372 EXP. DATE 04–07–00

SCALE: 1"=40' DATE: JULY 1999

BENCH MARK: CITY OF RIV. B.M. E2–M3, PK NAIL & CITY ENGINEER TAG IN N'LY C.B. WING, W'LY CURB OF PIERCE ST. 1300' S'LY OF AMBS DR. ELEV.=694.231

MARK	REVISIONS	APPR.	DATE
1	REVISE PIERCE STREET PAVEMENT	BVZ	2/26/02

DESIGNED BY P.J.C. DRAWN BY C.C. CHECKED BY J.W.C.

CITY OF RIVERSIDE, CALIFORNIA
DEPARTMENT OF PUBLIC WORKS

	BY	DATE
APPROVED BY		
PRINCIPAL ENGR.		
PARK DEPARTMENT		
TRAFFIC DIVISION		
P.W. ENGR. MGR. ST. SERVICES		

APPROVED BY R. McGrath
DIRECTOR OF PUBLIC WORKS
DATE 11-21-00

IN THE CITY OF RIVERSIDE
LA SIERRA UNIVERSITY
STREET PLANS
PIERCE STREET
STA. 93+00.00 TO 100+09.34
FOR: GRIFFIN INDUSTRIES

PROJECT NO. R-3561
SHEET 14 OF 14
FILE NO.: 1104-001

PC-4268-S/P

INDEXED 12-5-2000 GH