STREET IMPROVEMENT PLANS

TRACT 29302 IN THE CITY OF RIVERSIDE

VELVET COURT AND AUDREY AVENUE

GENERAL NOTES:

1. NO PERSON SHALL PERFORM ANY CONSTRUCTION ACTIVITY OR INSTALL ANY OBJECTS WITHIN THE PUBLIC RIGHTS-OF-WAY OR EASEMENTS OF THE CITY OF RIVERSIDE WITHOUT A VALID CONSTRUCTION PERMIT OR, A STREET OPENING PERMIT OR AN ENCROACHMENT PERMIT ISSUED BY THE CITY'S PUBLIC WORKS DEPARTMENT.

2. IT SHALL BE THE RESPONSIBILITY OF THE CONTRACTOR TO CLEAR THE RIGHT OF WAY IN ACCORDANCE WITH THE PROVISIONS OF LAW AS IT AFFECTS EACH UTILITY INCLUDING IRRIGATION LINES AND APPURTENANCES AND AT NO COST TO THE CITY.

3. CONSTRUCTION SHALL BE IN ACCORDANCE WITH THE CITY OF RIVERSIDE DEPARTMENT OF PUBLIC WORKS, STANDARD DRAWINGS, IT'S SUPPLEMENTAL NOTES AND THE STANDARD SPECIFICATIONS FOR PUBLIC WORKS CONSTRUCTION CURRENT EDITION.

4. THE PRIVATE ENGINEER SIGNING THESE PLANS IS RESPONSIBLE FOR ASSURING THE ACCURACY AND ACCEPTABILITY OF THE WORK HEREON. IN THE EVENT OF DISCREPANCIES ARISING DURING CONSTRUCTION, THE PRIVATE ENGINEER SHALL BE RESPONSIBLE FOR DETERMINING AN ACCEPTABLE SOLUTION AND REVISING THE PLANS FOR APPROVAL BY THE CITY.

5. QUANTITIES SHOWN ARE FOR INFORMATION ONLY AND THE CITY OF RIVERSIDE IS NOT RESPONSIBLE FOR THEIR ACCURACY.

8. THE DEVELOPER SHALL BE RESPONSIBLE FOR PRESERVING OR RE-ESTABLISHING AND REFERENCING SURVEY MONUMENTS DESTROYED, DISTURBED OR BURIED AS A RESULT OF CONSTRUCTION SHOWN HEREON.

7. SEE CITY OF RIVERSIDE PUBLIC UTILITIES DWG OUL5-604736 FOR LOCATION OF REQUIRED STREET LIGHTS.

8. ALL FLAGGED ELEVATIONS SHALL BE STAKED IN THE FIELD BY THE PRIVATE ENGINEER.

9. WHERE NEW PAVEMENT IS TO JOIN THE EXISTING PAVEMENT, THE EDGE OF THE EXISTING PAVEMENT SHALL BE TRIMMED IN A SMOOTH AND STRAIGHT LINE. CONSTRUCT MATCH-UP PAVING AS SHOWN ON THE PLANS AND OVERLAY PAVING AS DIRECTED IN THE FIELD TO PRODUCE A SMOOTH SECTION.

10. CONSTRUCT DRIVEWAY APPROACHES PER STANDARD DRAWING 302. EXACT SIZE AND LOCATION TO BE STAKED BY THE PRIVATE ENGINEER PRIOR TO CONSTRUCTION OF THE CURB AND GUTTER.

11. THE SUBDIVIDER SHALL ARRANGE FOR A SOIL TEST TO BE MADE BY A SOILS ENGINEER AFTER THE STREETS HAVE BEEN PREPARED TO ROUGH GRADE AND PRIOR TO CURB AND GUTTER CONSTRUCTION DEPTH OF BASE MATERIAL AND A.C. PAVING SHALL BE DETERMINED BY THE CITY OF RIVERSIDE DESIGN STANDARDS AND TEST PROCEDURES.

12. ON ALL AREAS WITHIN PUBLIC RIGHT OF WAY WHERE THE FILL IS ONE (1) FOOT OR GREATER, A LETTER WILL BE REQUIRED FROM THE SOILS ENGINEER, CERTIFYING THE COMPACTION OF THE FILL BELOW SUBGRADE, PRIOR TO ISSUANCE OF THE CONSTRUCTION PERMIT/CUT SHEETS.

13. ALL TRAFFIC SIGNS SHALL BE INSTALLED PRIOR TO OPENING THE STREETS TO TRAFFIC.

14. ANY TRAFFIC CONTROL STRIPING OBLITERATED AND/OR BADLY WORN DURING CONSTRUCTION SHALL BE RESTORED BY THE CONTRACTOR WITHIN FIVE DAYS AFTER NOTIFICATION FROM THE CITY INSPECTORS.

15. FINAL STRIPING FOR TRAFFIC CONTROL AND/OR PAVEMENT MARKING TO BE THE RESPONSIBILITY OF THE DEVELOPER.

16. THE CONTRACTOR SHALL CALL IN A LOCATION REQUEST TO UNDERGROUND SERVICE ALERT (USA), PHONE #1-800-227-2600, TWO WORKING DAYS BEFORE DIGGING. NO CONSTRUCTION PERMIT WILL BE ISSUED BY THE PUBLIC WORKS DEPARTMENT INVOLVING EXCAVATION FOR UNDERGROUND FACILITIES UNLESS THE APPLICANT HAS BEEN PROVIDED AN INQUIRY IDENTIFICATION NUMBER BY U.S.A.

17. IN PAVEMENT OVERLAY AREAS, ANY DISTRESSED EXISTING PAVEMENT SHALL BE REMOVED AND REPLACED AS DIRECTED BY THE INSPECTOR PRIOR TO OVERLAYING WITH A.C. PAVING.

18. THE CONTRACTOR SHALL COORDINATE TRENCHING FOR CABLE TELEVISION WITH OTHER TRENCHING WITHIN THE SUBDIVISION.

CONSTRUCTION NOTES

(1) CONSTRUCT 2.5" AC PAVEMENT OVER 10.5" CRUSHED AGGREGATE BASE. PER R-2957.

(2) CONSTRUCT 6" CURB AND GUTTER, TYPE I PER CITY OF RIVERSIDE STANDARD DRAWING NO. 200

(3) CONSTRUCT WHEELCHAIR RAMP PER CITY OF RIVERSIDE STANDARD DRAWING NO. 304 TYPE 1

(4) CONSTRUCT DRIVEWAY APPROACH PER CITY OF RIVERSIDE STANDARD DRAWING NO. 302, CURB-1

(5) INSTALL R1 AND STREET SIGNS PER CITY OF RIVERSIDE STANDARD DRAWING NOS. 662 & 666

(6) REMOVE EXISTING AC PAVEMENT AND BERM, AND CONSTRUCT 2.5" AC PAVEMENT OVER 10.5" CRUSHED AGGREGATE BASE PER R-2957

(7) POWER POLE/STREET LIGHT RELOCATED 55'± NORTHEAST

(8) CONSTRUCT 6' CURB SIDEWALK PER CITY OF RIVERSIDE STANDARD DRAWING NO. 325

(9) VARIABLE THICKNESS OVERLAY

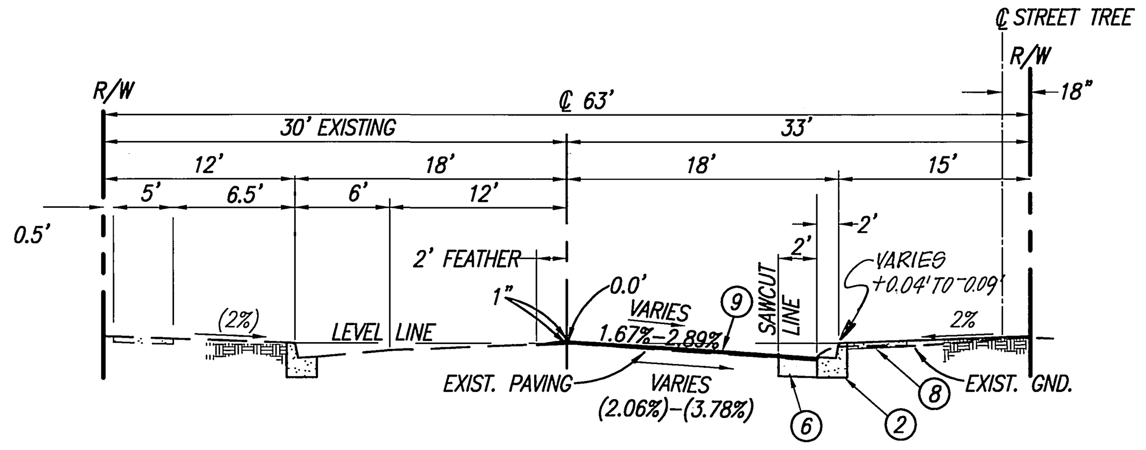

AUDREY AVENUE

CONSTRUCT 2.5" A.C. OVER 10.5" C.A.B. PER R-2957
T.I. = 5.0

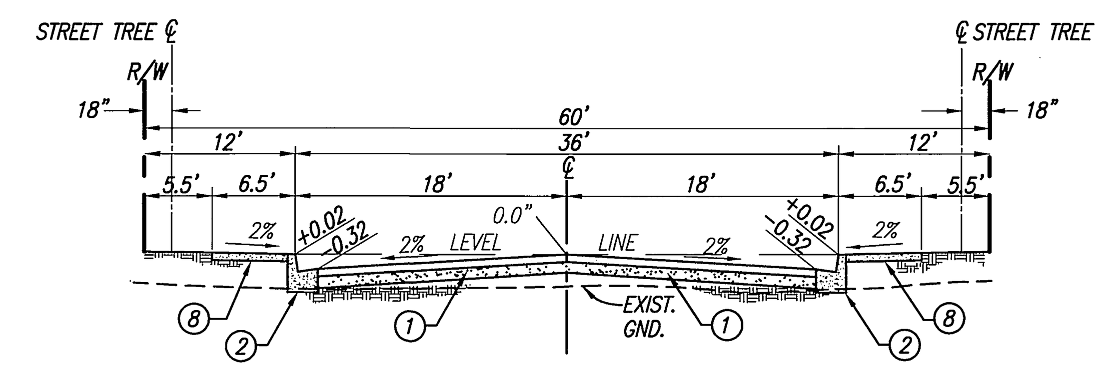

VELVET COURT

CONSTRUCT 2.5" A.C. OVER 10.5" C.A.B. PER R-2957
STATION 1+05.39
T.I. = 5.0'

TRAFFIC AND STREET NAME SIGN SCHEDULE		
(A)	AUDREY AVENUE	9200 BLOCK
	VELVET COURT	4600 BLOCK
(B)	R-1 (30")	

HOLD HARMLESS INDEMNIFICATION CLAUSE

THE CONTRACTOR AGREES THAT HE SHALL ASSUME SOLE AND COMPLETE RESPONSIBILITY FOR JOB SITE CONDITIONS DURING THE COURSE OF CONSTRUCTION OF THE PROJECT INCLUDING SAFETY OF ALL PERSONS AND PROPERTY; THAT THIS REQUIREMENT SHALL APPLY CONTINUOUSLY AND NOT BE LIMITED TO NORMAL WORKING HOURS; AND THAT THE CONTRACTOR SHALL DEFEND, INDEMNIFY, AND HOLD THE CITY OF RIVERSIDE, THE OWNER, AND THE PRIVATE ENGINEERS HARMLESS FOR ANY AND ALL LIABILITY; REAL OR ALLEGED, IN CONNECTION WITH PERFORMANCE OF WORK ON THIS PROJECT, EXCEPTING FOR LIABILITY ARISING FROM THE SOLE NEGLIGENCE OF THE OWNER OR THE ENGINEER.

EXISTING UNDERGROUND STRUCTURES

THE EXISTENCE AND LOCATION OF ANY UNDERGROUND UTILITY PIPE STRUCTURES OR CONDUITS SHOWN ON THESE PLANS ARE OBTAINED BY A SEARCH OF THE AVAILABLE RECORDS. TO THE BEST OF OUR KNOWLEDGE, THERE ARE NO EXISTING UTILITIES EXCEPT AS SHOWN ON THESE PLANS. IT SHALL BE THE CONTRACTOR'S RESPONSIBILITY TO NOTIFY THE OWNERS OF THE UTILITIES OR STRUCTURES CONCERNED BEFORE STARTING WORK. CONTRACTOR FURTHER ASSUMES ALL LIABILITY AND RESPONSIBILITY FOR THE UNDERGROUND UTILITY PIPES, CONDUITS OR STRUCTURES SHOWN OR NOT SHOWN ON THESE PLANS.

NOTICE TO CONTRACTOR

CONTRACTOR SHALL VERIFY ALL CONDITIONS AND DIMENSIONS AND SHALL REPORT ALL DISCREPANCIES TO THE ENGINEER PRIOR TO THE COMMENCEMENT OF WORK.

GENERAL NOTES FOR STREET TREE PLANTING

1. ALL RELATED WORK SHALL CONFORM TO THE CITY OF RIVERSIDE PARK AND RECREATION DEPARTMENT STANDARDS AND CITY OF RIVERSIDE STREET TREE POLICIES. STREET TREE PLANTING SHALL CONFORM TO STANDARD DETAILS 1001 AND 1002, AND STANDARD SPECIFICATION 02480.

2. WHEN CALLING FOR INSPECTIONS CONTACT THE STREET TREE INSPECTOR A MINIMUM OF 48 HOURS IN ADVANCE AT (909) 351-6126 TO SCHEDULE AN INSPECTION. A FIELD NOTICE WILL BE ISSUED AS WRITTEN APPROVAL FOR EACH STAGE OF INSPECTION. A VERBAL APPROVAL WILL NOT BE ACCEPTABLE. INSPECTIONS ARE REQUIRED:
   a. AFTER COMPLETION OF FINAL GRADING OF THE LOTS AND WHEN ALL UTILITY SERVICES AND SEWER LATERALS HAVE BEEN MARKED, BUT PRIOR TO DIGGING PLANT PITS. ALL FINAL STREET TREE LOCATIONS ARE TO BE SPOTTED IN THE FIELD BY THE STREET TREE INSPECTOR;
   b. WHILE DIGGING PLANT PITS AND PLANTING/RELOCATING TREES;
   c. AFTER PLANTING AND ALL OTHER INDICATED OR SPECIFIED WORK HAS BEEN COMPLETED, FOR START OF MAINTAINANCE;
   d. AT THE END OF THE MAINTAINANCE PERIOD, THE CONTRACTOR/DEVELOPER SHALL CALL THE STREET TREE INSPECTOR AT (909) 351-6126 FOR A FINAL ACCEPTANCE INSPECTION IN ORDER TO BE RELEASED FROM MAINTAINANCE. DEVELOPERS BONDS WILL NOT BE RELEASED UNTIL AFTER RECEIPT OF WRITTEN NOTIFICATION FROM THE CITY THAT THE TREES PASS FINAL INSPECTION AND THE PARK AND RECREATION DEPARTMENT IS ASSUMING MAINTAINANCE RESPONSIBILITIES.

3. ALL STREET TREES ARE TO BE PLANTED PRIOR TO OCCUPANCY.

4. THE DEVELOPER SHALL BE RESPONSIBLE TO ACCEPTABLY MAINTAIN ALL PLANTINGS FOR A MINIMUM PERIOD OF ONE (1) YEAR.

5. STREET TREE PLANTING SHALL BE AS FOLLOWS:

STREET NAME	BOTANICAL NAME/COMMON NAME	MIN. SIZE	APPROX. SPACING	*NO. REQ'RD.
a. AUDREY AVENUE	PYRUS C. 'ARISTOCRAT'/ARISTOCRAT PEAR	15 GAL.	45' O.C.	4 EA.
b. VELVET COURT	TRISTANIA CONFERTA/BRISBANE BOX	15 GAL.	45' O.C.	7 EA.

*NOTE: IN THE INTEREST OF PUBLIC SAFETY AND MAINTAINANCE THE STREET TREE INSPECTOR SHALL HAVE THE AUTHORITY TO REVISE THE STREET TREE QUANTITIES AND LOCATIONS SHOWN ON APPROVED PLANS BASED UPON FIELD CONDITIONS FOUND AT THE TIME OF INSTALLATION OF THE TREES.

WATER DEPARTMENT NOTE:

DEVELOPER TO GIVE CITY WATER DIVISION FIVE (5) WORKING DAYS WRITTEN NOTICE PRIOR TO START OF CONSTRUCTION AND TO ALLOW CITY TEN (10) WORKING DAYS FOR COMPLETION OF WORK.

909.351.6368

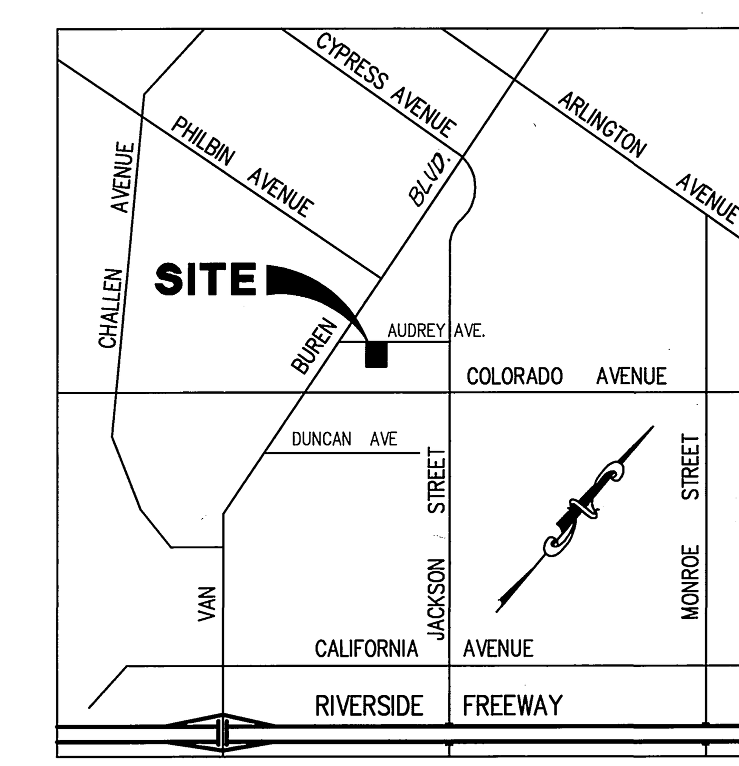

VICINITY MAP
NTS

CITY OF RIVERSIDE– PUBLIC UTILITIES DEPARTMENT-ELECTRIC OVERHEAD & UNDERGROUND
APPROVED BY: [signature] DATE 9-22-00

CITY OF RIVERSIDE WATER SYSTEM
APPROVED BY: Richard L. [signature] DATE 10/12/00

SOUTHERN CALIFORNIA GAS
REVIEWED BY R.A. Ventueglia DATE 10-13-00

BUSINESS TAX CERTIFICATE NUMBER 71279 EXPIRATION DATE 12/01/00

CALL BEFORE YOU DIG — Underground Service Alert — Call: TOLL FREE 1-800 227-2600 — TWO WORKING DAYS BEFORE YOU DIG

PRIVATE ENGINEERING NOTE

CONSTRUCTION CONTRACTOR AGREES THAT IN ACCORDANCE WITH GENERALLY ACCEPTED CONSTRUCTION PRACTICES, CONSTRUCTION CONTRACTOR WILL BE REQUIRED TO ASSUME SOLE AND COMPLETE RESPONSIBILITY FOR JOB SITE CONDITIONS DURING THE COURSE OF CONSTRUCTION OF THE PROJECT, INCLUDING SAFETY OF ALL PERSONS AND PROPERTY; THAT THIS REQUIREMENT SHALL BE MADE TO APPLY CONTINUOUSLY AND NOT BE LIMITED TO NORMAL WORKING HOURS, AND CONSTRUCTION CONTRACTOR FURTHER AGREES TO DEFEND, INDEMNIFY AND HOLD DESIGN PROFESSIONAL HARMLESS FROM ANY AND ALL LIABILITY, REAL OR ALLEGED, IN CONNECTION WITH THE PERFORMANCE OF WORK ON THIS PROJECT, EXCEPTING LIABILITY ARISING FROM THE SOLE NEGLIGENCE OF DESIGN PROFESSIONAL.

BENCHMARK
G3-K3
P.K. NAIL IN THE EAST CURB RETURN OF VAN BUREN BOULEVARD, 0.5' SOUTH OF SOUTHEAST CURB RETURN AT PHILBIN AVENUE.
ELEVATION: 793.275

REGISTERED PROFESSIONAL ENGINEER — CHARLES W. STEVENS — NO. C29725 — Exp. 3/31/03 — CIVIL — STATE OF CALIFORNIA

THE CORNERSTONE GROUP — PSALMS 118:22-24
CIVIL ENGINEERING, PLANNING, LAND SURVEYING
1485 SPRUCE STREET, SUITE H
RIVERSIDE, CALIFORNIA 92507
(909) 342-0036 FAX (909) 342-0268
[signature] 9-21-00
CHARLES W. STEVENS
R.C.E. 29725 EXP. 3/31/03

MARK	REVISIONS:	APPR.	DATE

DESIGNED BY CWV DRAWN BY CWV CHECKED BY CWS

CITY OF RIVERSIDE
PUBLIC WORKS DEPARTMENT

APPROVED BY	BY	DATE
PRINCIPAL ENGINEER	[initials]	11/2/2000
PARK DEPARTMENT	[initials]	10/17/00
TRAFFIC DIVISION	[initials]	11/2/00
P.W. ENGR. MANAGER	TMS	11/3/00
STREET SERVICES	[initials]	10/17/00

PARK DEPARTMENT
R. McGrath
PUBLIC WORKS DIRECTOR
DATE 11-6-00

STREET IMPROVEMENT PLANS
TRACT 29302
Velvet Court and Audrey Avenue Plan and Profile
HORIZ. SCALE: AS SHOWN VERT. SCALE: AS SHOWN

ACCOUNT NO. 3668
R-3577
SHEET 1 OF 2

PC-4282-S

NAME: X:\R14\3668\3668IMP1.DWG DATE: JUN 19, 2000 TIME: 2:5 PM

INDEXED 1-8-01 4H

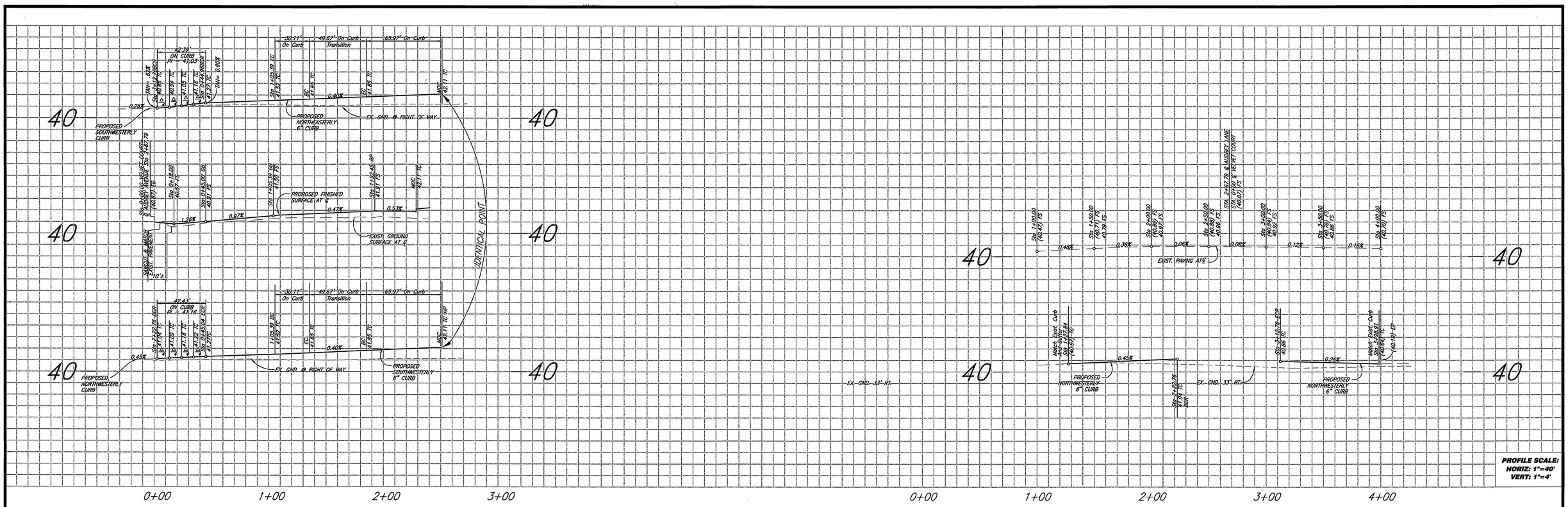

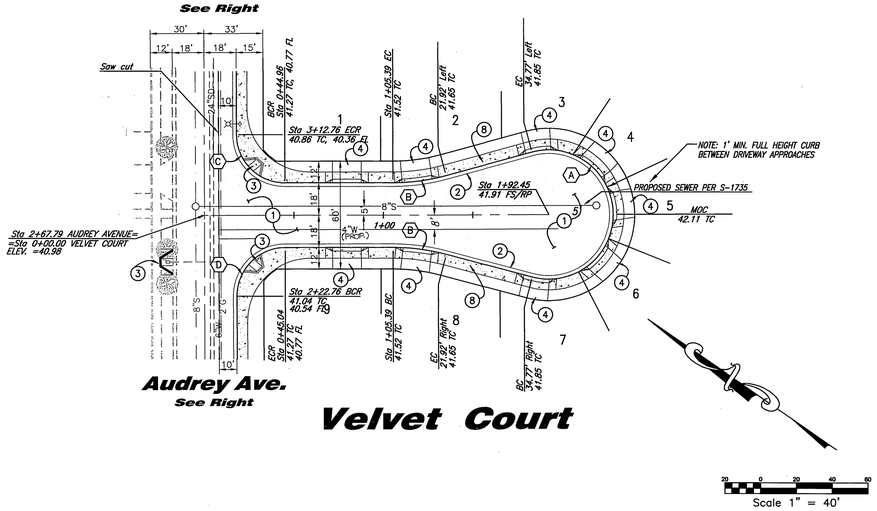

CURVE TABLE

	Delta	Radius	Length	Tangent
(A)	210°00'00"	36.00'	131.95'	134.35'
(B)	15°00'00"	115.00'	30.11'	15.14'
(C)	89°57'14"	27.00'	42.39'	26.98'
(D)	90°02'47"	27.00'	42.43'	27.02'

DRIVEWAY APPROACH

Lot	℄ Station	Offset to CF	Width
1	0+79.68	18.00' Left	16'
2	1+18.98	18.81' Left	16'
3	1+86.45	35.57' Left	16'
4	2+18.08	26.06' Left	16'
5	2+28.45	4.68' Left	16'
6	2+20.93	23.16' Right	16'
7	1+86.45	35.43' Right	16'
8	1+19.47	18.81' Right	16'
9	0+79.68	18.00' Right	16'

Sta 0+00.00 AUDREY AVENUE =℄ INT. VAN BUREN BLVD.

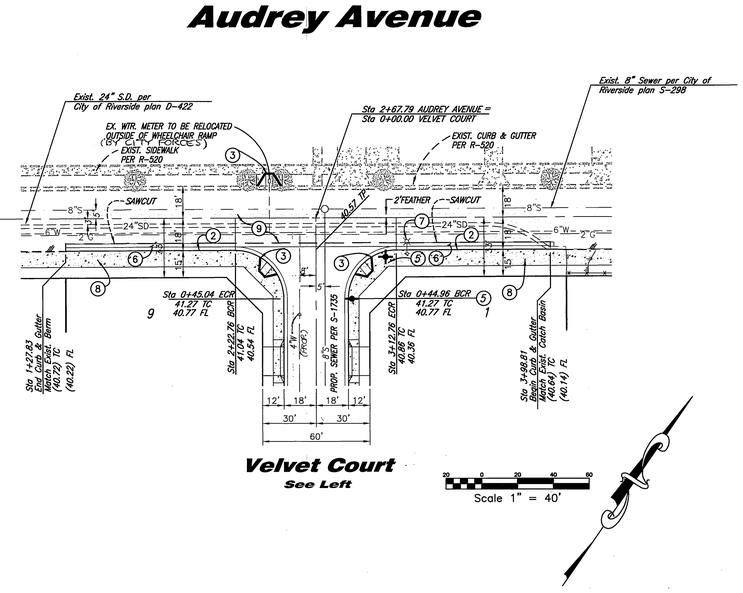

CONSTRUCTION NOTES

1. CONSTRUCT 2.5 " AC PAVEMENT OVER 10.5 " CRUSHED AGGREGATE BASE. PER R-2957.
2. CONSTRUCT 6" CURB AND GUTTER, TYPE I PER CITY OF RIVERSIDE STANDARD DRAWING NO. 200
3. CONSTRUCT WHEELCHAIR RAMP PER CITY OF RIVERSIDE STANDARD DRAWING NO. 304, TYPE 1
4. CONSTRUCT DRIVEWAY APPROACH PER CITY OF RIVERSIDE STANDARD DRAWING NO. 302, CURB I.
5. INSTALL R1 AND STREET SIGNS PER CITY OF RIVERSIDE STANDARD DWG. NOS. 682 & 686
6. REMOVE EXISTING AC PAV'MT. AND BERM. AND CONSTRUCT 2.5 " AC PAV'MT. OVER 10.5 " CRUSHED AGGREGATE BASE PER R-2957.
7. POWER POLE/STREET LIGHT RELOCATED 55'± NORTHEAST
8. CONSTRUCT 6' CONCRETE CURB SIDEWALK PER CITY OF RIVERSIDE STANDARD DRAWING NO. 325
9. VARIABLE THICKNESS OVERLAY.

CITY OF RIVERSIDE— PUBLIC UTILITIES DEPARTMENT - ELECTRIC OVERHEAD & UNDERGROUND
APPROVED BY: John L. Seng 9-22-00 DATE

CITY OF RIVERSIDE WATER SYSTEM
APPROVED BY: Richard A. Derbin 10/12/00 DATE

SOUTHERN CALIFORNIA GAS
REVIEWED BY R.G. Ventriglia 10-13-00 DATE

BUSINESS TAX CERTIFICATE NUMBER 71279 EXPIRATION DATE 12/01/00

CALL BEFORE YOU DIG — Underground Service Alert — Call: TOLL FREE 1-800 227-2600 — TWO WORKING DAYS BEFORE YOU DIG

PRIVATE ENGINEERING NOTE

CONSTRUCTION CONTRACTOR AGREES THAT IN ACCORDANCE WITH GENERALLY ACCEPTED CONSTRUCTION PRACTICES, CONSTRUCTION CONTRACTOR WILL BE REQUIRED TO ASSUME SOLE AND COMPLETE RESPONSIBILITY FOR JOB SITE CONDITIONS DURING THE COURSE OF CONSTRUCTION OF THE PROJECT, INCLUDING SAFETY OF ALL PERSONS AND PROPERTY; THAT THIS REQUIREMENT SHALL BE MADE TO APPLY CONTINUOUSLY AND NOT BE LIMITED TO NORMAL WORKING HOURS, AND CONSTRUCTION CONTRACTOR FURTHER AGREES TO DEFEND, INDEMNIFY AND HOLD DESIGN PROFESSIONAL HARMLESS FROM ANY AND ALL LIABILITY, REAL OR ALLEGED, IN CONNECTION WITH THE PERFORMANCE OF WORK ON THIS PROJECT, EXCEPTING LIABILITY ARISING FROM THE SOLE NEGLIGENCE OF DESIGN PROFESSIONAL.

BENCHMARK
G3-K3
P.K. NAIL IN THE EAST CURB RETURN OF VAN BUREN BOULEVARD, 0.5' SOUTH OF SOUTHEAST CURB RETURN AT PHILBIN AVENUE.
ELEVATION: 793.275

REGISTERED PROFESSIONAL ENGINEER — CHARLES W. STEVENS — NO. C29725 Exp. 3/31/03 — CIVIL — STATE OF CALIFORNIA

THE CORNERSTONE GROUP — CIVIL ENGINEERING, PLANNING, LAND SURVEYING
1485 SPRUCE STREET, SUITE H
RIVERSIDE, CALIFORNIA 92507
(909) 342-0036 FAX (909) 342-0268
Charles W. Stevens 9-21-00
CHARLES W. STEVENS
R.C.E. 29725 EXP. 3/31/03

MARK	REVISIONS:	APPR.	DATE

DESIGNED BY CWV DRAWN BY CWV CHECKED BY CWS

CITY OF RIVERSIDE
PUBLIC WORKS DEPARTMENT

	BY	DATE
APPROVED BY		
PRINCIPAL ENGINEER		11/3/00
PARK DEPARTMENT		10/7/00
TRAFFIC DIVISION		11/2/00
P.W. ENGR. MANAGER		11/3/00
STREET SERVICES		10/17/00

R. M. Grath
PUBLIC WORKS DIRECTOR
DATE 11-6-00

STREET IMPROVEMENT PLANS
TRACT 29302
Velvet Court and Audrey Avenue
Plan and Profile

HORIZ. SCALE: AS SHOWN VERT. SCALE: AS SHOWN

ACCOUNT NO. 3668
R-3577
SHEET 2 OF 2

NAME: X:\R14\3668\3668IMP2.DWG DATE: JUN 19, 2000 TIME: 3:44 PM

INDEXED 1-8-01 JH

PC-4282-S