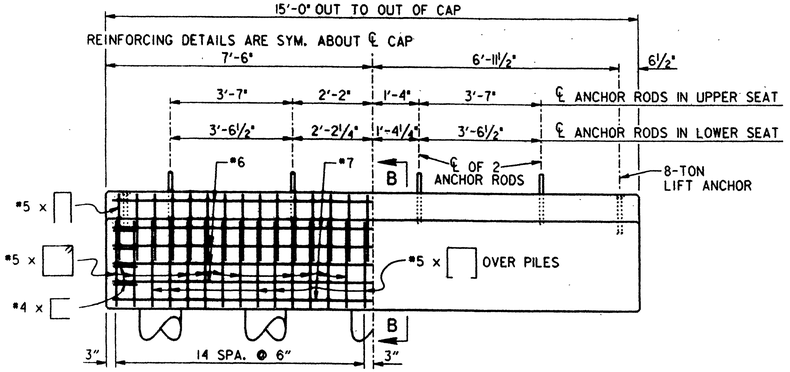

PRECAST CAP

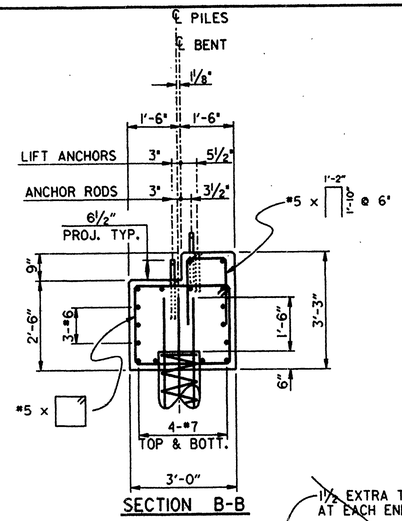

SECTION B-B

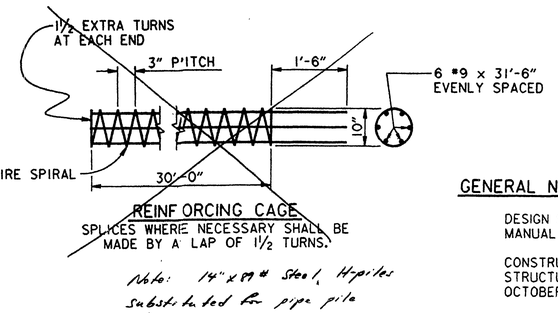

REINFORCING CAGE

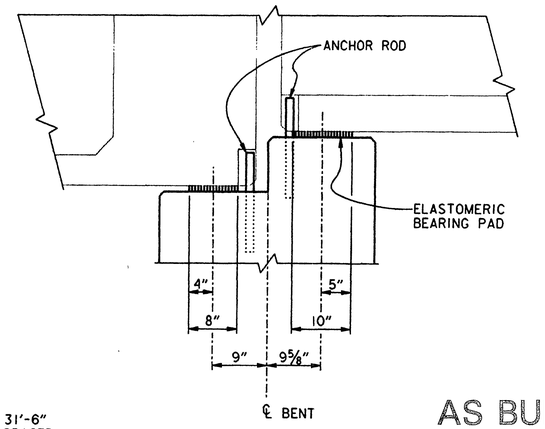

AS BUILT DRAWINGS

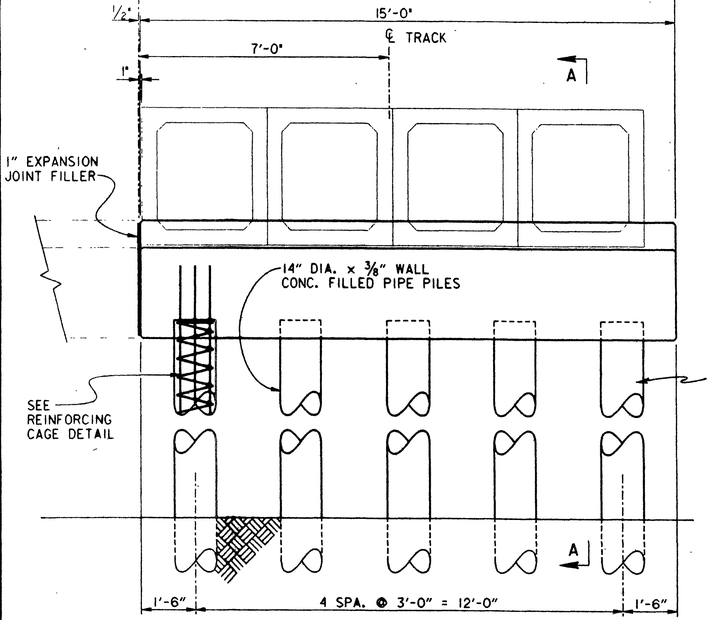

ELEVATION
(CONCRETE COLLAR NOT SHOWN)

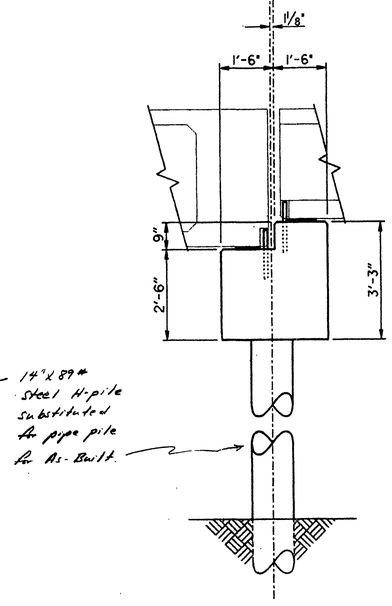

SECTION B-B

GENERAL NOTES

DESIGN SPECIFICATIONS: AMERICAN RAILWAY ENGINEERING ASSOCIATION 1994 MANUAL FOR RAILWAY ENGINEERING.

CONSTRUCTION SPECIFICATIONS: STANDARD SPECIFICATIONS FOR EARTHWORK AND STRUCTURES, THE ATCHISON, TOPEKA AND SANTE FE RAILWAY COMPANY, DATED OCTOBER, 1986 AND SPECIAL PROVISIONS.

DESIGN LIVE LOADING: COOPER E-80 IMPACT: 100L/(L+D), 60% MAX.

REINFORCED CONCRETE:
PILE CAP: f'c = 3500 P.S.I., fc = 1400 P.S.I., n = 9
~~PILES: f'c = 3000 P.S.I.~~, fc = 1200 P.S.I., n = 9

REINFORCEMENT: ALL REINFORCING BARS TO BE ASTM A-615 GRADE 60 DEFORMED TYPE. fs = 24,000 P.S.I. DIMENSIONS ARE TO CENTER OF BARS UNLESS OTHERWISE SHOWN. BARS TO BE BENT ACCORDING TO THE MANUAL OF STANDARD PRACTICE, A.C.I.

BEARINGS: ALL BEARINGS TO BE STEEL LAMINATED ELASTOMERIC BEARING PADS (MIN. DUROMETER, TYPE A, 60±5)

PRIOR TO THE START OF CONSTRUCTION AND ORDERING MATERIALS, CONTRACTOR SHALL FIELD VERIFY ALL DIMENSIONS RELATED TO THE EXISTING STRUCTURES.

THE MINIMUM CLEARANCE, MEASURED FROM THE FACE OF THE CONCRETE TO THE SURFACE OF ANY REINFORCING BAR, SHALL BE 2", EXCEPT WHERE OTHERWISE NOTED.

ALL EXPOSED CONCRETE SURFACES DOWN TO 1'-0" BELOW FINISHED GRADE SHALL RECEIVE A RUBBED FINISH AS OUTLINED IN SECTION 6.10.2 OF THE STANDARD SPECIFICATIONS.

THE LOCATION OF ALL CONSTRUCTION JOINTS NOT SHOWN ON THE PLANS SHALL BE APPROVED BY THE ENGINEER.

THE CONTRACTOR SHALL BE RESPONSIBLE FOR THE STABILITY OF THE STRUCTURE DURING ERECTION.

ALL EXTERIOR CONCRETE CORNERS SHALL BE CONSTRUCTED WITH ¾" CHAMFERS, UNLESS OTHERWISE NOTED.

ALL STRUCTURAL STEEL SHALL CONFORM TO THE REQUIREMENTS OF ASTM A-36, UNLESS OTHERWISE NOTED

METAL SHELL PILING SHALL CONFORM TO THE REQUIREMENTS OF ASTM A-252, GRADE 2.

ANCHOR BOLTS SHALL BE ASTM A-449 STEEL.

ALL WELDS SHALL BE MADE USING E60 ELECTRODES.

Note: 14"x89# Steel H-piles substituted for pipe pile for AS-BUILT

NO.	DATE	REVISIONS	BY	CK'D.	APP'D
1	10-12-94	PER AT&SF COMMENTS			

REGISTERED PROFESSIONAL ENGINEER — KENNETH F. HECK — NO. C050140 — 6-30-97 — STATE OF CALIFORNIA

MORRISON KNUDSEN CORPORATION
TRANSPORTATION AND WATER RESOURCES GROUP
180 HOWARD STREET, SAN FRANCISCO, CALIFORNIA 94105

DESIGNED WKF | DRAWN BDC | CHECKED RDR | RECOMMENDED
DATE 10-03-94 | APPROVED:

THE ATCHISON, TOPEKA AND SANTA FE RAILWAY COMPANY

APPROVED:

SOUTHERN CALIFORNIA COMMUTER PROJECT
WEST RIVERSIDE - ARLINGTON
MONROE STREET BRIDGE
BENT DETAILS - 1

DWG. NO. R-3594
SHEET 1 OF 2 REV
CONTRACT PACKAGE

cad file no.: W:#CE1DAT#BRIDGE#CADD#1298#48BRG148PRD01-.dgn

INDEXED 8-8-2000 LH

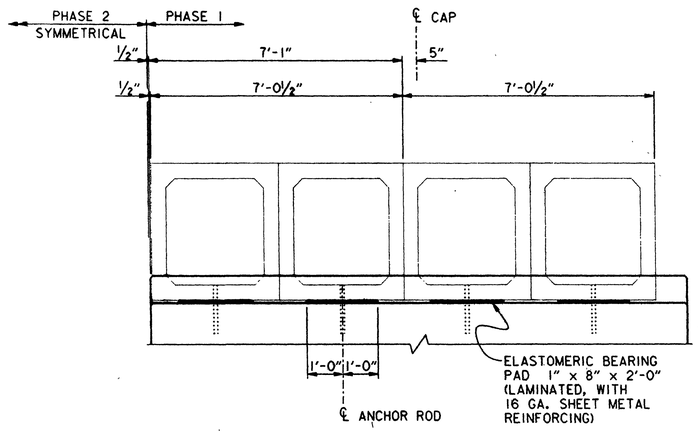

LOWER SEAT

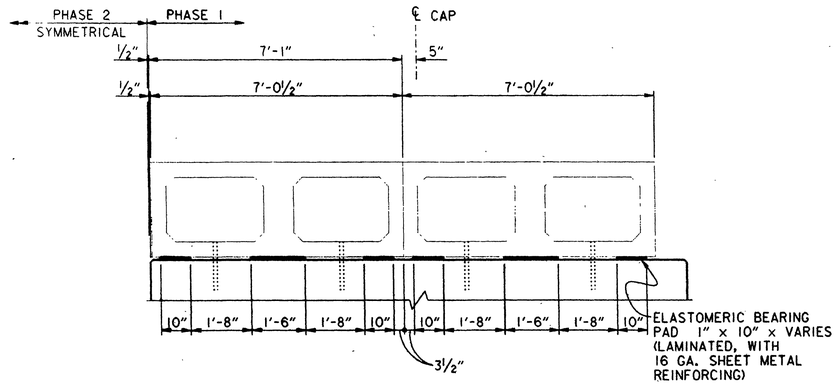

UPPER SEAT

BEARING PAD LAYOUT

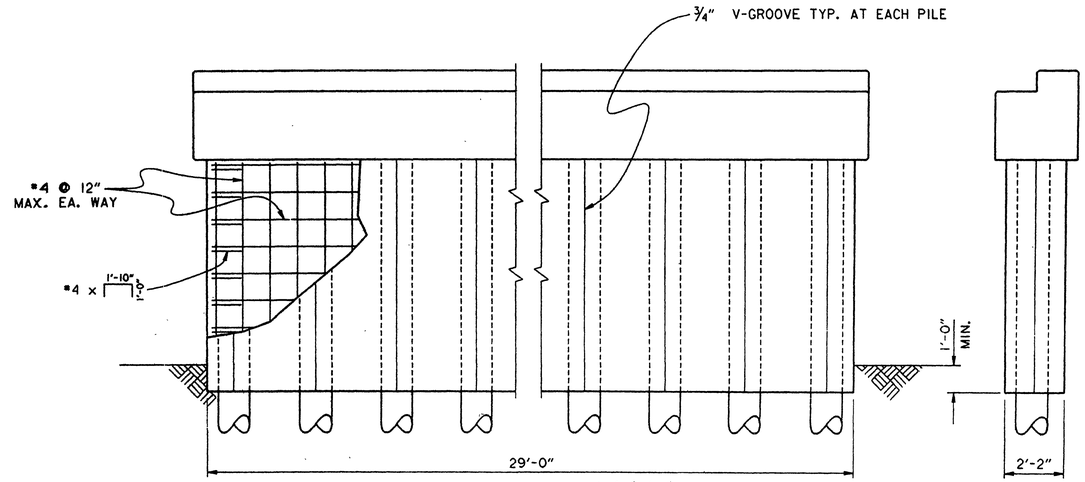

Note: 14" x 89# H-pile substituted for pipe pile for AS-BUILT

ELEVATION

SECTION C-C

NOTE: CONSTRUCT COLLAR AFTER COMPLETETION OF PHASE 2 BENT PORTION.

CONCRETE COLLAR DETAILS

AS BUILT DRAWINGS

NO.	DATE	REVISIONS	BY	CKD.	APP'D
1	10-12-94	PER AT&SF COMMENTS			

MORRISON KNUDSEN CORPORATION
TRANSPORTATION AND WATER RESOURCES GROUP
180 HOWARD STREET, SAN FRANCISCO, CALIFORNIA 94105

DESIGNED WKF | DRAWN BDC | CHECKED RDR | RECOMMENDED
DATE 10-03-94 | APPROVED:

THE ATCHISON, TOPEKA AND SANTA FE RAILWAY COMPANY

APPROVED:

SOUTHERN CALIFORNIA COMMUTER PROJECT
WEST RIVERSIDE - ARLINGTON

MONROE STREET BRIDGE
BENT DETAILS - 2

DWG. NO. R-3594
SHEET 2 OF 2 REV
CONTRACT PACKAGE

cad file no.: W:\CEIDAT\BRIDGE\CADD\ 1298 \ 48BRG\48PRD02-.dgn

INDEXED 8-8-2000 LH