RIVERSIDE CITY OF RIVERSIDE CALIFORNIA

INCORPORATED 1883

PUBLIC WORKS DEPARTMENT

SIDEWALK CONSTRUCTION (2002/2003)

GENERAL CONSTRUCTION NOTES

1. EXISTING UTILITIES, SHOWN ON THIS PLAN, ARE PLOTTED FROM UTILITY RECORDS. THE CONTRACTOR IS REQUIRED TO TAKE DUE PRECAUTIONARY MEASURES TO LOCATE AND PROTECT ALL UTILITIES WHETHER OR NOT SHOWN ON THIS PLAN.
2. PRIME CONTRACTOR BIDDING THIS WORK SHALL HAVE A CLASS "A" OR "C-12" LICENSE.
3. TREES AND SHRUBS, AFFECTED BY THE PROPOSED SIDEWALK CONSTRUCTION, SHALL BE TRIMMED TO AT LEAST 8' VERTICALLY ABOVE THE SIDEWALK SURFACE AND TO AT LEAST 3' LATERALLY OF THE SIDEWALK, WHERE RIGHT-OF-WAY PERMITS.
4. MAIL BOXES, INTERFERING WITH PROPOSED SIDEWALK CONSTRUCTION, SHALL BE TEMPORARILY RELOCATED TO ENABLE PROPERTY OWNERS TO RECEIVE THEIR MAIL AND BE REINSTALLED OR RECONSTRUCTED IN KIND, IN FINAL POSITION BY THE CONTRACTOR.
5. WATER METERS, GAS METERS AND ALL STREET PULL BOXES AFFECTED BY CONSTRUCTION, SHALL BE ADJUSTED TO THE PROPOSED SIDEWALK GRADE.
6. EXISTING SPRINKLERS AND IRRIGATION LINES, AFFECTED BY THE CONSTRUCTION OF THE PROPOSED SIDEWALK, SHALL BE RELOCATED TO THE BACK OF THE SIDEWALK OR MODIFIED TO COVER EXISTING IRRIGATION AREAS.

SPECIFIC CONSTRUCTION NOTES

(hexagon)	NUMBERS ABOVE 100 IN A HEXAGON ON THE PLAN REFER TO THE RESPECTIVE STANDARD DRAWING AND SHALL BE CONSTRUCTED ACCORDINGLY, UNLESS MODIFICATIONS ARE NOTED ON THE PLAN. ANY NUMBER SHOWN BELOW THE STANDARD DRAWING NUMBER INDICATES THE SPECIFIC ALTERNATE TO BE CONSTRUCTED.
ADJ/GV	ADJUST THE WATER GATE VALVE COVER TO THE FINISHED GRADE.
ADJ/ETS	ADJUST GAS ETS TO GRADE (BY GAS COMPANY)
ADJ/IRR	ADJUST IRRIGATION BOX TO GRADE.
REL/MB	RELOCATE MAIL BOX OR REPLACE WITH EQUIVALENT.
REL/BW	REMOVE AND RECONSTRUCT BLOCK WALL IN KIND.
REL/CLF	RELOCATE CHAIN LINK FENCE TO 0.5' OUTSIDE OF RIGHT OF WAY (NOTE: REUSE EXISTING FENCE FABRIC AND USE NEW IN KIND POSTS).
REL/SRF	RELOCATE/RECONSTRUCT SPLIT RAIL FENCE TO 0.5' OUTSIDE OF RIGHT OF WAY.
W1	WATER METER WILL BE ADJUSTED TO GRADE BY CONTRACTOR.
W2	WATER METER WILL BE RELOCATED BY PUBLIC UTILITIES DEPARTMENT, WATER DIVISION
E	ELECRTICAL POLE OR RISER WILL BE RELOCATED BY PUBLIC UTILITIES DEPARTMENT, ELECTRICAL DIVISION.
C/S1	CONSTRUCT STRUCTURAL SECTION OF 3" AC OVER 6" CRUSHED AGGREGATE BASE.
OL/VAR	OVERLAY EXISTING PAVEMENT WITH VARIABLE THICKNESS ARHM-GG (0.10' MIN.).
T/II	TRANSPLANT CLASS II PALM TREE.
PIP	PROTECT IN PLACE (DESCRIPTION PER PLAN).
REL/SGN	RELOCATE SIGN (DESCRIPTION PER PLAN)

NORWOOD AVE
SCALE: NTS

STA 10+00 – STA 26+30

2' MIN. @ 1% MIN.

* EXISTING CURB, GUTTER AND SIDEWALK DOES NOT EXIST BEYOND STATION 22+20

** FULL WIDTH IMPROVEMENTS ALREADY EXIST BETWEEN THE FOLLOWING STATIONS : 11+44.30 – 12+66.65, 15+46.95 – 19+15.28
SEE PLAN FOR LOCATION OF EXISTING SIDEWALK WITH JOINS

*** OVERLAY MAY VARY TO PROVIDE STRAIGHT GRADE TO NEW EDGE OF PAVEMENT

PROJECT LOCATION

1. LA SIERRA AVENUE – E'LY SIDE BETWEEN HOLE AVE. AND GRAMERCY PL.
2. NORWOOD AVENUE – NW'LY SIDE BETWEEN GOLDEN AVE. AND LA SIERRA AVE.

PROJECT LOCATION MAP

0 KM. 4 KM. 8 KM 12 KM.
0' 4,000' 8,000' 16,000' 24,000' 32,000' 40,000' 48,000'

SCALE: 1" = 8,000'

EXISTING UNDERGROUND UTILITIES:

- SANITARY SEWER — 8"S
- WATER LINE — 6"W
- STORM DRAIN — 24"SD
- GAS LINE — 3"G
- ABANDONED UTILITY — 6"G(ABAN'D.)
- TELEPHONE CONDUIT — T — T
- ELECTRICAL CONDUIT — E — E
- ELECTROLIER LIGHTING CONDUIT — ELC
- TRAFFIC SIGNAL — SIG — SIG
- FIRE ALARM — F — F

EXISTING TOPOGRAPHY:

- BLOCK WALL
- BOARD FENCE
- WIRE FENCE
- CHAIN LINK FENCE
- TOP OF SLOPE
- TOE OF SLOPE
- DIRECTION OF FLOW
- SANITARY SEWER M.H.
- SANITARY SEWER CLEANOUT (C.O.)
- STORM DRAIN M.H.
- IRRIGATION WEIR
- WATER M.H.
- GAS M.H.
- ELECTRIC M.H.
- TELEPHONE M.H.
- WATER METER
- FIRE HYDRANT
- SPRINKLER HEAD
- VALVE
- AIR VALVE
- AIR VENT
- BUS STOP SIGN
- BLOW-OFF VALVE (B.O.)
- IRRIGATION STAND PIPE (SP)
- CONCRETE
- ASPHALT
- BUILDING
- EDGE OF PAVEMENT
- POLE & GUY ANCHOR
- POWER POLE (PP)
- TELEPHONE POLE (T)
- TELEPHONE RISER (T)
- JOINT USE POLE (J)
- PULL BOX
- TRAFFIC SIGN
- PARKING METER
- FIRE ALARM BOX (F)
- STREET NAME SIGN
- GAS METER (G)
- MAIL BOX
- FAUCET
- WALK-DON'T WALK PEDESTRIAN SIGNAL
- ELECTRICAL TEST STATION
- WHEEL STOP
- A.C. BERM
- PEDESTRIAN PUSH BUTTON (PPB)
- RAILROAD TRACKS
- RAILROAD SIGN
- RAILROAD SIGNAL
- TRAFFIC SIGNAL
- TRAFFIC SIGNAL ON MAST ARM
- TRAFFIC SIGNAL CONTROLLER
- TRAFFIC SIGNAL PRESSURE DETECTOR
- TRAFFIC SIGNAL LOOP DETECTOR
- STREET LIGHT & TRAFFIC SIGNAL ON MAST ARM
- STREET LIGHT (UPRIGHT)
- STREET LIGHT ON MAST ARM
- STEEL POST
- WOOD POST

SHEET INDEX

SHEET NUMBER	DESCRIPTION
1	TITLE SHEET
2	LA SIERRA AVE SIDEWALK CONSTRUCTION FROM HOLE AVENUE TO GRAMERCY PLACE
3	NORWOOD AVENUE STREET IMPROVEMENTS (FROM GOLDEN AVENUE TO LA SIERRA) STA. 10+00 TO 15+00
4	NORWOOD AVENUE STREET IMPROVEMENTS (FROM GOLDEN AVENUE TO LA SIERRA) STA. 15+50 TO 21+50
5	NORWOOD AVENUE STREET IMPROVEMENTS (FROM GOLDEN AVENUE TO LA SIERRA) STA. 21+50 TO 26+30

* AS-BUILT PER PLANS 4-2-04 LH

BENCHMARK: G1-J3
P.K. NAIL AND CITY ENGR. TAG IN THE EASTERLY WING OF A CATCH BASIN AT TEH B.C.R. OF THE SOUTHWESTLY CURB RETURN AT LA SIERRA AVENUE AND NORWOOD AVE.
ELEV. – 729.556

IMPORTANT NOTICE
Section 4216/4217 of the Government Code requires a Dig Alert Identification Number to be issued before a "Permit to Excavate" will be valid. For your Dig Alert I.D. Number call
CALL TOLL FREE
48 HOURS BEFORE YOU DIG
UNDERGROUND SERVICE ALERT
1-800-227-2600

ENGINEER IN RESPONSIBLE CHARGE
MICHAEL KATUSIAN
R.C.E. No. 36686 expires 6/30/04
DATE 5/15/03

REGISTERED PROFESSIONAL ENGINEER – MICHAEL KATUSIAN – No. 36686 – Exp. 6-30-04 – CIVIL – STATE OF CALIFORNIA

MARK	REVISIONS	APPR	DATE

DESIGNED BY FYL DRAWN BY FYL CHECKED BY

CITY OF RIVERSIDE, CALIFORNIA
PUBLIC WORKS DEPARTMENT

APPROVED BY	BY	DATE
PRINCIPAL ENGINEER	DL	5/15/03
CONSTRUCTION ADMI.		
SURVEYOR		
STREET SERVICES		
TRAFFIC ENGINEER		
PARK & REC. DEP.		

APPROVED BY
CITY ENGINEER
DATE 5/15/03

SIDEWALK CONSTRUCTION (2002/2003)

HORIZ. SCALE: 1" = 100'

ACCT. NO.:
LA SIERRA AVE.: 9545927152-440223XX
NORWOOD AVE.: 9546027152-440223XX

R-3687

SHEET 1 OF 5

FILE: LFRANK\G:\DWG\R3687-01

INDEXED 5-20-03 LH

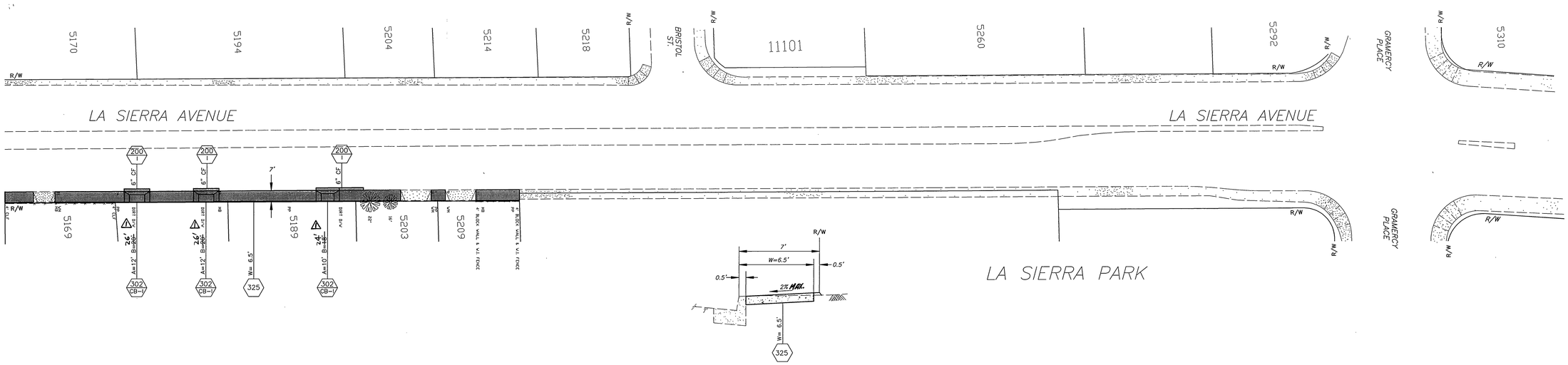

SIDEWALK TYPICAL SECTION
(NTS)

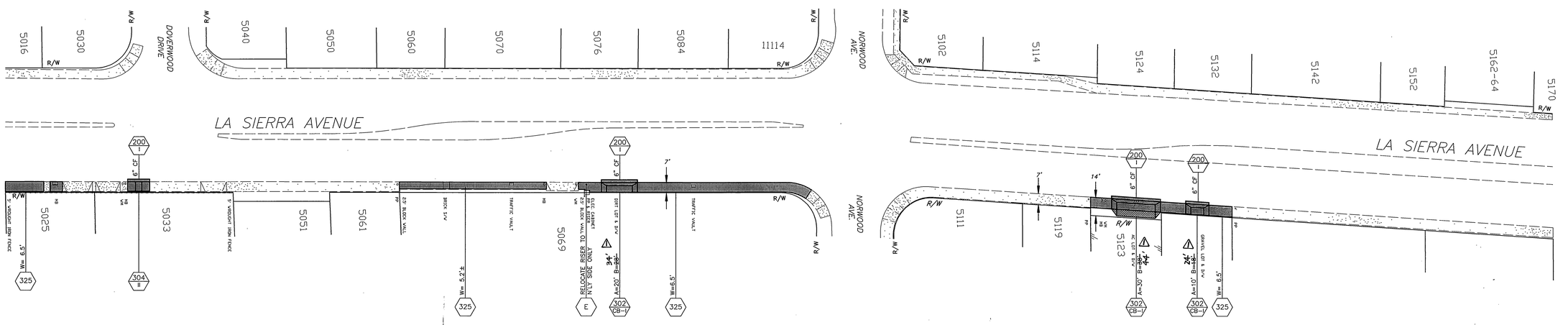

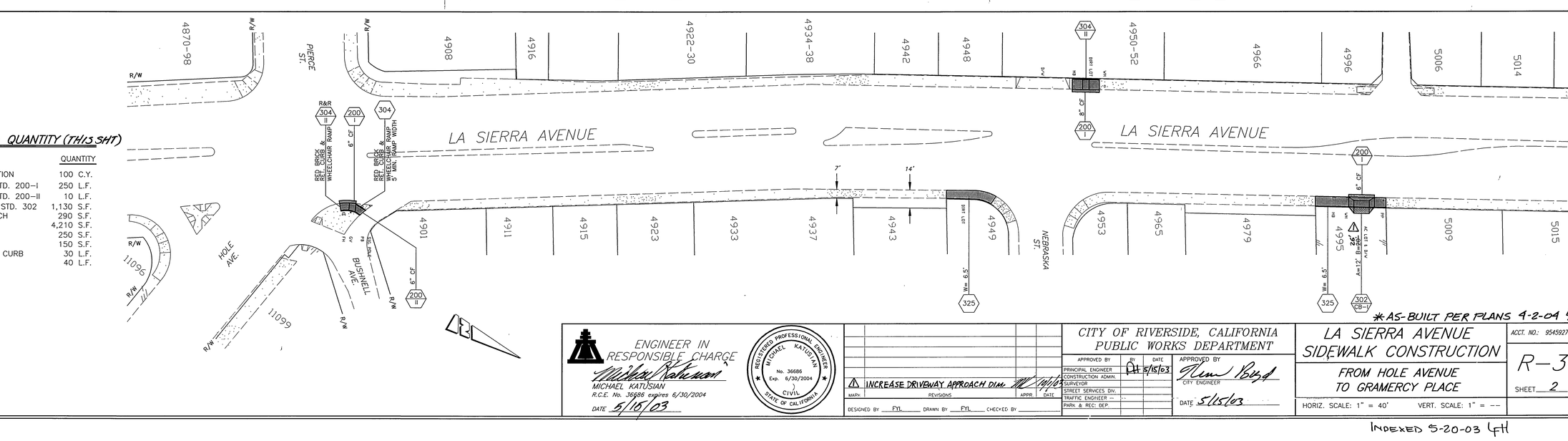

EXTIMATED QUANTITY (THIS SHT)

ITEM	QUANTITY
1. UNCLASSIFIED EXCAVATION	100 C.Y.
2. CURB AND GUTTER, STD. 200-I	250 L.F.
3. CURB AND GUTTER, STD. 200-II	10 L.F.
4. DRIVEWAY APPROACH, STD. 302	1,130 S.F.
5. AC DRIVEWAY APPROACH	290 S.F.
6. SIDEWALK, STD. 325	4,210 S.F.
7. WHEELCHAIR RAMP	250 S.F.
7. RED BRICK RAMP	150 S.F.
8. RED BRICK RETAINING CURB	30 L.F.
9. RETAINING CURB	40 L.F.

ENGINEER IN RESPONSIBLE CHARGE
MICHAEL KATUSIAN
R.C.E. No. 36686 expires 6/30/2004
DATE 5/15/03

REGISTERED PROFESSIONAL ENGINEER
MICHAEL KATUSIAN
No. 36686
Exp. 6/30/2004
CIVIL
STATE OF CALIFORNIA

⚠ INCREASE DRIVEWAY APPROACH DIM. 11/18/03
MAP# REVISIONS APPR. DATE

DESIGNED BY FYL DRAWN BY FYL CHECKED BY

CITY OF RIVERSIDE, CALIFORNIA
PUBLIC WORKS DEPARTMENT

APPROVED BY	BY	DATE
PRINCIPAL ENGINEER		
CONSTRUCTION ADMIN.	FH	5/15/03
SURVEYOR		
STREET SERVICES DIV.		
TRAFFIC ENGINEER		
PARK & REC. DEP.		

APPROVED BY
CITY ENGINEER
DATE 5/15/03

LA SIERRA AVENUE SIDEWALK CONSTRUCTION

FROM HOLE AVENUE TO GRAMERCY PLACE

HORIZ. SCALE: 1" = 40' VERT. SCALE: 1" = --

ACCT. NO.: 9545927152-440223XX

R-3687

SHEET 2 OF 5

*AS-BUILT PER PLANS 4-2-04 FH

INDEXED 5-20-03 FH

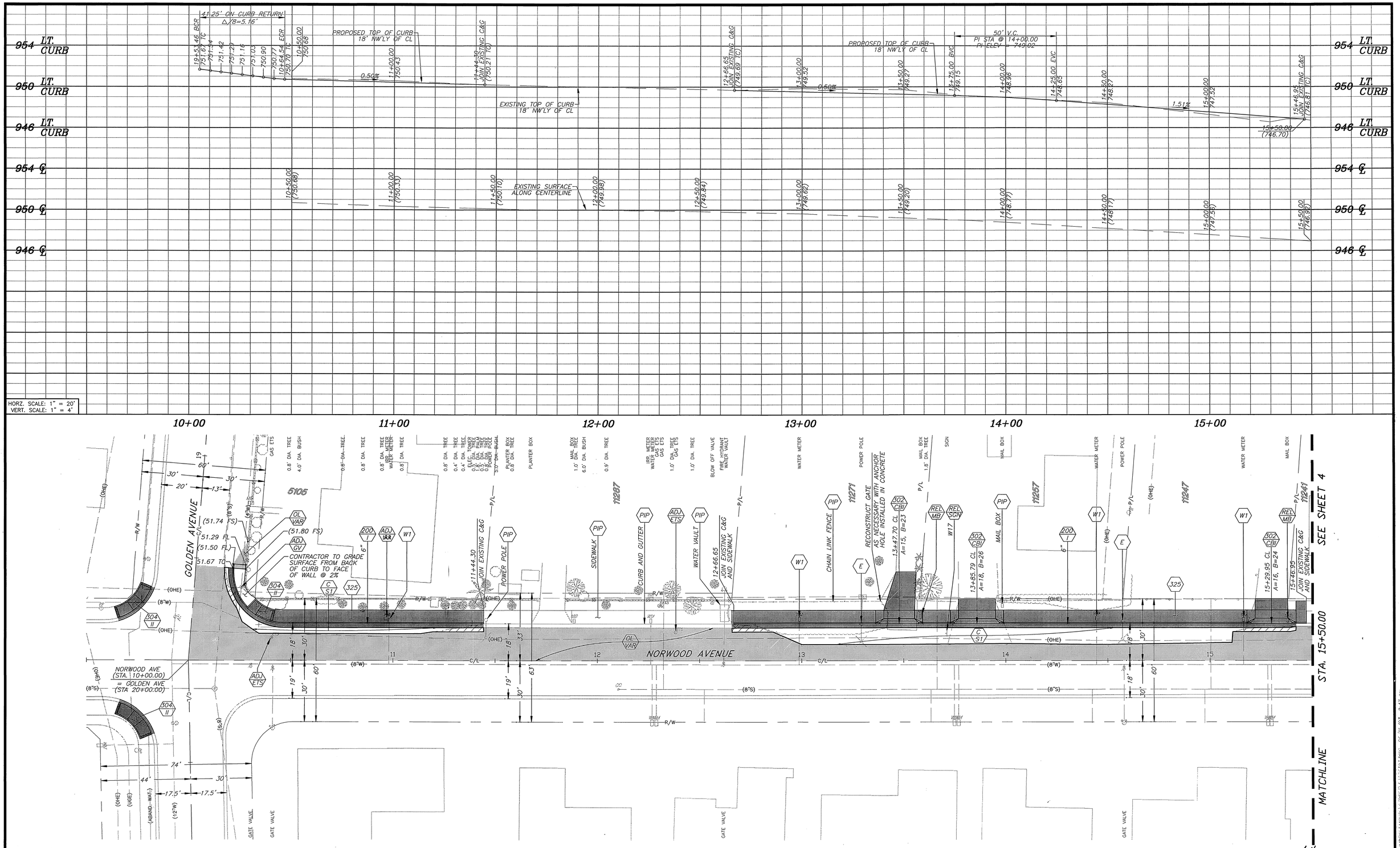

*AS-BUILT PER PLANS 4-2-04 4H

ENGINEER IN RESPONSIBLE CHARGE
MICHAEL KATUSIAN
R.C.E. No. 36686 expires 6/30/04
DATE 5/15/03

REGISTERED PROFESSIONAL ENGINEER MICHAEL KATUSIAN No. 36686 Exp. 6-30-04 CIVIL STATE OF CALIFORNIA

MARK	REVISIONS	APPR.	DATE

DESIGNED BY EL DRAWN BY EL CHECKED BY MK

CITY OF RIVERSIDE, CALIFORNIA
PUBLIC WORKS DEPARTMENT

APPROVED BY	BY	DATE
PRINCIPAL ENGINEER		
CONSTRUCTION ADMIN		
SURVEYOR		
STREET SERVICES		
TRAFFIC ENGINEER		
PARK & REC. DEP.		

APPROVED BY
CITY ENGINEER
DATE 5/15/03

NORWOOD AVENUE STREET IMPROVEMENTS
(FROM GOLDEN AVENUE TO LA SIERRA AVENUE)
STA. 10+00 TO STA.15+50
HORIZ. SCALE: 1"=20' VERT. SCALE: 1"=4'

ACCT. NO. 9546027152-440223
R-3687
SHEET 3 OF 5
FILE NO.

INDEXED 5-20-03 4H

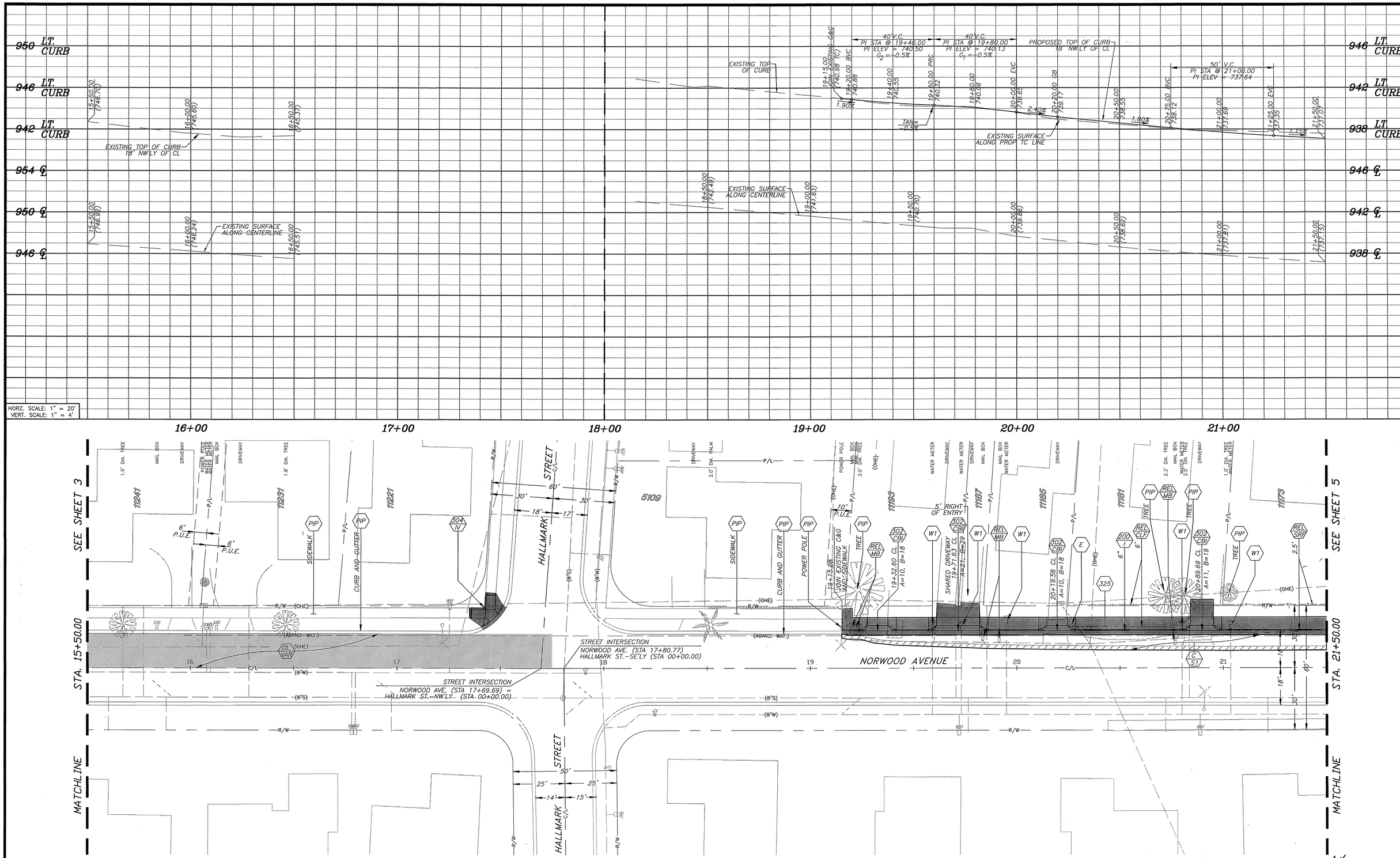

*AS-BUILT PER PLANS 4-2-04 GH

ENGINEER IN RESPONSIBLE CHARGE
MICHAEL KATUSIAN
R.C.E. No. 36686 expires 6/30/04
DATE 5/15/03

REGISTERED PROFESSIONAL ENGINEER MICHAEL KATUSIAN No. 36686 Exp. 6-30-04 CIVIL STATE OF CALIFORNIA

MARK	REVISIONS	APPR.	DATE

DESIGNED BY EL DRAWN BY EL CHECKED BY MK

CITY OF RIVERSIDE, CALIFORNIA
PUBLIC WORKS DEPARTMENT

APPROVED BY	BY	DATE
PRINCIPAL ENGINEER	DH	5/15/03
CONSTRUCTION ADMIN.		
SURVEYOR		
STREET SERVICES		
TRAFFIC ENGINEER		
PARK & REC. DEP.		

APPROVED BY
CITY ENGINEER
DATE 5/15/03

NORWOOD AVENUE STREET IMPROVEMENTS
(FROM GOLDEN AVENUE TO LA SIERRA AVENUE)
STA. 15+50 TO STA. 21+50

HORIZ. SCALE: 1"=20' VERT. SCALE: 1"=4'

ACCT. NO. 9546027152-440223

R-3687

SHEET 4 OF 5

FILE NO.

INDEXED 5-20-03 GH

HORZ. SCALE: 1" = 20'
VERT. SCALE: 1" = 4'

22+00 23+00 24+00 25+00 26+00 27+00

942 LT. CURB / 938 LT. CURB / 934 LT. CURB / 942 ℄ / 938 ℄ / 934 ℄

934 LT. CURB / 930 LT. CURB / 926 LT. CURB / 934 ℄ / 930 ℄ / 926 ℄

21+50.00 737.07 / 21+60.00 GB 736.96 — 1.15%
22+00.00 736.59 — 1.41%
22+50.00 735.69 / 22+60.00 GB 735.55
23+00.00 735.01
23+50.00 734.34 — 1.34%
24+00.00 734.67
24+50.00 733.00 — IDENTICAL POINT
24+70.00 GB 731.73
25+00.00 732.29 — 1.48%
25+40.00 GB 731.78
25+50.00 731.58 — 1.13%
25+80.00 731.25
26+00.00 731.03
26+29.44 730.69
26+50.00 730.61

PROPOSED TOP OF CURB 18' NW'LY OF CL
EXISTING SURFACE ALONG PROP TC LINE
PROPOSED TOP OF CURB 18' NW'LY OF CL
EXISTING SURFACE ALONG PROP TC LINE
PROPOSED TOP OF CURB 20' NW'LY OF CL
JOIN EXISTING C&G
EXISTING TOP OF CURB 20' NW'LY OF CL

21+50.00 (737.15)
22+00.00 (736.42)
22+50.00 (735.75)
23+00.00 (735.00)
23+50.00 (734.31)
24+00.00 (733.65)
24+50.00 (733.02) — IDENTICAL POINT
24+50.00 (733.02)
25+00.00 (732.42)
25+50.00 (731.89)
26+00.70 (731.34)
26+50.00 (730.89)
27+00.00 (730.29)

EXISTING SURFACE ALONG CENTERLINE
EXISTING SURFACE ALONG CENTERLINE

SEE SHEET 4

STA. 21+50

MATCHLINE

REMOVE PORTION OF LOG FENCE AS NECESSARY
REMOVE SMALL PALMS AND PLACE ON OWNER PROPERTY
SHARED DRIVEWAY 22+35.50 CL A=32, B=40
6' P.U.E.
REMOVE ROSES AND OTHER MISC. PLANTS
PROP. S/W BEHIND EXISTING TREE
REMOVE EXISTING TREE AND PLANT NEW TREE ON PROPERTY LINE
RECONSTRUCT/JOIN CONCRETE WALK
PLANTER
POWER POLE
SHARED DRIVEWAY 26+04.44 CL A=32, B=40
JOIN EXISTING C&G AND SIDEWALK
SIDEWALK
CURB AND GUTTER

21+74.15 CL A=12, B=20
23+23.95 CL A=19, B=27
24+49.92 CL A=12, B=20
24+88.21 CL A=20, B=28
25+25.76 CL A=11, B=19

NORWOOD AVENUE
STREET INTERSECTION
NORWOOD AVE. (STA 22+20.54) = ROSE AVE. (STA 00+00.00)
STREET INTERSECTION
NORWOOD AVE. (STA 24+83.59) = PRUITT PL. (STA 00+00.00)
ROSE AVENUE
PRUITT PLACE
LA SIERRA AVENUE
LA SIERRA AVENUE

* AS-BUILT PER PLANS 4-2-04 GH

ENGINEER IN RESPONSIBLE CHARGE
Michael Katusian
MICHAEL KATUSIAN
R.C.E. No. 36686 expires 6/30/04
DATE 5/15/03

REGISTERED PROFESSIONAL ENGINEER — MICHAEL KATUSIAN — No. 36686 Exp. 6-30-04 — CIVIL — STATE OF CALIFORNIA

MARK | REVISIONS | APPR. | DATE

DESIGNED BY EL DRAWN BY EL CHECKED BY MK

CITY OF RIVERSIDE, CALIFORNIA
PUBLIC WORKS DEPARTMENT

APPROVED BY	BY	DATE
PRINCIPAL ENGINEER		
CONSTRUCTION ADMIN.	EL	5/15/03
SURVEYOR		
STREET SERVICES		
TRAFFIC ENGINEER		
PARK & REC. DEP.		

APPROVED BY
CITY ENGINEER
DATE 5/15/03

NORWOOD AVENUE STREET IMPROVEMENTS
(FROM GOLDEN AVENUE TO LA SIERRA AVENUE)
STA. 21+50 TO STA. 26+30

HORIZ. SCALE: 1"=20' VERT. SCALE: 1"=4'

ACCT. NO. 9546027152-440223

R-3687

SHEET 5 OF 5

FILE NO.

INDEXED 5-20-03 GH