STREET IMPROVEMENT PLANS
TRACT 30625

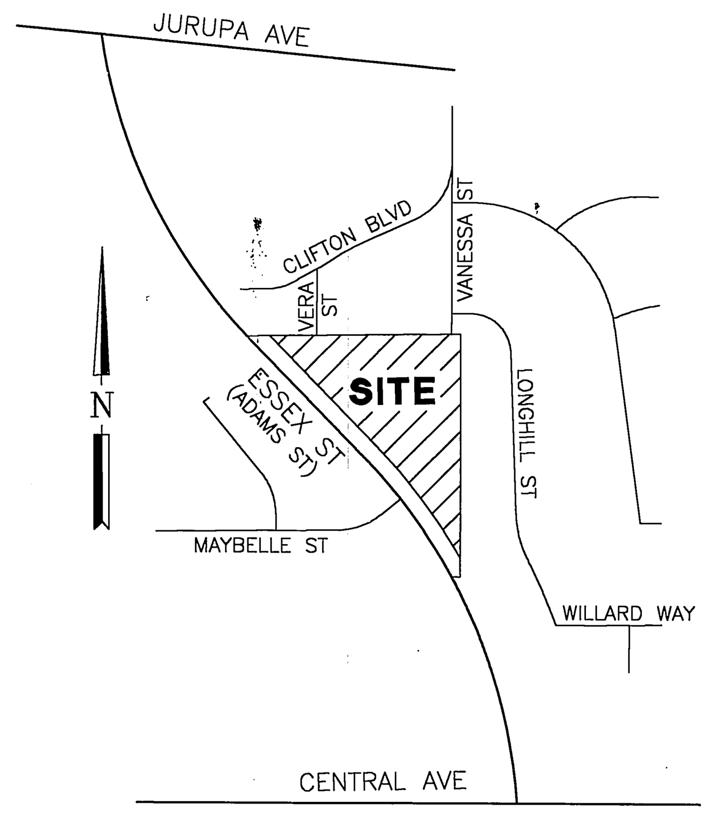

LOCATION MAP
NTS

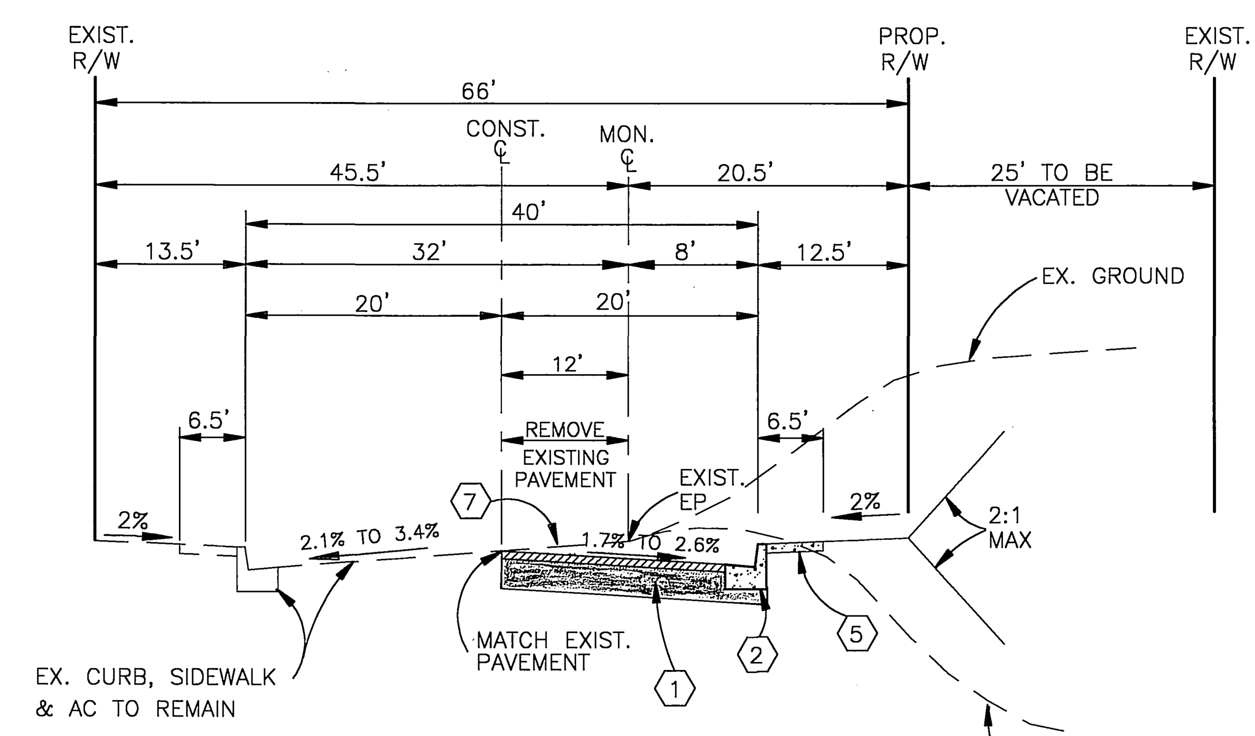

ESSEX STREET
TYPICAL SECTION
10+00.00 TO 19+00.00
NTS
T.I.=7.0

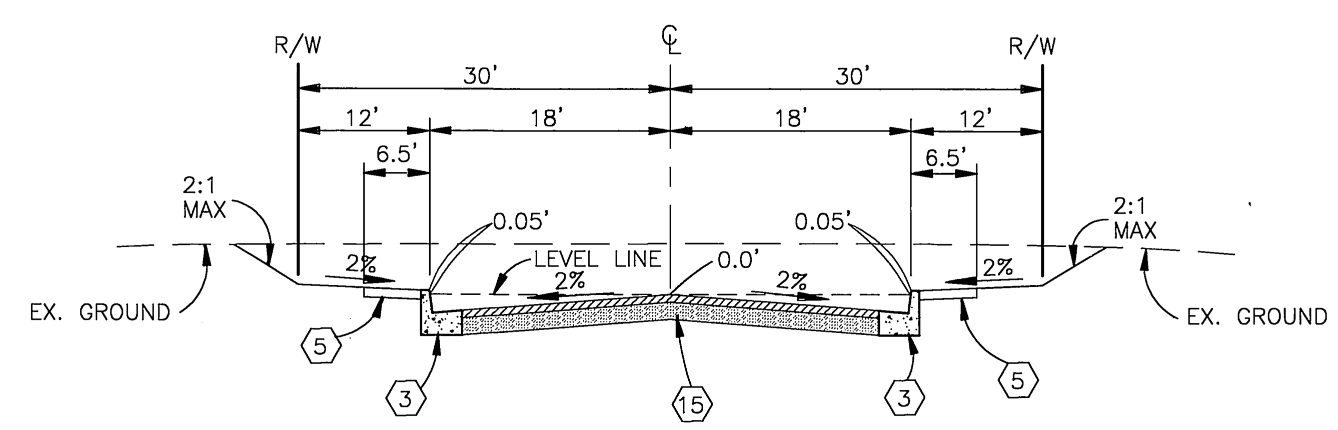

SIMON COURT
TYPICAL SECTION
0+00.00 TO END
NTS
T.I.=5.0

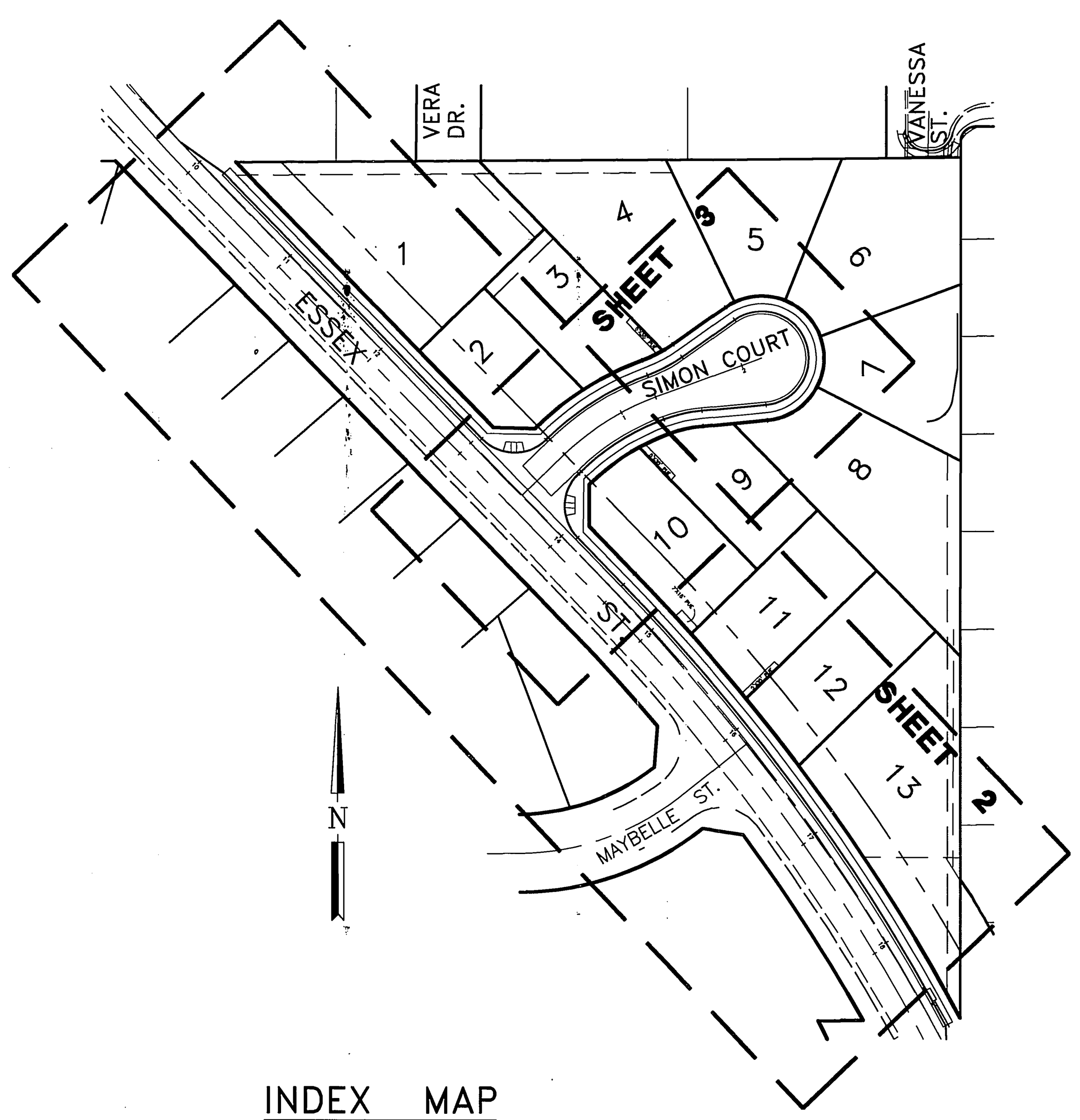

INDEX MAP
NTS

GENERAL NOTES

1. NO PERSON SHALL PERFORM ANY CONSTRUCTION ACTIVITY OR INSTALL ANY OBJECTS WITHIN THE PUBLIC RIGHTS-OF-WAY OR EASEMENTS OF THE CITY OF RIVERSIDE WITHOUT A VALID CONSTRUCTION PERMIT OR, A STREET OPENING PERMIT OR AN ENCROACHMENT PERMIT ISSUED BY THE CITY'S PUBLIC WORKS DEPARTMENT.
2. IT SHALL BE THE RESPONSIBILITY OF THE CONTRACTOR TO CLEAR THE RIGHT OF WAY IN ACCORDANCE WITH THE PROVISIONS OF LAW AS IT AFFECTS EACH UTILITY INCLUDING IRRIGATION LINES AND APPURTENANCES AND AT NO COST TO THE CITY.
3. CONSTRUCTION SHALL BE IN ACCORDANCE WITH THE CITY OF RIVERSIDE DEPARTMENT OF PUBLIC WORKS, STANDARD DRAWINGS, ITS SUPPLEMENTAL NOTES AND THE STANDARD SPECIFICATIONS FOR PUBLIC WORKS CONSTRUCTION, CURRENT EDITION.
4. THE PRIVATE ENGINEER SIGNING THESE PLANS IS RESPONSIBLE FOR ASSURING THE ACCURACY AND ACCEPTABILITY OF THE WORK HEREON. IN THE EVENT OF DISCREPANCIES ARISING DURING CONSTRUCTION, THE PRIVATE ENGINEER SHALL BE RESPONSIBLE FOR DETERMINING AN ACCEPTABLE SOLUTION AND REVISING THE PLANS FOR APPROVAL BY THE CITY.
5. QUANTITIES SHOWN ARE FOR INFORMATION ONLY AND THE CITY OF RIVERSIDE IS NOT RESPONSIBLE FOR THEIR ACCURACY.
6. THE DEVELOPER SHALL BE RESPONSIBLE FOR PRESERVING OR RE-ESTABLISHING AND REFERENCING SURVEY MONUMENTS DESTROYED, DISTURBED OR BURIED AS A RESULT OF CONSTRUCTION SHOWN HEREON.
7. ALL FLAGGED ELEVATIONS SHALL BE STAKED IN THE FIELD BY THE PRIVATE ENGINEER.
8. WHERE NEW PAVEMENT IS TO JOIN THE EXISTING PAVEMENT THE EDGE OF THE EXISTING PAVEMENT SHALL BE TRIMMED IN A SMOOTH AND STRAIGHT LINE. CONSTRUCT MATCH-UP PAVING AS SHOWN ON PLAN AND OVERLAY PAVING AS DIRECTED IN THE FIELD TO PRODUCE A SMOOTH SECTION.
9. CONSTRUCT DRIVEWAY APPROACHES PER STANDARD DRAWING 302. EXACT SIZE AND LOCATION TO BE STAKED BY THE PRIVATE ENGINEER PRIOR TO CONSTRUCTION OF CURB AND GUTTER.
10. THE SUBDIVIDER SHALL ARRANGE FOR A SOIL TEST TO BE MADE BY SOILS ENGINEER AFTER THE STREETS HAVE BEEN PREPARED TO ROUGH GRADE AND PRIOR TO CURB AND GUTTER CONSTRUCTION. DEPTH OF BASE MATERIAL AND A.C. PAVING SHALL BE DETERMINED BY THE CITY OF RIVERSIDE DESIGN STANDARDS AND TEST PROCEDURES.
11. ON ALL AREAS WITHIN PUBLIC RIGHT OF WAY WHERE THE FILL IS ONE (1) FOOT OR GREATER, A LETTER WILL BE REQUIRED FROM THE SOILS ENGINEER, CERTIFYING THE COMPACTION OF THE FILL BELOW SUBGRADE, PRIOR TO ISSUANCE OF THE CONSTRUCTION PERMIT/CUT SHEETS.
12. THE CONTRACTOR SHALL CALL IN A LOCATION REQUEST TO UNDERGROUND SERVICE ALERT (USA), PHONE # 1-800-227-2600 TWO WORKING DAYS BEFORE DIGGING. NO CONSTRUCTION PERMIT WILL BE ISSUED BY THE PUBLIC WORKS DEPARTMENT INVOLVING EXCAVATION FOR UNDERGROUND FACILITIES UNLESS THE APPLICANT HAS BEEN PROVIDED AN INQUIRY IDENTIFICATION NUMBER BY U.S.A.
13. ALL TRAFFIC SIGNS SHALL BE INSTALLED PRIOR TO OPENING THE STREETS TO TRAFFIC.
14. ANY TRAFFIC CONTROL STRIPING OBLITERATED AND/OR BADLY WORN DURING CONSTRUCTION SHALL BE RESTORED BY THE CONTRACTOR WITHIN FIVE DAYS AFTER NOTIFICATION FROM THE CITY INSPECTORS.
15. FINAL STRIPING FOR TRAFFIC CONTROL AND/OR PAVEMENT MARKING TO BE THE RESPONSIBILITY OF THE DEVELOPER.
16. THE CONTRACTOR SHALL COORDINATE TRENCHING FOR CABLE TELEVISION WITH OTHER TRENCHING WITHIN THE SUBDIVISION.
17. DEVELOPER TO GIVE CITY WATER DIVISION FIVE (5) WORKING DAYS WRITTEN NOTICE PRIOR TO START OF CONSTRUCTION AND TO ALLOW CITY TEN (10) WORKING DAYS FOR COMPLETION OF WORK. (909 351-6368)
18. CONTRACTOR IS RESPONSIBLE FOR INSTALLATION OF STREET LIGHTS AND UNDERGROUND ELECTRIC UTILITY FACILITIES. CONTACT RIVERSIDE PUBLIC UTILITIES 45 DAYS IN ADVANCE OF CONSTRUCTION TO OBTAIN APPROVED STREET LIGHT AND ELECTRIC PLANS
    CONTACT: BILL MAINORD
    PH. NO. (909) 826-5393
    3900 MAIN ST. 4TH FLOOR
    RIVERSIDE, CA 92522

GENERAL NOTES FOR STREET TREE PLANTING AND RELOCATION

1. ALL RELATED WORK SHALL CONFORM TO THE CITY OF RIVERSIDE PARK AND RECREATION DEPARTMENT STANDARDS AND CITY OF RIVERSIDE STREET TREE POLICIES.
2. WHEN CALLING FOR INSPECTIONS CONTACT THE STREET TREE INSPECTOR A MINIMUM OF 48 HOURS IN ADVANCE AT (909) 351-6126 TO SCHEDULE AN INSPECTION. A FIELD NOTICE WILL BE ISSUED AS WRITTEN APPROVAL FOR EACH STAGE OF INSPECTION. A VERBAL APPROVAL WILL NOT BE ACCEPTABLE. INSPECTIONS ARE REQUIRED:
   A. AFTER COMPLETION OF FINAL GRADING OF THE LOTS AND WHEN ALL UTILITY SERVICES AND SEWER LATERALS HAVE BEEN MARKED, BUT PRIOR TO DIGGING PLANT PITS, ALL FINAL STREET TREE LOCATIONS ARE TO BE SPOTTED IN THE FIELD BY THE STREET TREE INSPECTOR;
   B. WHILE DIGGING PLANT PITS AND PLANTING / RELOCATING TREES;
   C. AFTER PLANTING AND ALL OTHER INDICATED OR SPECIFIED WORK HAS BEEN COMPLETED, FOR START OF MAINTENANCE;
   D. AT END OF THE MAINTENANCE PERIOD, THE CONTRACTOR/DEVELOPER SHALL CALL THE STREET TREE INSPECTOR AT (909)351-6126 FOR A FINAL ACCEPTANCE INSPECTION IN ORDER TO BE RELEASED FROM MAINTENANCE. DEVELOPERS BONDS WILL NOT BE RELEASED UNTIL AFTER RECEIPT OF WRITTEN NOTIFICATION FROM THE CITY THAT THE TREES PASS FINAL INSPECTION AND THE PARK AND RECREATION DEPARTMENT IS ASSUMING MAINTENANCE RESPONSIBILITIES.
3. ALL STREET TREES ARE TO BE PLANTED PRIOR TO OCCUPANCY.
4. THE DEVELOPER SHALL BE RESPONSIBLE TO ACCEPTABLY MAINTAIN ALL PLANTINGS FOR A PERIOD OF ONE (1) YEAR.
5. STREET TREE PLANTING SHALL BE AS FOLLOWS:

STREET NAME	BOTANICAL NAME/COMMON NAME	SIZE	SPACING	REQUIRED
ESSEX ST.		15 GAL	45'	22
SIMON CT.		15 GAL	45'	3

6. ALL STREET TREES MUST BE AUTOMATICALLY IRRIGATED, EXCEPT WHERE ADJACENT TO SINGLE FAMILY OR DUPLEX RESIDENTIAL USE.

NOTE: IN THE INTEREST OF PUBLIC SAFETY AND MAINTENANCE THE STREET TREE INSPECTOR SHALL HAVE THE AUTHORITY TO REVISE THE STREET TREE QUANTITIES AND LOCATIONS SHOWN OF THE APPROVED PLANS BASED UPON FIELD CONDITIONS FOUND AT THE TIME OF INSTALLATION OF THE TREES.

CONSTRUCTION NOTES

STANDARD DRAWINGS REFERRED TO ARE THOSE OF THE CITY OF RIVERSIDE DEPARTMENT OF PUBLIC WORKS UNLESS OTHERWISE NOTED

1. CONST. 2.5" A.C. ON 16.5" C.A.B. PER SOILS REPORT #1602 R=14
2. CONST. TYPE I 8" CURB & 24" GUTTER PER STD. NO. 200.
3. CONST. TYPE I 6" CURB & 24" GUTTER PER STD. NO. 200.
4. INSTALL CROSS GUTTER PER STD. NO. 220 (10' WIDE)
5. INSTALL SIDEWALK PER STD. NO. 325
6. INSTALL WHEELCHAIR RAMP PER STD. NO. 304 (TYPE I)
7. REMOVE AC PAVEMENT.
8. INSTALL F-1 FLEXIBLE DELINEATORS (20' O.C. MAX)
9. INSTALL 2"X4" REDWOOD HEADER.
10. INSTALL STREET NAME SIGNS PER STD. NO. 662.
11. ADJUST EXISTING SEWER MANHOLE TO GRADE
12. PLANT STREET TREES PER CITY OF RIVERSIDE, PARKS AND RECREATION DEPARTMENT STD. DWG. NO. 1001,1002 & 4034
13. CONSTRUCT CATCH BASIN PER STD. NO. 405 (W=10', V=PER PLAN)
14. CONSTRUCT 8" AC BERM PER STD. NO. 250 (TYPE I)
15. CONST. 2.5" A.C. ON 9.5" C.A.B. PER SOILS REPORT #1602 R=14
16. INSTALL R1 (STOP) SIGN PER STD. DWG. 666
17. REMOVE EXISTING 6" CURB & GUTTER
18. REMOVE EXISTING CONC. SIDEWALK
19. CONSTRUCT 6" CONC. CURB (TYPE II) PER STD. NO. 200 (MOD.)
20. CONSTRUCT 12' WIDE DRIVEWAY (TYPE CURB-I) PER STD. NO. 302 (A=12', B=19')
21. CONSTRUCT 5' WIDE SIDEWALK PER STD. NO. 325 (MOD.)

TRAFFIC AND STREET NAME SIGN SCHEDULE		
10	ESSEX STREET	6300
	SIMON COURT	5900
16	R1 (STOP)	30"

ENGINEER'S NOTICE TO CONTRACTOR

THE EXISTENCE AND LOCATION OF ANY UNDERGROUND UTILITIES OR STRUCTURES SHOWN ON THESE PLANS ARE OBTAINED BY A SEARCH OF AVAILABLE RECORDS, TO THE BEST OF OUR KNOWLEDGE, THERE ARE NO EXISTING UTILITIES EXCEPT THOSE SHOWN ON THESE PLANS. THE CONTRACTOR IS REQUIRED TO TAKE DUE PRECAUTIONARY MEASURES TO PROTECT THE UTILITY LINES SHOWN ON THESE DRAWINGS. THE CONTRACTOR FURTHER ASSUMES ALL LIABILITY AND RESPONSIBILITY FOR THE UTILITY PIPES, CONDUITS OR STRUCTURES SHOWN OR NOT SHOWN ON THESE DRAWINGS.

THE CONTRACTOR AGREES THAT HE SHALL ASSUME SOLE AND COMPLETE RESPONSIBILITY FOR THE JOB SITE CONDITIONS DURING THE COURSE OF CONSTRUCTION OF THIS PROJECT, INCLUDING SAFETY OF ALL PERSONS AND PROPERTY, THAT THIS SHALL APPLY CONTINUOUSLY AND NOT BE LIMITED TO NORMAL WORKING HOURS, AND THAT THE CONTRACTOR SHALL DEFEND, INDEMNIFY, AND HOLD THE OWNER AND THE ENGINEER HARMLESS FROM ANY AND ALL LIABILITY, REAL OR ALLEGED, IN CONNECTION WITH THE PERFORMANCE OF WORK ON THIS PROJECT, EXCEPTING FOR LIABILITY ARISING FROM THE SOLE NEGLIGENCE OF THE OWNER OR THE ENGINEER.

CONTRACTOR SHALL VERIFY ALL CONDITIONS AND DIMENSIONS AND SHALL REPORT ALL DISCREPANCIES TO THE ENGINEER PRIOR TO THE COMMENCEMENT OF WORK.

Underground Service Alert
CALL BEFORE YOU DIG
Call: TOLL FREE
1-800
227-2600
TWO WORKING DAYS BEFORE YOU DIG

CITY OF RIVERSIDE BUSINESS TAX CERTIFICATE NO. 56642 EXP. 4-20-03

*AS-BUILT PER PLANS 7-07-05 LH

PACIFIC TELEPHONE COMPANY		SOUTHERN CALIFORNIA GAS COMPANY	
APPROVED BY (signature)	DATE 4/24/03	APPROVED BY (signature)	DATE 4/22/03
CITY OF RIVERSIDE - PUBLIC UTILITIES, ELECTRIC		CITY OF RIVERSIDE WATER SYSTEM (FOR SHEETS 1-3)	
APPROVED BY Bill Mainord	DATE 4.17.03	APPROVED BY (signature)	DATE 4/21/03

BENCH MARK: H4-C3
PK & CITY ENG TAG AT BASE OF TRAFFIC SIGNAL AT N/W COR OF JURUPA & FREEMONT
ELEV. 790.277

PREPARED BY:
RMW
RICHARDS MUETING WILKES
PLANNING & ENGINEERING
6529 Riverside Ave., Ste. 115
Riverside, CA 92506
Phone: (909) 276-8010 Fax: (909) 276-8013
MICHAEL O. MUETING R.C.E. 35165 EXP. 9-30-03
DATE 4-17-03

MARK	REVISIONS	APPR.	DATE

DESIGNED BY G.R.W. DRAWN BY G.R.W. CHECKED BY M.M.

CITY OF RIVERSIDE
PUBLIC WORKS DEPARTMENT

APPROVED BY	DATE	BY
PRINCIPAL ENGINEER	5/12/2003	
PARK DEPARTMENT		
TRAFFIC DIVISION	4/22/03	
STREET SERVICES	5/5/3	

APPROVED BY (signature) CITY ENGINEER
DATE 5/13/03

STREET IMPROVEMENT PLAN
TRACT 30625
TITLE SHEET
HORZ. SCALE: N.T.S. VERT. SCALE:

ACCOUNT NO.
DRAWING NUMBER
R-3691
SHEET 1 OF 3

NAME: TITLEALT.DWG.DWG DATE: APR 14, 2003 TIME: 10:06 AM

INDEXED 7-29-03 LH

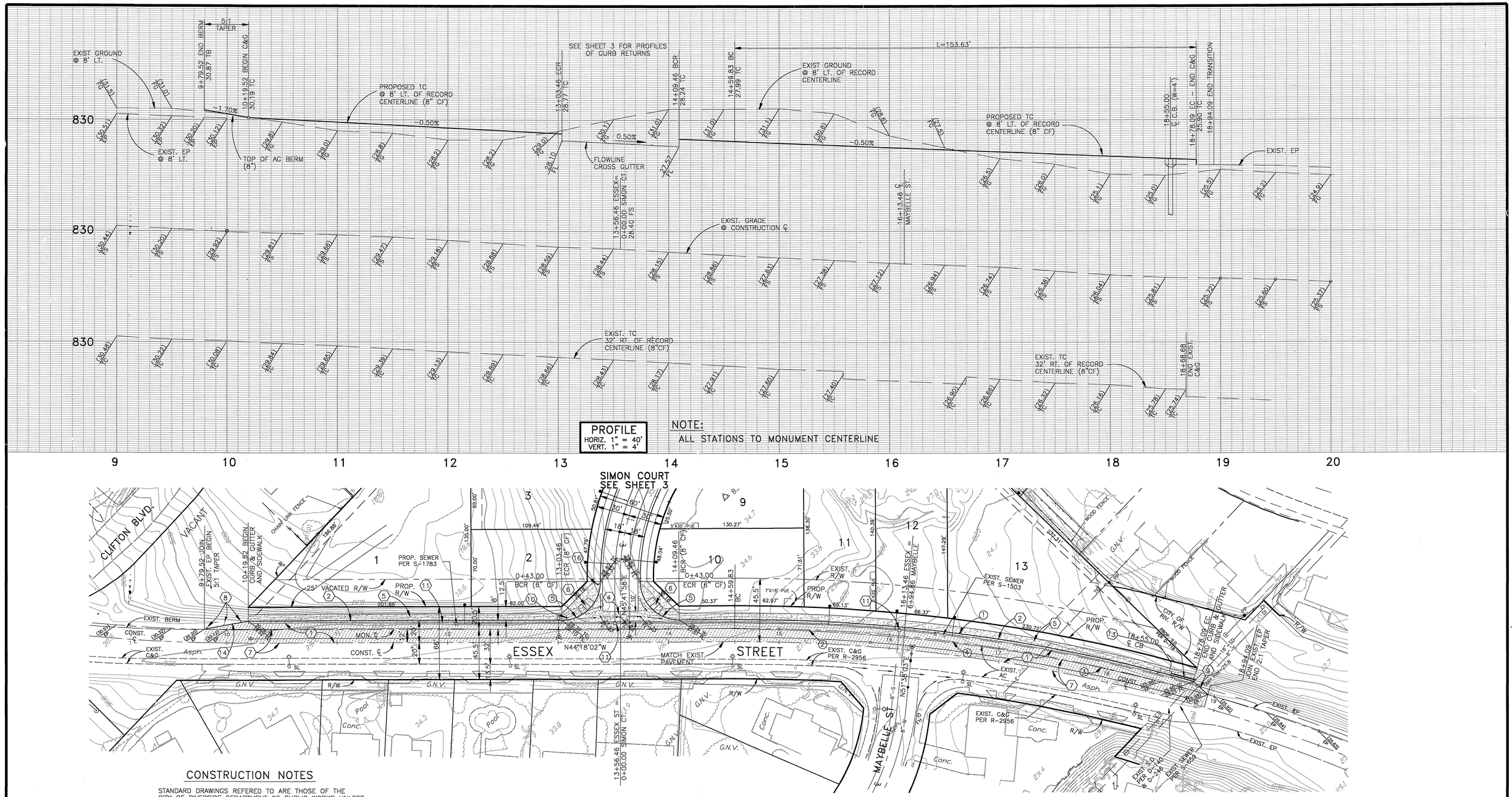

PROFILE
HORIZ. 1" = 40'
VERT. 1" = 4'

NOTE:
ALL STATIONS TO MONUMENT CENTERLINE

CONSTRUCTION NOTES

STANDARD DRAWINGS REFERED TO ARE THOSE OF THE CITY OF RIVERSIDE DEPARTMENT OF PUBLIC WORKS UNLESS OTHERWISE NOTED

1. CONST. 2.5" A.C. ON 16.5" C.A.B. PER SOILS REPORT #1602 R=14
2. CONST. TYPE I 8" CURB & 24" GUTTER PER STD. NO. 200.
4. INSTALL CROSS GUTTER PER STD. NO. 220 (10' WIDE)
5. INSTALL SIDEWALK PER STD. NO. 325
6. INSTALL WHEELCHAIR RAMP PER STD. NO. 304 (TYPE I)
7. REMOVE AC PAVEMENT.
8. INSTALL F-1 FLEXIBLE DELINEATORS (20' O.C. MAX)
9. INSTALL 2"X4" REDWOOD HEADER.
10. INSTALL STREET NAME SIGNS PER STD. NO. 662.
11. ADJUST SEWER MANHOLE TO GRADE
12. PLANT STREET TREES PER CITY OF RIVERSIDE, PARKS AND RECREATION DEPARTMENT STD. DWG. NO. 1001,1002 & 4034
13. CONSTRUCT CATCH BASIN PER STD. NO. 405 (W=10', V=8')
14. CONSTRUCT 8" AC BERM PER STD. NO. 250 (TYPE I)
16. INSTALL R1 (STOP) SIGN PER STD. DWG. 666

REGISTERED PROFESSIONAL ENGINEER — MICHAEL O. MUETING — No. 35165 Exp. 9-30-03 CIVIL — STATE OF CALIFORNIA

SCALE
40 0 20 40 80
(IN FEET)
1 inch = 40 ft.

CURVE DATA

	△	R	L	T	COMMENT
1	15°58'35"	1508'	420.50'	211.62'	CURB
2	05°52'06"	1500'	153.63'	76.88'	℄ – BC TO MAYBELLE
3	10°43'12"	1500'	280.65'	140.74'	℄ – MAYBELLE TO END CONST.
4	16°35'18"	1500'	434.28'	218.67'	℄ – BC TO END CONST.
5	90°00'00"	35'	54.98'	35.00'	CURB RETURN

*AS-BUILT PER PLANS 7-07-05 GH

Underground Service Alert
DIAL BEFORE YOU DIG
Call: TOLL FREE 1-800 227-2600
TWO WORKING DAYS BEFORE YOU DIG

BENCH MARK: H4-C3

PK & CITY ENG TAG AT BASE OF TRAFFIC SIGNAL AT N/W COR OF JURUPA & FREEMONT
ELEV. 790.277

PREPARED BY:
RICHARDS MUETING WILKES
PLANNING & ENGINEERING
6529 Riverside Ave., Ste. 115
Riverside, CA 92506
Phone: (909) 276-8010 Fax: (909) 276-8013
MICHAEL O. MUETING R.C.E. 35165 EXP. 9-30-03
4-17-03 DATE

MARK	REVISIONS	APPR.	DATE

DESIGNED BY G.R.W. DRAWN BY G.R.W. CHECKED BY M.M.

CITY OF RIVERSIDE
PUBLIC WORKS DEPARTMENT

APPROVED BY	DATE	BY
PRINCIPAL ENGINEER	5/12/03	
PARK DEPARTMENT		
TRAFFIC DIVISION	4/23/03	
STREET SERVICES	5/8/03	

APPROVED BY _____ CITY ENGINEER
DATE 5/12/03

STREET PLAN & PROFILE
TRACT 30625
ESSEX STREET
STA. 9+79.52 TO 18+94.09

ACCOUNT NO.
DRAWING NUMBER R-3691
SHEET 2 OF 3

HORZ. SCALE: 1"=40' VERT. SCALE: 1"=4'

INDEXED 7-20-03 GH

NAME: ESSEXALT.DWG DATE: APR 14, 2003 TIME: 10:02 AM

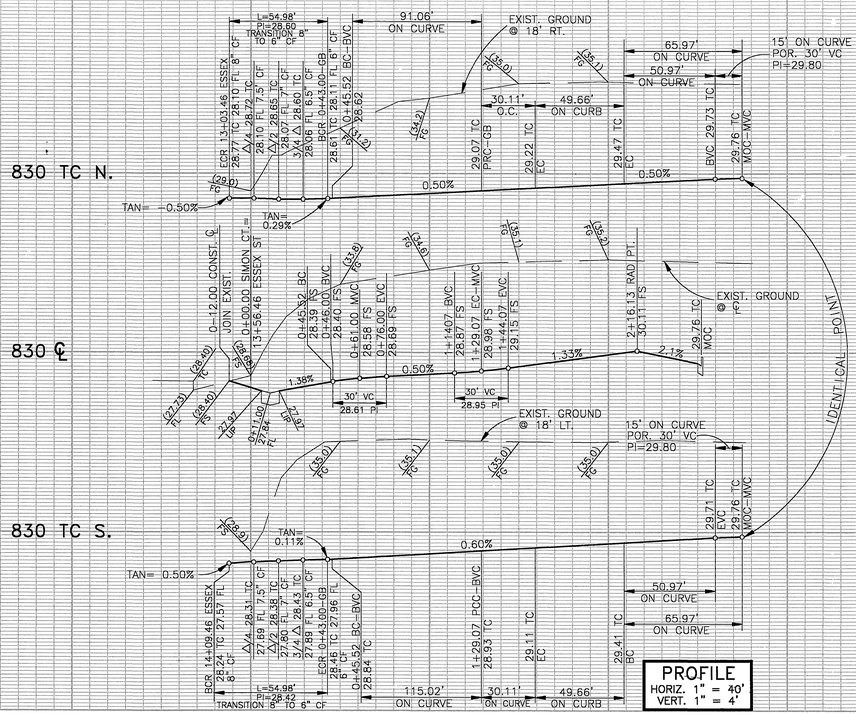

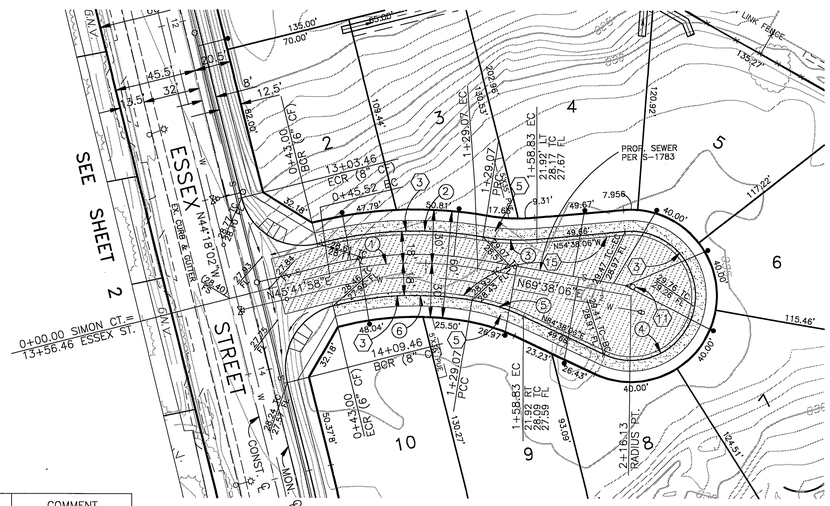

CURVE DATA

	△	R	L	T	COMMENT
1	23°56'08"	200'	83.55'	42.39'	℄
2	23°56'08"	218'	91.07'	46.21'	CURB
3	15°00'00"	115'	30.11'	15.14'	CURB
4	210°00'00"	36'	131.94'	---	CURB
5	15°00'00"	115'	30.11'	15.14'	CURB
6	23°55'30"	182'	76.00'	38.56'	CURB

SIMON COURT

SCALE

40 0 20 40 80

(IN FEET)
1 inch = 40 ft.

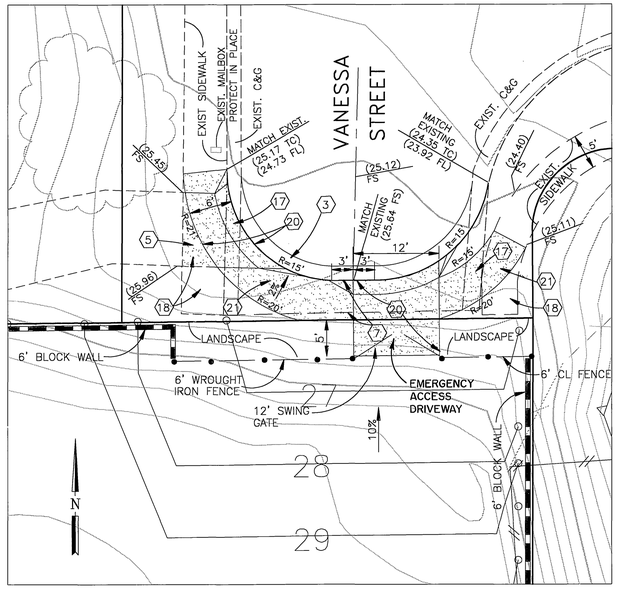

DRIVEWAY DETAIL @ VENESSA STREET

SCALE: 1"=10'

CONSTRUCTION NOTES

STANDARD DRAWINGS REFERED TO ARE THOSE OF THE CITY OF RIVERSIDE DEPARTMENT OF PUBLIC WORKS UNLESS OTHERWISE NOTED

(3) CONST. TYPE I 6" CURB & 24" GUTTER PER STD. NO. 200.
(5) INSTALL SIDEWALK PER STD. NO. 325
(7) REMOVE AC PAVEMENT.
(11) ADJUST SEWER MANHOLE TO GRADE
(12) PLANT STREET TREES PER CITY OF RIVERSIDE, PARKS AND RECREATION DEPARTMENT STD. DWG. NO. 1001,1002 & 4034
(15) CONST. 2.5" A.C. ON 9.5" C.A.B. PER SOILS REPORT #1602 R=14
(17) REMOVE EXISTING 6" CURB & GUTTER
(18) REMOVE EXISTING CONC. SIDEWALK
(20) CONSTRUCT 12' WIDE DRIVEWAY (TYPE CURB-I) PER STD. NO. 302 (A=12', B=19')
(21) CONSTRUCT 5' WIDE SIDEWALK PER STD. NO. 325 (MOD.)

Underground Service Alert
CALL BEFORE YOU DIG
Call: TOLL FREE
1-800
227-2600
TWO WORKING DAYS BEFORE YOU DIG

BENCH MARK: H4-C3

PK & CITY ENG TAG AT BASE OF TRAFFIC SIGNAL AT N/W COR OF JURUPA & FREEMONT
ELEV. 790.277

PREPARED BY:
RICHARDS MUETING WILKES
PLANNING & ENGINEERING
6529 Riverside Ave., Ste. 115
Riverside, CA 92506
Phone: (909) 276-8010 Fax: (909) 276-8013

MICHAEL O. MUETING R.C.E. 35165 EXP. 9-30-05 — 4-17-03 DATE

REGISTERED PROFESSIONAL ENGINEER
MICHAEL O. MUETING
No. 35165
Exp. 9-30-03
CIVIL
STATE OF CALIFORNIA

MARK	REVISIONS	APPR.	DATE

DESIGNED BY G.R.W. DRAWN BY G.R.W. CHECKED BY M.M.

CITY OF RIVERSIDE
PUBLIC WORKS DEPARTMENT

	APPROVED BY	DATE	BY
PRINCIPAL ENGINEER		5/14/2003	
PARK DEPARTMENT			
TRAFFIC DIVISION		4/22/03	
STREET SERVICES		5/15/03	

APPROVED BY
CITY ENGINEER
DATE 5/14/03

*AS-BUILT PER PLANS 7-07-05 LH

STREET PLAN & PROFILE
TRACT 30625
SIMON COURT

ACCOUNT NO.
DRAWING NUMBER R-3691
SHEET 3 OF 3

HORZ. SCALE: 1"=40' VERT. SCALE: 1"=4'

INDEXED 7-28-03 LH

NAME: ASTREETALT.DWG DATE: APR 14, 2003 TIME: 9:60 AM