RIVERSIDE CITY OF RIVERSIDE CALIFORNIA

PUBLIC WORKS DEPARTMENT

LA SIERRA AVE LANDSCAPE IMPROVEMENTS
(FROM CLEVELAND AVE TO INDIANA AVE)

CONSTRUCTION NOTES:

- W5 — IRRIGATION WATER METER AND LATERAL POINT OF CONNECTION (STATION PER PLAN). WATER SERVICE SUMMARY TABLE SHOWN SHEET NO. 8 SHALL BE COMPLETE FOR EACH POINT OF CONNECTION.
- 1 — INSTALL BACKFLOW DEVICE PER DETAIL NO. 2 SHOWN ON SHEET 8.
- 2 — INSTALL BALL ASSEMBLY VALVE PER DETAIL NO. 1 SHOWN ON SHEET 8.
- 3 — INSTALL 3" DIAMETER PVC SCH 40 SLEEVING, EXTENDING 1' INTO PLANTING AREA OF MEDIAN, WITH 24" OF COVER. INSTALL 1-1/2" IRRIGATION SUPPLY LINE FROM BALL VALVE ASSEMBLY TO PROPOSED MEDIAN. (ADDITIONAL SLEEVING AND PIPE REQUIRED BETWEEN LANDSCAPED AREAS AS PART OF THE IRRIGATION DESIGN FOR THE ENTIRE PROJECT.)
- 4 — CONNECT TO THE PROPOSED UNDERGROUND ELECTRICAL FACILITY TO SERVE THE 12-STATION IRRIGATION CONTROLLER SHOWN ON THE PLAN PER DETAIL NO. 8 SHOWN ON SHEET 8.
- 5 — INSTALL 12-STATION IRRIGATION CONTROLLER PER DETAIL NO. 6 SHOWN ON SHEET 8.
- 6 — INSTALL 2" DIA PVC SCH 40 SLEEVING, EXTENDING 1' INTO PLANTING AREA OF MEDIAN WITH 24" COVER MIN. TERMINATING IN A BROOKS #3 PULLBOX OR CITY APPROVED EQUAL W/ TRAFFIC COVER, AT EACH END FOR IRRIGATION CONTROL WIRES. (ADDITIONAL SLEEVING REQUIRED BETWEEN LANDSCAPED AREAS AS PART OF THE IRRIGATION DESIGN FOR THE ENTIRE PROJECT.)
- 7 — LANSCAPE HEDGE SHALL BE PLANTED ON SCHOOL GROUNDS ADJACENT TO THE WROUGHT IRON FENCE AND IRRIGATED FROM THE CITY'S IRRIGATION SYSTEM. CONNECTIONS FROM THE IRRIGATION SYSTEM SHALL EXTEND BENEATH THE PROPOSED RECREATIONAL TRAIL AND WROUGHT IRON FENCE.

GENERAL NOTES FOR PUBLIC LANDSCAPES:

1. ALL RELATED WORK SHALL CONFORM TO THE CITY OF RIVERSIDE PARK AND RECREATION DEPARTMENT STANDARDS AND SPECIFICATIONS FOR PLANTING AND IRRIGATION WORK. (SPECIFICATIONS SECTION 02210, 02441, 02480, AND 02481).
2. ONE FOOT THICK OF CLASS "A" TOP SOIL IN THE PROPOSED LANDSCAPE AREAS. THE SOIL SHALL BE COMPACTED TO 85% RELATIVE COMPACTION IN PLANTING TO FINISHED GRADE & 95% RELATIVE COMPACTION BENEATH THE DECORATIVE STAMPED CONCRETE. ALLOW FOR SOIL AMENDMENTS PER SECTION 02480 OF THE SPECIAL PROVISIONS. THE TREE WELL AREAS REQUIRE MORE EXTENSIVE SOIL REMOVAL AND TREATMENTS PER PARK DEPARTMENT TREE PLANTING SPECIFICATIONS.
3. WHEN CALLING FOR INSPECTIONS CONTACT THE ENGINEER A MINIMUM OF 48 HOURS (TWO WORKING DAYS) IN ADVANCE AT (951)826-5889 TO SCHEDULE AN INSPECTION. A LANDSCAPE INSPECTOR CARD WILL BE ISSUED FOR EACH STAGE OF INSPECTION. THE CONTRACTOR IS REQUIRED TO OBTAIN APPROVAL PRIOR TO COMMENCING WITH NEXT SCHEDULE TASK, A VERBAL APPROVAL WILL NOT BE ACCEPTABLE. INSPECTINS ARE REQUIRED PER THE STANDARD SPECIFICATION, AND INCLUDE BUT ARE NOT NECESSARILY LIMITED TO THE FOLLOWING:
   - a. AFTER COMPLETION OF FINAL GRADING OF THE MEDIAN AREA AND WHEN ALL UTILITY SERVICES HAVE BEEN MARKED, BUT PRIOR TO INITIATING ANY LANDSCAPE WORK;
   - b. AT TIME OF INSTALLATION OF IRRIGATION SYSTEMS AND CONSTRUCT PRESSURE MAINLINES, BUT PRIOR TO BACKFILL OF TRENCHES (NOTE: MAINLINES MUST BE PRESSURE TESTED IN THE PRESENCE OF LANDSCAPE INSPECTOR WITH 48 HOURS NOTICE.)
   - c. AT TIME OF INSTALLATION OF IRRIGATION VALVES, LATERALS AND HEADS;
   - d. FOR SPOTTING OF ALL TREES PRIOR TO DIGGING PLANTING PITS;
   - e. WHILE DIGGING PLANT PITS AND PLANTING/RELOCATING TREES;
   - f. AFTER PLANTING AND ALL OTHER INDICATED OR SPECIFIED WORK HAS BEEN COMPLETED, FOR START OF MAINTENANCE;
   - g. AT SUBSTANTIAL COMPLETION OF THE PROJECT FOR CITY'S ACCEPTANCE TO START THE REQUIRED MAINTENANCE PERIOD;
   - h. AT THE COMMENCEMENT & COMPLETION, THE CONTRACTOR SHALL CALL THE ENGINEER AT (951)826-5889 FOR A FINAL ACCEPTANCE INSPECTION IN ORDER TO BE RELEASED FROM MAINTENANCE. CONTRACT BONDS WILL NOT BE RELEASED UNTIL AFTER RECEIPT OF WRITTEN NOTIFICATION FROM THE CITY THAT THE PROJECT HAS PASSED FINAL ACCEPTANCE INSPECTION AND THE CITY IS ASSUMING MAINTENANCE RESPONSIBILITIES.
4. IN THE INTEREST OF PUBLIC SAFTEY AND MAINTENANCE, THE ENGINEER SHALL HAVE THE AUTHORITY TO REVISE THE TREE AND SHRUB QUANTITIES AND LOCATIONS SHOWN OF APPROVED PLANS BASED UPON FIELD CONDITIONS FOUND AT THE TIME OF INSTALLATION OF THE SHRUBS AND TREES.
5. THE CONTRACTOR SHALL BE REPONSIBLE TO MAINTAIN ALL STREET TREES FOR A MINIMUM OF ONE YEAR (365) CONSECUTIVE CALENDAR DAYS AND TO MAINTAIN ALL SHRUBS AND SODS FOR A MINIMUM OF 90 CONSECUTIVE CALENDARD DAYS UNTIL ACCEPTED BY THE PARK AND RECREATION DEPARTMENT FOR ONGOING MAINTENANCE.

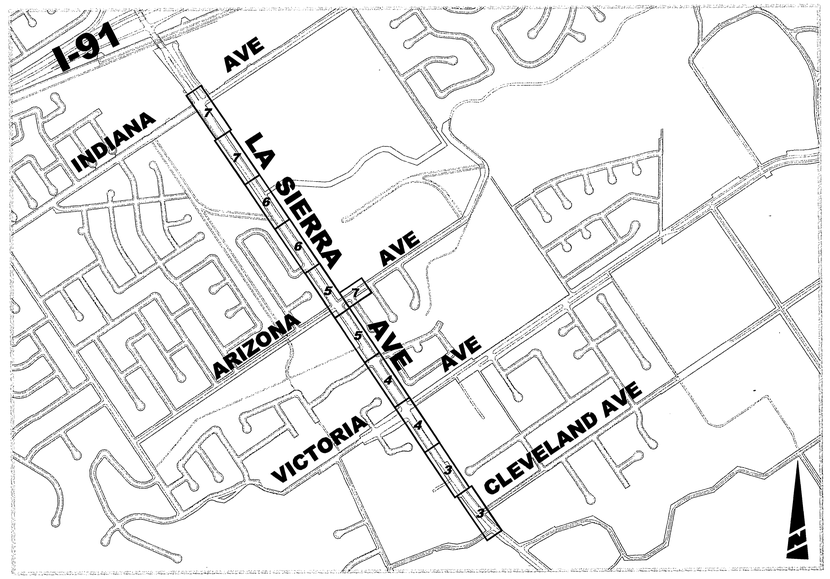

LOCATION/INDEX MAP
1"=800'

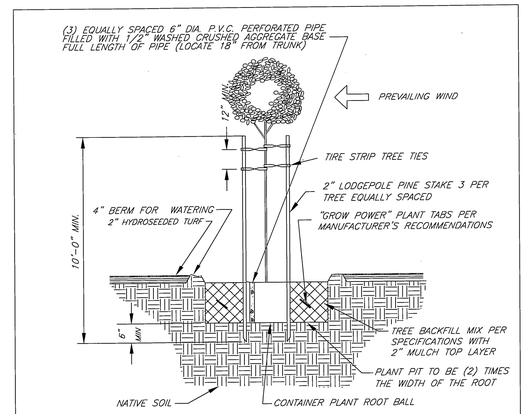

MEDIAN TREE PLANTING / STAKING DETAIL
NTS

NOTES:
1. STAKES SHALL NOT PIERCE ROOTBALL AND SHALL EXTEND INTO UNDISTURBED SOIL.
2. PLACE "GROW POWER" TABS IN PLANT CONTAINER PRIOR TO PLANTING FOR OBSERVATION PURPOSES.

PLANTING NOTES:

1. CONTRACTOR SHALL CALL THE ENGINEER'S ATTENTION TO SITE CONDITIONS WHICH PREVENT HIS INSTALLATION PER PLAN IN A REASONABLE MANNER.
2. REPLACEMENT OF DAMAGED OR DESTROYED PLANTINGS SHALL TAKE PLACE WITHIN 48 HOURS OF NOTIFICATION BY THE ENGINEER, OR SAID REPLACEMENT ITEMS SHALL BE DEDUCTED FROM THE CONTRACTOR'S FINAL BILLING.
3. REPLACEMENT ITEMS SHALL BE EXACT DUPLICATE OF ORIGINAL WORK OR PLANTS, UNLESS OTHERWISE APPROVED BY THE ENGINEER.
4. IRRIGATION SYSTEM SHALL BE INSTALLED PRIOR TO PLANT MATERIAL.
5. TREES SHALL BE PLANTED AFTER CONCRETE PLACEMENT, BUT NOT BEFORE IRRIGATION COVERAGE HAS BEEN APPROVED.
6. PLACE TREES BETWEEN SPRAY HEADS WHEREVER POSSIBLE.
7. A SITE SHALL BE PRE-SELECTED BY THE ENGINEER FOR PLANT DELIVERY AND APPROVAL AND FOR MIXING OF BACKFILL.
8. CLEAN-UP SHALL TAKE PLACE ON A DAILY BASIS UNLESS OTHERWISE APPROVED BY THE CITY'S REPRESENTATIVE.
9. MAINTENANCE PERIOD SHALL BE A MINIMUM OF ONE YEAR (365) CONSECUTIVE CALENDER DAYS FOR STREET TREES AND A MINIMUM OF NINETY (90) CONSECUTIVE CALENDER DAYS FOR SHRUBS AND SODS FROM DATE OF ACCEPTANCE. MAINTENANCE SHALL INCLUDE BI-WEEKLY WEED AND RODENT ABATEMENT PROCEDURES INCLUDING FOLIAR APPLICATION OF CHELATED IRON AND TRACE MINERALS 90 DAYS APART.

SHEET INDEX:

SHEET NO.	DESCRIPTION
L1	TITLE SHEET, LANDSCAPING NOTES, AND LANDSCAPING DETAILS
L2	TYPICAL PLANTING LAYOUTS, PLANTING AND IRRIGATION LEGENDS
L3	LA SIERRA AVENUE STREET IMPROVEMENTS (STA 122+00 TO STA 131+00)
L4	LA SIERRA AVENUE STREET IMPROVEMENTS (STA 131+00 TO STA 143+00)
L5	LA SIERRA AVENUE STREET IMPROVEMENTS (STA 143+00 TO STA 155+00)
L6	LA SIERRA AVENUE STREET IMPROVEMENTS (STA 155+00 TO STA 167+00)
L7	LA SIERRA AVENUE STREET IMPROVEMENTS (STA 167+00 TO STA 177+00)
	ARIZONA AVENUE STREET IMPROVEMENTS (STA 41+00 TO STA 43+30)
L8	IRRIGATION NOTES AND DETAILS

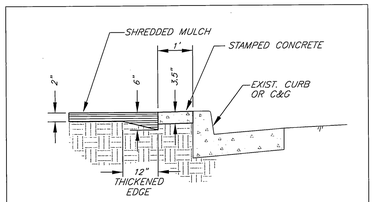

SHREDDED MULCH IN PLANT BED (TYP.)
NTS

NOTE:
1. MULCH TO BE UNIFORMLY APPLIED THROUGHOUT THE SHRUB AREAS EXCEPT WITHIN TREE BASINS (EXCLUDES TURF AREAS).

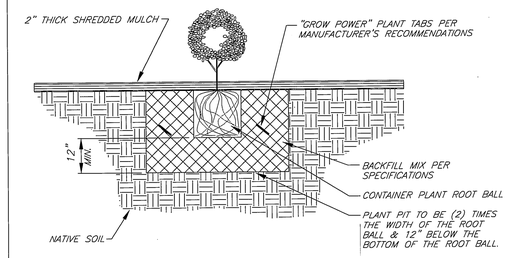

CONTAINER PLANTING MEDIAN PLANTER
NTS

NOTES:
1. UNTANGLE MATTED ROOTS BY LOOSENING ALL ROOTS AT EDGE OF ROOT BALL WITH WATER FROM HOSE. DO NOT CRACK ROOT BALL.
2. PLACE "GROW POWER" TABS IN PLANT CONTAINER PRIOR TO PLANTING FOR OBSERVATION PURPOSES.

ENGINEER IN RESPONSIBLE CHARGE
MICHAEL KATUSIAN
R.C.E. No. 36686 expires 6/30/06
DATE 8/31/05

REGISTERED PROFESSIONAL ENGINEER MICHAEL KATUSIAN No. 36686 Exp. 6-30-06 CIVIL STATE OF CALIFORNIA

MARK	REVISIONS	APPR.	DATE

DESIGNED BY F.L. DRAWN BY F.L. CHECKED BY M.K.

APPROVED BY	BY	DATE
PRINCIPAL ENGINEER	DH	9/1/05
CONSTRUCTION ADMIN.	RC	9/1/05
SURVEYOR	—	—
STREET SERVICES	DB	9/1/05
TRAFFIC ENGINEER	—	—
PARK & REC. DEP.	[illegible]	9/1/05

CITY OF RIVERSIDE, CALIFORNIA
PUBLIC WORKS DEPARTMENT
APPROVED BY
CITY ENGINEER
DATE 9/1/05

LA SIERRA AVENUE LANDSCAPE IMPROVEMENTS
(FROM CLEVELAND AVENUE TO INDIANA AVENUE
TITLE SHEET, LANDSCAPING NOTES, AND LANDSCAPING DETAILS
HORIZ. SCALE: N/A VERT. SCALE: N/A

ACCOUNT. NO. 9576127152-440223
WORK ORDER. NO. 0802072
R-3739L
SHEET L1 OF 8
FILE NO.

INDEXED 6-12-06 [illegible]

G:\COMMON\MIKE'S GROUP\PROJECTS\STREETS\LA SIERRA-INDIANA TO CLEVELAND\DRAWINGS\PLANS\IMPROVEMENTS\LANDSCAPE\R3739L-01.DWG 08/31/05 3:37 pm

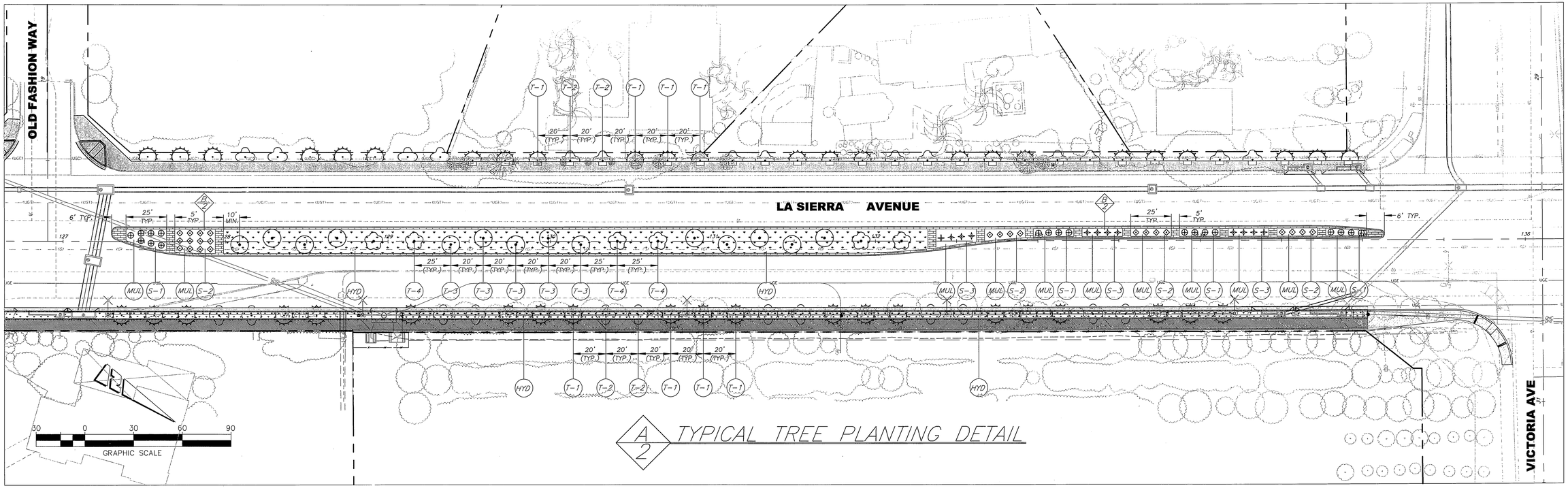

A/2 TYPICAL TREE PLANTING DETAIL

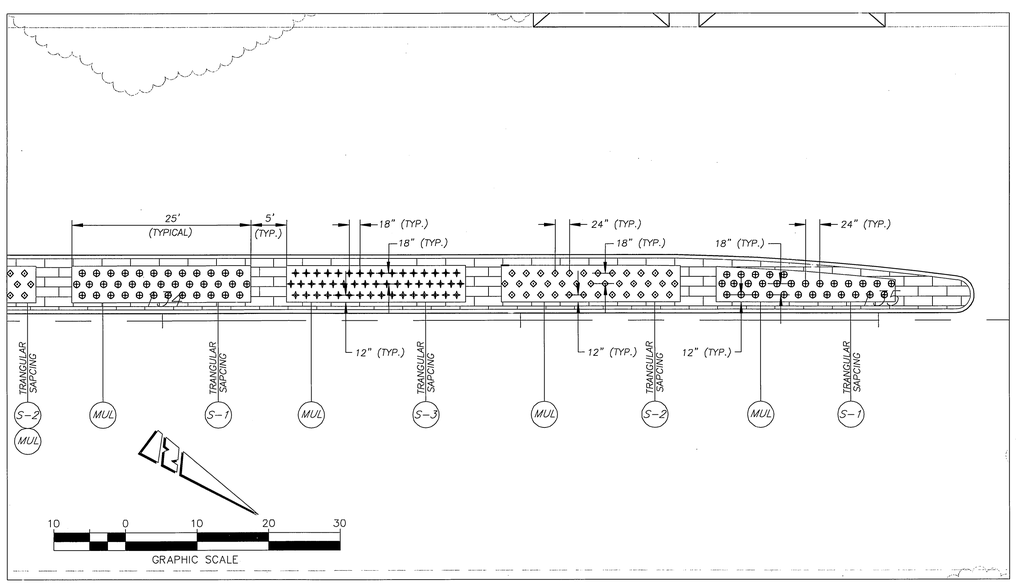

B/2 TYPICAL SHRUB PLANTING DETAIL

PLANTING LEGEND

ITEM	SYMBOL	LEGEND	BOTANICAL NAME	COMMON NAME	SIZE	REMARKS	QUANTITY
TREE T-1		T-1	PYRUS CALLERYANA	ORNAMENTAL PEAR	24" BOX	SPACED @ 20' O.C. (25' AT COMMERCIAL AREAS: FROM STA. 170+80 LT. TO 176+40 LT.)	153
TREE T-2		T-2	TRISTANIA LAURINA	WATER GUM	24" BOX	SPACED @ 20' O.C. (25' AT COMMERCIAL AREAS: FROM STA. 170+80 LT. TO 176+40 LT.)	102
TREE T-3		T-3	CERCIS CANADENSIS	EASTERN REDBUD	24" BOX	SPACED @ 20' O.C.	74
TREE T-4		T-4	TABEBUIA IMPETIGINOSA	PURPLE TABEBUIA	24" BOX	SPACED @ 25' O.C.	30
SHRUB S-1		S-1	EUONYMOUS AURED MARLINATA	GOLDEN EUONYMOUS	5 GAL.	SPACED @ 24" O.C.	945
SHRUB S-2		S-2	NANOINA GULF STREAM	HEAVENLY BAMBOO	5 GAL.	SPACED @ 24" O.C.	915
SHRUB S-3		S-3	AEONIUM	ZWARTKOP	5 GAL.	SPACED @ 18" O.C.	740
GRASS		HYD		HYDROSEEDED TURF		SEE SPECIFICATION 02480	40,500 SF
MULCH MATERIAL		MUL		SHREDDED MULCH		2" THICK	11,000 SF
HEDGE		HDG	BUXUS MICROPHYLLA 'WINTER GEM'	WINTER GEM BOXWOOD	5 GAL.	SPACED @ 36" O.C.	300

IRRIGATION LEGEND

SYMBOL	DESCRIPTION	*DETAIL	REMARKS	SYMBOL	DESCRIPTION	*DETAIL	REMARKS	MIN. OP. PRESSURE	PRECIP. RATE
	CONTROLLER STATION G.P.M. DEMAND SIZE PER PLAN				FEBCO 825Y R.P. BACKFLOW PREVENTER W/WILKENS 500 YBSR PRESSURE REGULATOR/STRAINER	2			
					MASTER CONTROL VALVE, GRISWOLD SERIES 2000 1-1/2" DIA.	4			
	GRISWOLD 2000 REMOTE CONTROL VALVE	4			TORO 570 12" HP-MPR-15H SPRAY SPRINKLER 15'R 1.65 GPM	5			
	RAINBIRD 44LRC 1" QUICK COUPLER	3			TORO 570 12" HP-MPR-12H SPRAY SPRINKLER 12'R 1.09 GPM	5			
A	RAINBIRD ESP-MC CONTROLLER (NO. OF STATIONS PER PLAN)	6			TORO 570 12" HP-MPR-8H-PC SPRAY SPRINKLER 8'R 0.50 GPM	5			
	NIBCO T-580 BALL VALVE	1			TORO 570 12" HP-MPR-8Q SPRAY SPRINKLER 8'R X .24 GPM	5			
	PRESSURE MAINLINE PVC SCH 40 -				TORO 570 12" HP-MPR-4CST-PC SPRAY SPRINKLER 4' x 30' 0.75 GPM	5			
	INTERMITTENT PRESSURE LATERAL LINE PVC CL200				TORO 570 12" HP-MPR-4EST-PC SPRAY SPRINKLER 4' x 15' 0.38 GPM	5			
	PVC PIPE & WIRE SLEEVE SIZE PER PLAN OR 2X PIPE DIA.				TORO 570 12" HP-MPR-8T SPRAY SPRINKLER 8'R 0.30 GPM	5			
NOT SHOWN	UF DIRECT BURIAL CONTROL WIRE, SOLID COPPER								

ENGINEER IN RESPONSIBLE CHARGE
MICHAEL KATUSIAN
R.C.E. No. 36686 expires 6/30/06
DATE 8/31/05

REGISTERED PROFESSIONAL ENGINEER MICHAEL KATUSIAN No. 36686 Exp. 6-30-06 CIVIL STATE OF CALIFORNIA

MARK	REVISIONS	APPR.	DATE

DESIGNED BY EL. DRAWN BY EL. CHECKED BY MK.

APPROVED BY	BY	DATE
PRINCIPAL ENGINEER		9/1/05
CONSTRUCTION ADMIN.		9/1/05
SURVEYOR	—	—
STREET SERVICES		9/1/05
TRAFFIC ENGINEER	—	—
PARK & REC. DEP.		9/1/05

CITY OF RIVERSIDE, CALIFORNIA
PUBLIC WORKS DEPARTMENT
APPROVED BY
CITY ENGINEER
DATE 9/1/05

LA SIERRA AVENUE LANDSCAPE IMPROVEMENTS
(FROM CLEVELAND AVENUE TO INDIANA AVENUE)
TYPICAL PLANTING LAYOUTS, PLANTING AND IRRIGATION LEGENDS
HORIZ. SCALE: N/A VERT. SCALE: N/A

ACCOUNT. NO. 9576127152-440223
WORK ORDER. NO. 0602072
R-3739L
SHEET L2 OF 8
FILE NO.

INDEXED 6-12-06

G:\COMMON\MIKE'S GROUP\PROJECTS\STREETS\LA SIERRA-INDIANA TO CLEVELAND\DRAWINGS\PLANS\IMPROVEMENTS\LANDSCAPE\R3739L-02.DWG 08/31/05 3:36 pm

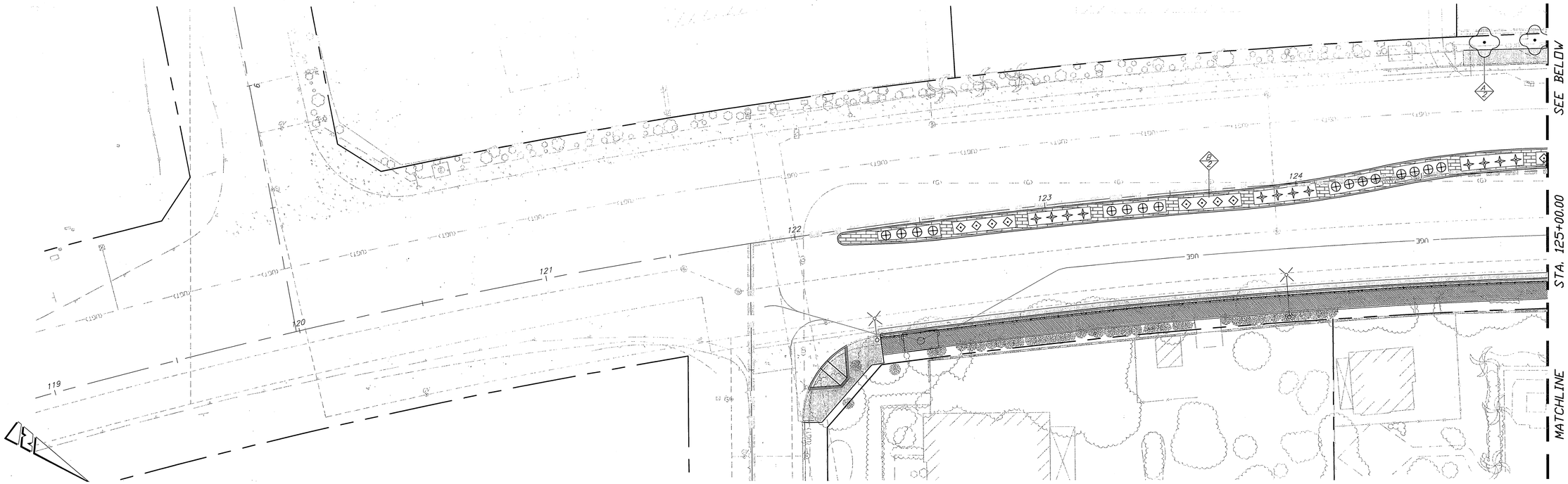

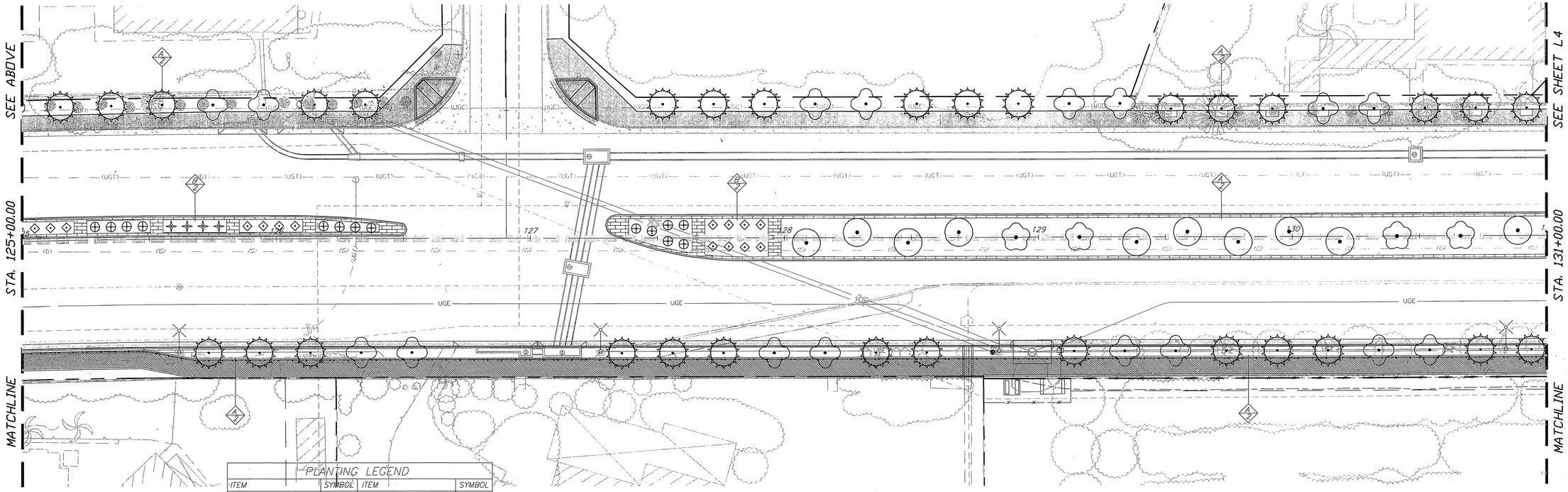

PLANTING LEGEND			
ITEM	SYMBOL	ITEM	SYMBOL
PYRUS CALLERYANA T-1		EUONYMOUS AURED MARLINATA S-1	
TRISTANIA LAURINA T-2		NANOINA GULF STREAM S-2	
CERCIS CANADENSIS T-3		AEONIUM S-3	
TABEBUIA IMPETIGINOSA T-4			

20 0 20 40 60
GRAPHIC SCALE

ENGINEER IN RESPONSIBLE CHARGE
Michael Katusian
MICHAEL KATUSIAN
R.C.E. No. 36685 expires 6/30/06
DATE 9/1/05

REGISTERED PROFESSIONAL ENGINEER
MICHAEL KATUSIAN
No. 36685
Exp. 6-30-06
CIVIL
STATE OF CALIFORNIA

MARK	REVISIONS	APPR.	DATE

DESIGNED BY F.L. DRAWN BY F.L. CHECKED BY M.K.

APPROVED BY	BY	DATE
PRINCIPAL ENGINEER		9/1/05
CONSTRUCTION ADMIN.		9/1/05
SURVEYOR	—	—
STREET SERVICES		9/1/05
TRAFFIC ENGINEER	—	—
PARK & REC. DEP.		9/1/05

CITY OF RIVERSIDE, CALIFORNIA
PUBLIC WORKS DEPARTMENT
APPROVED BY
CITY ENGINEER
DATE 9/2/05

LA SIERRA AVENUE
LANDSCAPE IMPROVEMENTS
(FROM CLEVELAND AVENUE TO INDIANA AVENUE)
STA 122+00 TO STA 131+00
HORIZ. SCALE: 1"=20' VERT. SCALE: N/A

ACCOUNT. NO. 9576127152-440223
WORK ORDER. NO. 0602072
R-3739L
SHEET L3 OF 8
FILE NO.

INDEXED 6-12-06

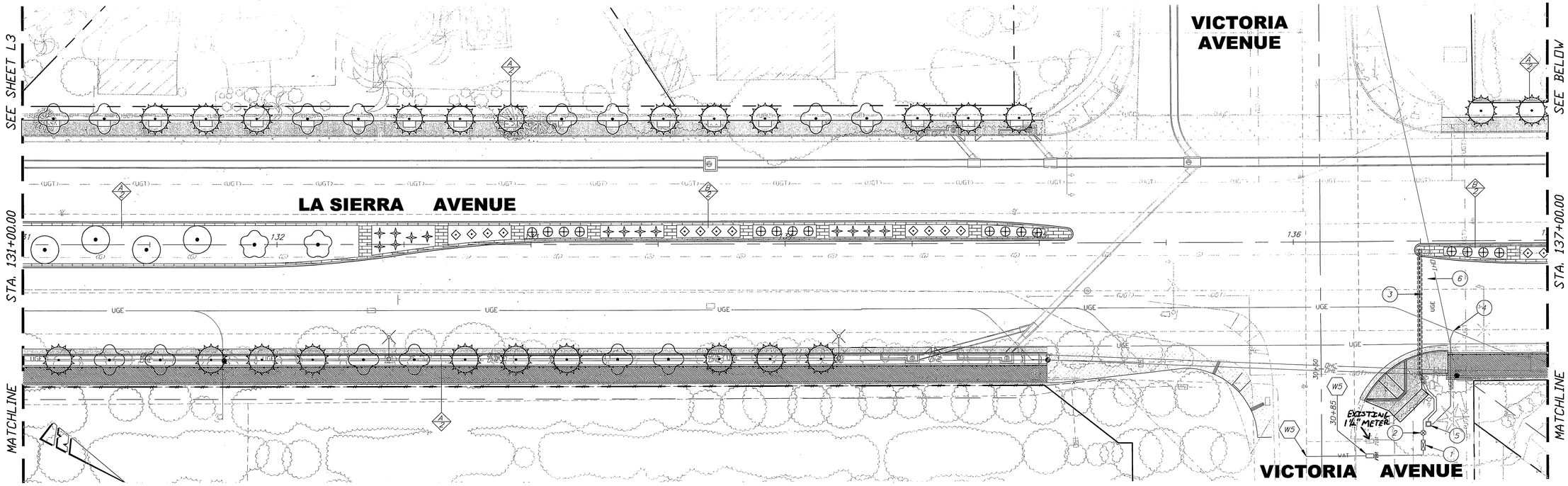

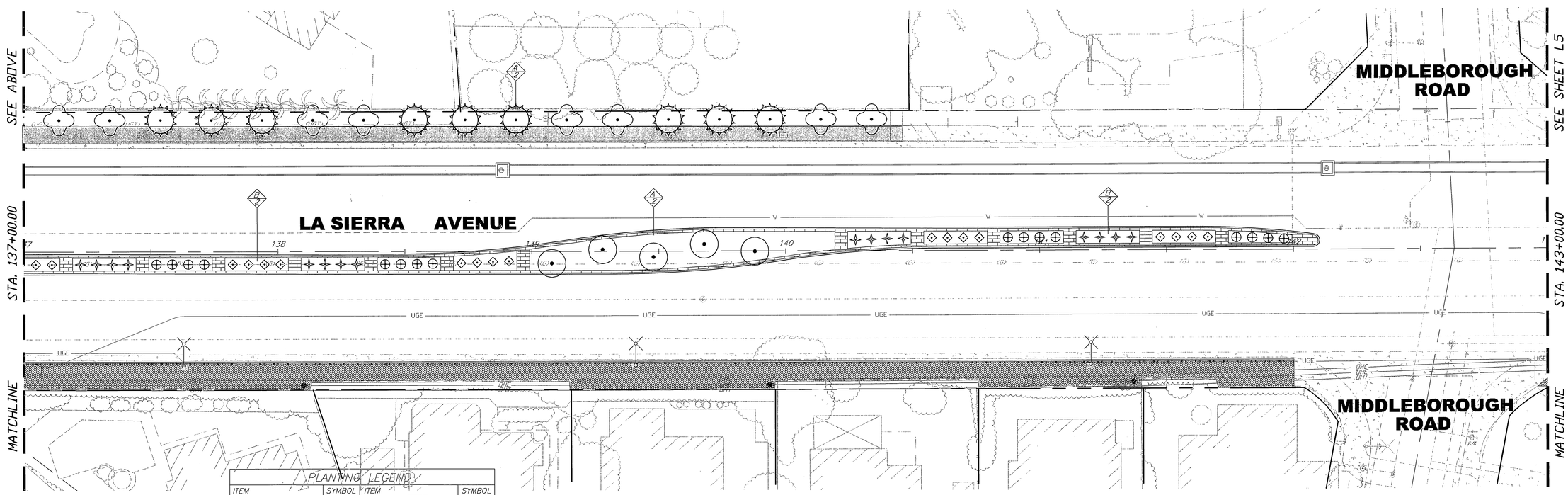

GRAPHIC SCALE 20 0 20 40 60

PLANTING LEGEND

ITEM	SYMBOL	ITEM	SYMBOL
PYRUS CALLERYANA T-1		EUONYMOUS AURED MARLINATA S-1	
TRISTANIA LAURINA T-2		NANOINA GULF STREAM S-2	
CERCIS CANADENSIS T-3		AEONIUM S-3	
TABEBUIA IMPETIGINOSA T-4			

ENGINEER IN RESPONSIBLE CHARGE
MICHAEL KATUSIAN
R.C.E. No. 35686 expires 6/30/06
DATE 8/31/05

REGISTERED PROFESSIONAL ENGINEER MICHAEL KATUSIAN No. 35686 Exp. 6-30-06 CIVIL STATE OF CALIFORNIA

MARK	REVISIONS	APPR.	DATE

DESIGNED BY F.L. DRAWN BY F.L. CHECKED BY M.K.

APPROVED BY	BY	DATE
PRINCIPAL ENGINEER		9/1/05
CONSTRUCTION ADMIN.		9/1/05
SURVEYOR		
STREET SERVICES		9/1/05
TRAFFIC ENGINEER		
PARK & REC. DEP.		9/1/05

CITY OF RIVERSIDE, CALIFORNIA
PUBLIC WORKS DEPARTMENT
APPROVED BY
CITY ENGINEER
DATE 9/2/05

LA SIERRA AVENUE LANDSCAPE IMPROVEMENTS

(FROM CLEVELAND AVENUE TO INDIANA AVENUE)

STA 131+00 TO STA 143+00

HORIZ. SCALE: 1"=20' VERT. SCALE: NA

ACCOUNT. NO. 9576127152-440223
WORK ORDER. NO. 0602072

R-3739L

SHEET L4 OF 8

FILE NO.

G:\COMMONWIKE'S GROUP\PROJECTS\STREETS\LA SIERRA-INDIANA TO CLEVELAND\DRAWINGS\PLANS\IMPROVEMENTS\LANDSCAPE\R3739L-04.DWG 08/31/05 3:36 pm

INDEXED 6-12-06 LH

PLANTING LEGEND			
TREE ITEM	SYMBOL	SHRUB ITEM	SYMBOL
PYRUS CALLERYANA T-1		EUONYMOUS AURED MARLINATA S-1	
TRISTANIA LAURINA T-2		NANOINA GULF STREAM S-2	
CERCIS CANADENSIS T-3		AEONIUM S-3	
TABEBUIA IMPETIGINOSA T-4		HEDGE	

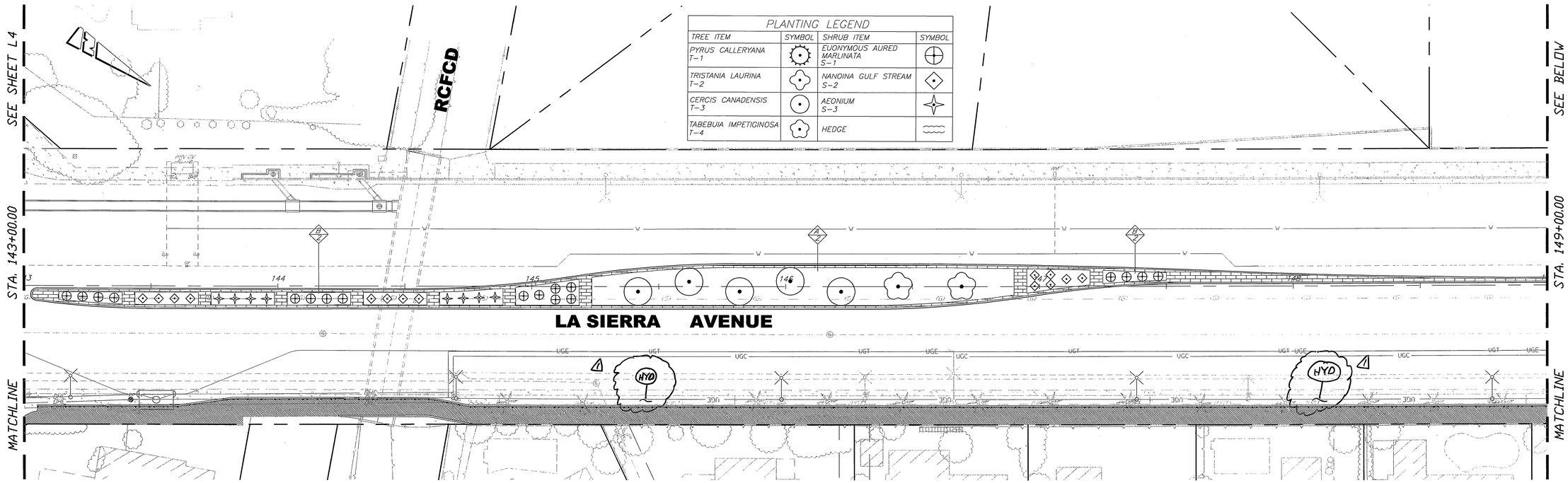

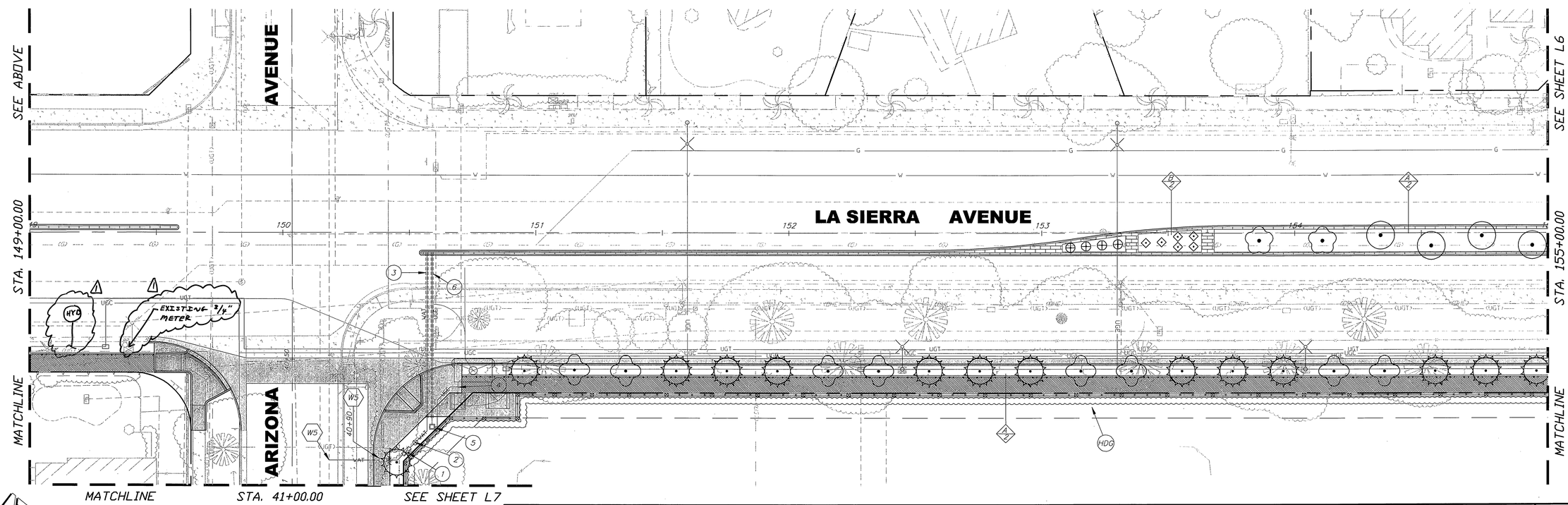

20 0 20 40 60
GRAPHIC SCALE

ENGINEER IN RESPONSIBLE CHARGE
MICHAEL KATUSIAN
R.C.E. No. 35686 expires 6/30/06
DATE 8/31/05

REGISTERED PROFESSIONAL ENGINEER
MICHAEL KATUSIAN
No. 35686
Exp. 6-30-06
CIVIL
STATE OF CALIFORNIA

MARK	REVISIONS	APPD.	DATE
4	IDENTIFIED LOCATION OF EXIST. METER	MK	9/1/05
3	ADDED HYDROSEED GRASS ON ELY PKWY	MK	9/1/05

DESIGNED BY F.L. DRAWN BY F.L. CHECKED BY M.K.

APPROVED BY	BY	DATE
PRINCIPAL ENGINEER		9/1/05
CONSTRUCTION ADMIN.		9/1/05
SURVEYOR	—	—
STREET SERVICES	BB	9/1/05
TRAFFIC ENGINEER	—	—
PARK & REC. DEP.		9/1/05

CITY OF RIVERSIDE, CALIFORNIA
PUBLIC WORKS DEPARTMENT
APPROVED BY
CITY ENGINEER
DATE 9/2/05

LA SIERRA AVENUE LANDSCAPE IMPROVEMENTS

(FROM CLEVELAND AVENUE TO INDIANA AVENUE)

STA 143+00 TO STA 155+00

HORIZ. SCALE: 1"=20' VERT. SCALE: NA

ACCOUNT. NO. 9576127152-440223
WORK ORDER. NO. 0602072

R-3739L

SHEET 15 OF 8

FILE NO.

G:\COMMON\MIKE'S GROUP\PROJECTS\STREETS\LA SIERRA-INDIANA TO CLEVELAND\DRAWINGS\PLANS\IMPROVEMENTS\LANDSCAPE\R3739L-05.DWG 08/31/05 3:36 pm

INDEXED 6-12-06 LH

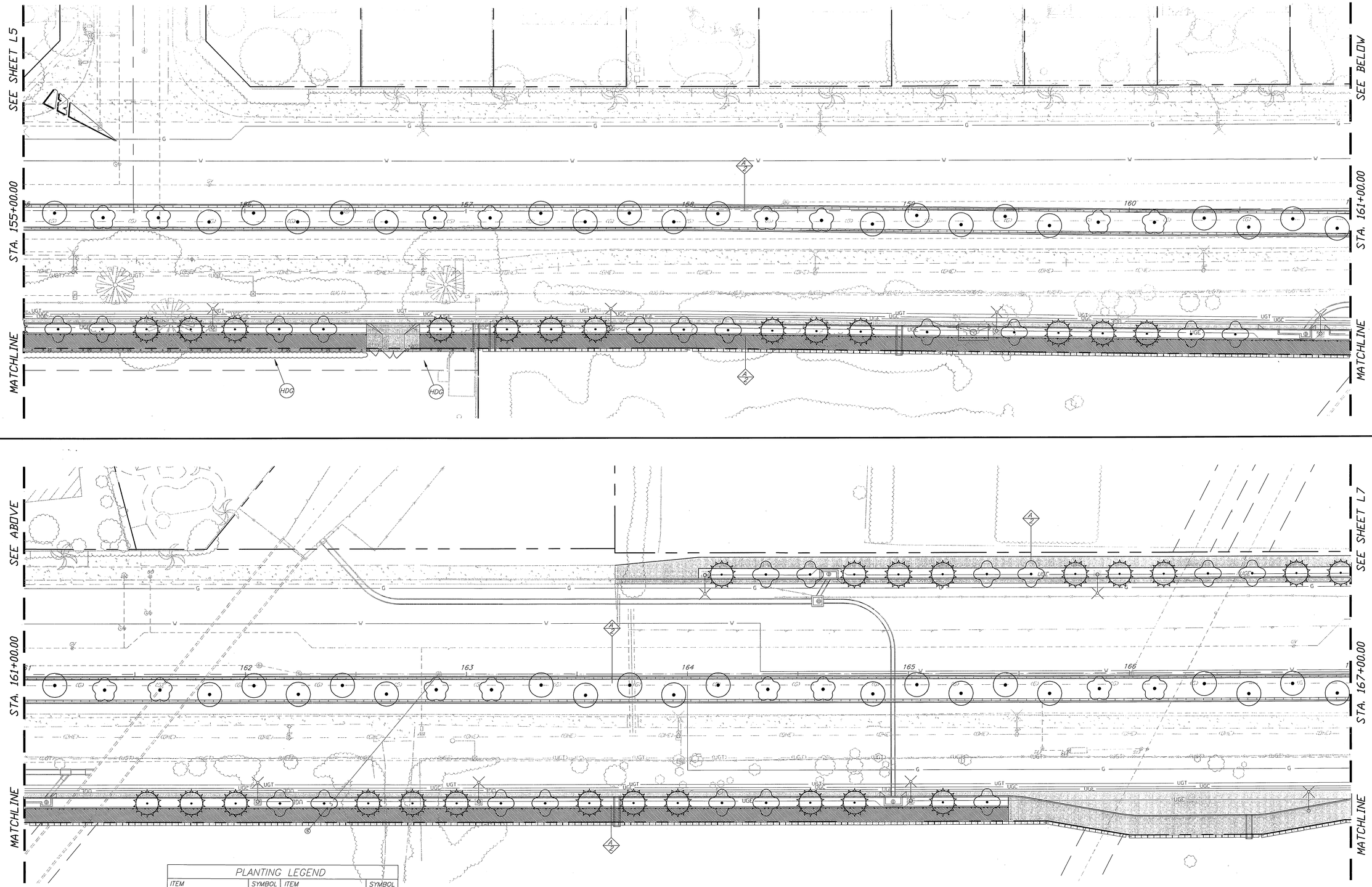

PLANTING LEGEND			
ITEM	SYMBOL	ITEM	SYMBOL
PYRUS CALLERYANA T-1		EUONYMOUS AURED MARLINATA S-1	
TRISTANIA LAURINA T-2		NANOINA GULF STREAM S-2	
CERCIS CANADENSIS T-3		AEONIUM S-3	
TABEBUIA IMPETIGINOSA T-4		HEDGE	

20 0 20 40 60
GRAPHIC SCALE

ENGINEER IN RESPONSIBLE CHARGE
MICHAEL KATUSIAN
R.C.E. No. 36686 Expires 6/30/06
DATE 8/31/05

REGISTERED PROFESSIONAL ENGINEER MICHAEL KATUSIAN No. 36686 Exp. 6-30-06 CIVIL STATE OF CALIFORNIA

MARK	REVISIONS	APPR.	DATE

DESIGNED BY EL DRAWN BY EL CHECKED BY MK

APPROVED BY	BY	DATE
PRINCIPAL ENGINEER		9/1/05
CONSTRUCTION ADMIN.		9/1/05
SURVEYOR	—	—
STREET SERVICES		9/1/05
TRAFFIC ENGINEER	—	—
PARK & REC. DEP.		9/1/05

CITY OF RIVERSIDE, CALIFORNIA
PUBLIC WORKS DEPARTMENT
APPROVED BY
CITY ENGINEER
DATE 9/2/05

LA SIERRA AVENUE
LANDSCAPE IMPROVEMENTS
(FROM CLEVELAND AVENUE TO INDIANA AVENUE)
STA 155+00 TO STA 167+00
HORIZ. SCALE: 1"=20' VERT. SCALE: NA

ACCOUNT. NO. 9576127152-440223
WORK ORDER. NO. 0602072
R-3739L
SHEET L6 OF 8
FILE NO.

G:\COMMON\MIKE'S GROUP\PROJECTS\STREETS\LA SIERRA-INDIANA TO CLEVELAND\DRAWINGS\PLANS\IMPROVEMENTS\LANDSCAPE\R3739L-06.DWG 08/31/05 3:35 pm

INDEXED 6-12-06 LH

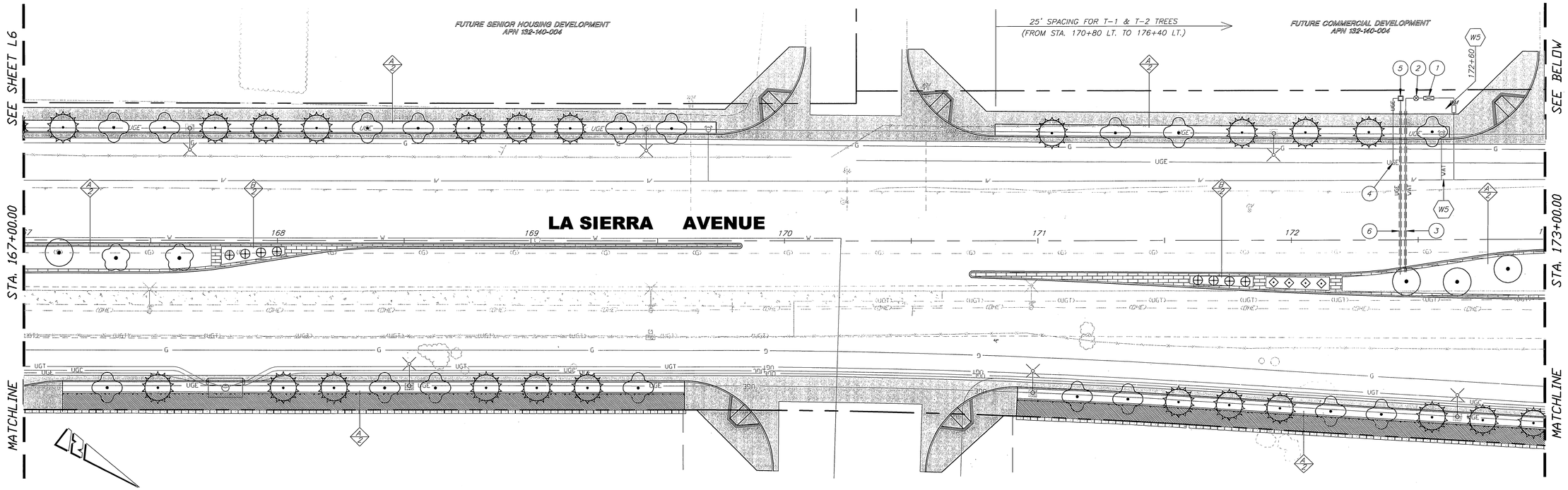

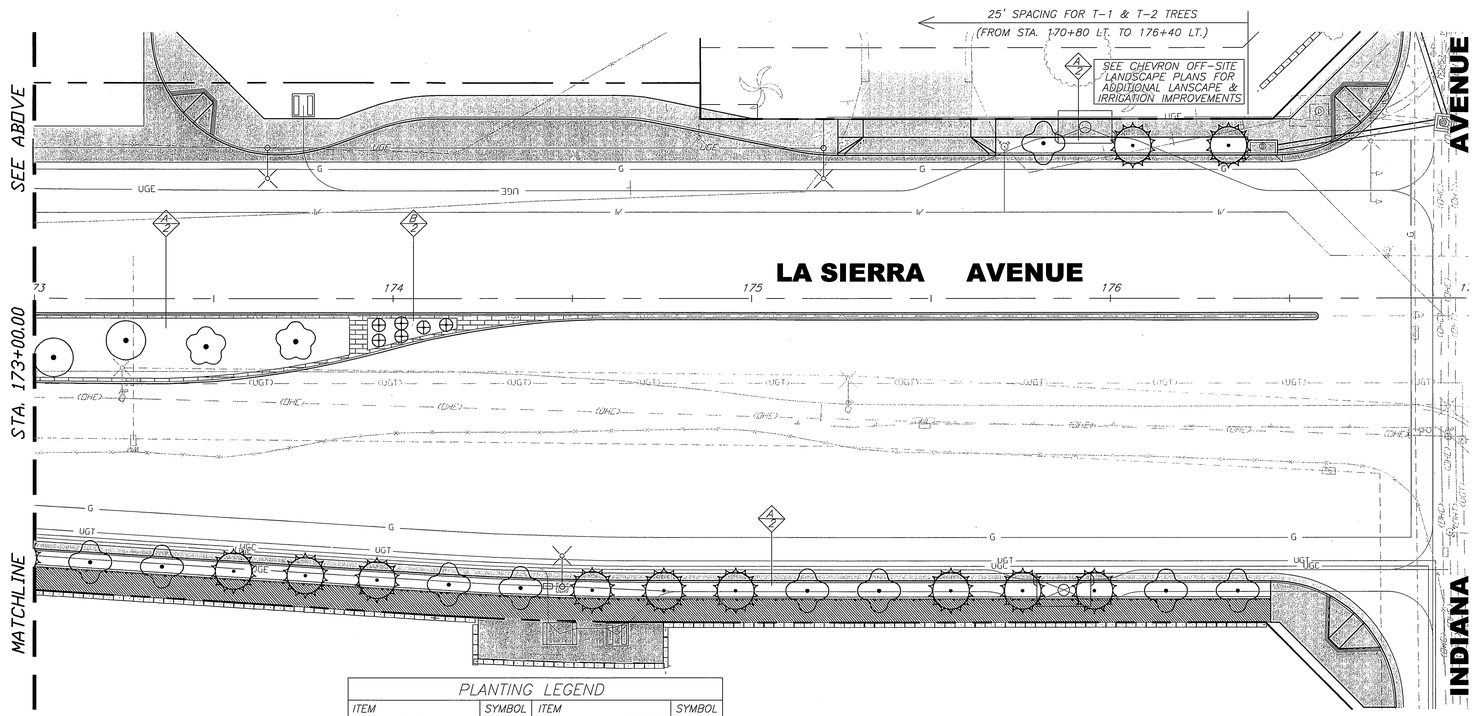

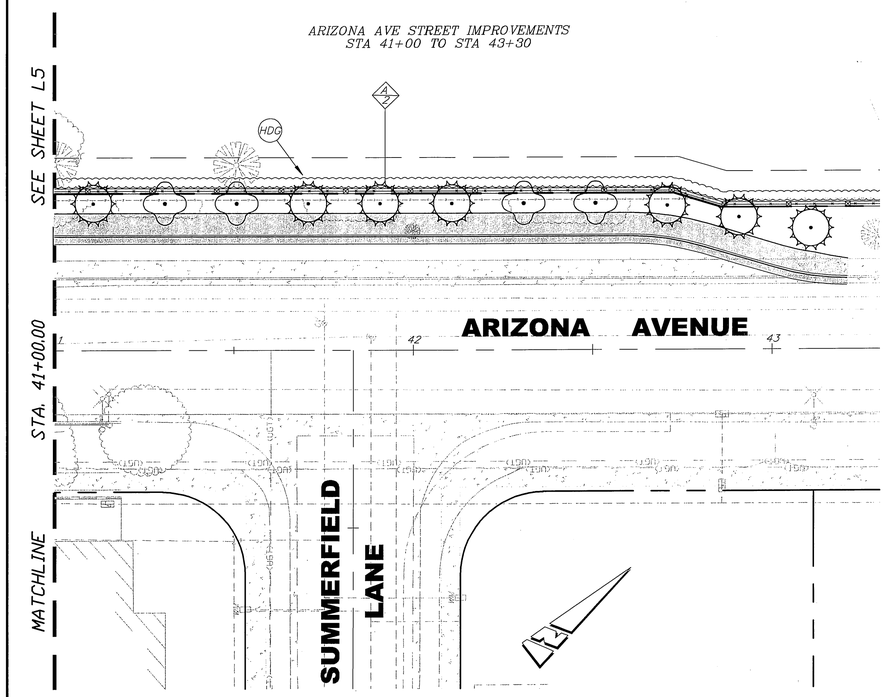

PLANTING LEGEND

ITEM	SYMBOL	ITEM	SYMBOL
PYRUS CALLERYANA T-1		EUONYMOUS AURED MARLINATA S-1	
TRISTANIA LAURINA T-2		NANOINA GULF STREAM S-2	
CERCIS CANADENSIS T-3		AEONIUM S-3	
TABEBUIA IMPETIGINOSA T-4		HEDGE	

20 0 20 40 60
GRAPHIC SCALE

ENGINEER IN RESPONSIBLE CHARGE
MICHAEL KATUSIAN
R.C.E. No. 36686 expires 6/30/06
DATE 9/31/05

REGISTERED PROFESSIONAL ENGINEER MICHAEL KATUSIAN No. 36686 Exp. 6-30-06 CIVIL STATE OF CALIFORNIA

MARK	REVISIONS	APPR.	DATE

DESIGNED BY EL DRAWN BY EL CHECKED BY MK

APPROVED BY	BY	DATE
PRINCIPAL ENGINEER	DH	9/1/05
CONSTRUCTION ADMIN.		9/1/05
SURVEYOR	—	—
STREET SERVICES		9/1/05
TRAFFIC ENGINEER	—	—
PARK & REC. DEP.		9/1/05

CITY OF RIVERSIDE, CALIFORNIA
PUBLIC WORKS DEPARTMENT
APPROVED BY
CITY ENGINEER
DATE 9/2/05

LA SIERRA AVENUE
LANDSCAPE IMPROVEMENTS
(FROM CLEVELAND AVENUE TO INDIANA AVENUE)
LA SIERRA AVE : STA 167+00 – 177+00
ARIZONA AVE : STA 42+00 – 43+30
HORIZ. SCALE: 1"=20' VERT. SCALE: NA

ACCOUNT. NO. 9576127152-440223
WORK ORDER. NO. 0602072
R-3739L
SHEET L7 OF 8
FILE NO.

INDEXED 6-12-06 LH

G:\COMMON\MIKE'S GROUP\PROJECTS\STREETS\LA SIERRA-INDIANA TO CLEVELAND\DRAWINGS\PLANS\IMPROVEMENTS\LANDSCAPE\R3739L-07.DWG 08/31/05 3:35 pm

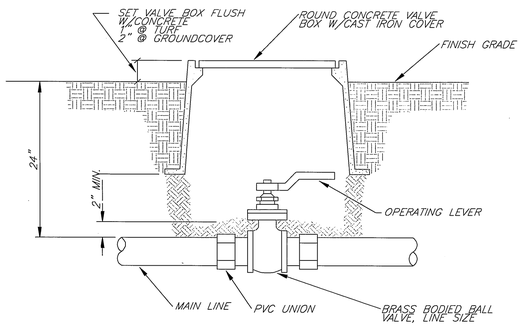

1 TYPICAL BALL VALVE ASSEMBLY

NO SCALE

NOTES

1) EACH VALVE SHALL HAVE ITS OWN TEE OR ELL CONNECTION TO THE MAINLINE. NO MANIFOLD CONNECTIONS

2) PROVIDE MINIMUM 3' CLEAR DISTANCE BETWEEN VALVES

3) INSTALL VALVE BOX IN A MANNER THAT BOX DOES NOT REST ON ANY IRRIGATION LINE

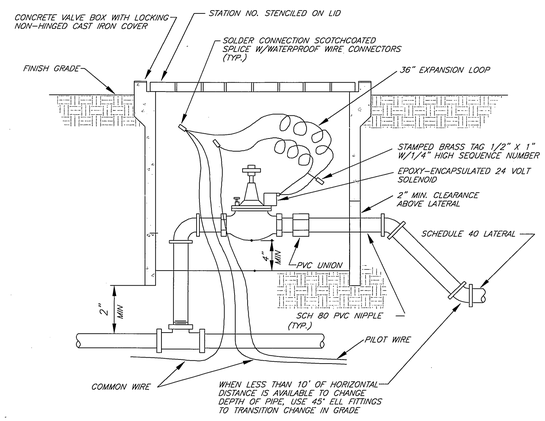

4 TYPICAL AUTOMATIC VALVE

NO SCALE

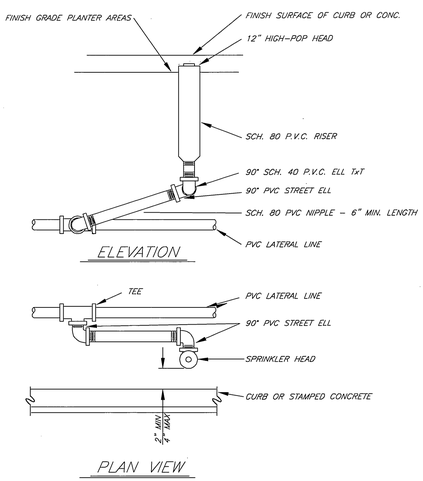

5 TYPICAL SPRAY HEAD ASSEMBLY

NO SCALE

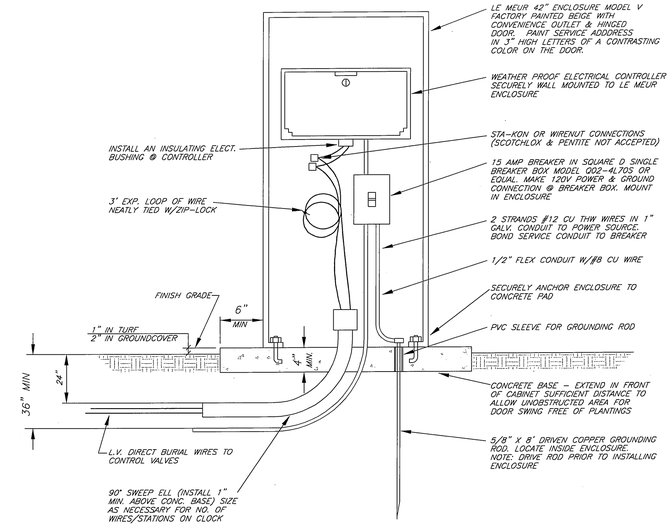

6 TYPICAL CONTROLLER

NO SCALE

NOTES

1) INSTALL BACKFLOW DEVICE SQUARE WITH HARDSCAPE ELEMENT AS APPROVED BY THE PARK PROJECTS INSPECTOR IN THE FIELD

2) MODIFY HANDWHEELS AS DIRECTED OR REMOVE & TURN OVER TO PARKS PROJECTS INSPECTOR AT FINAL INSPECTION

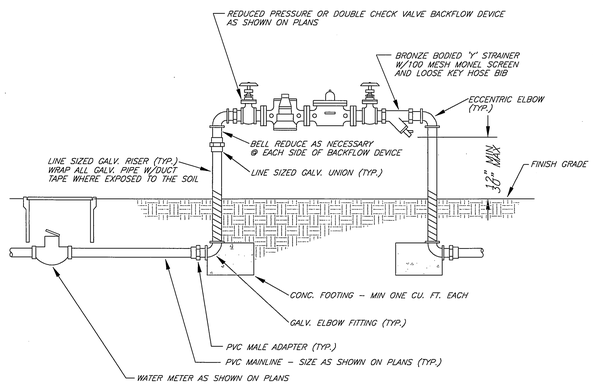

2 TYPICAL BACKFLOW DEVICE

NO SCALE

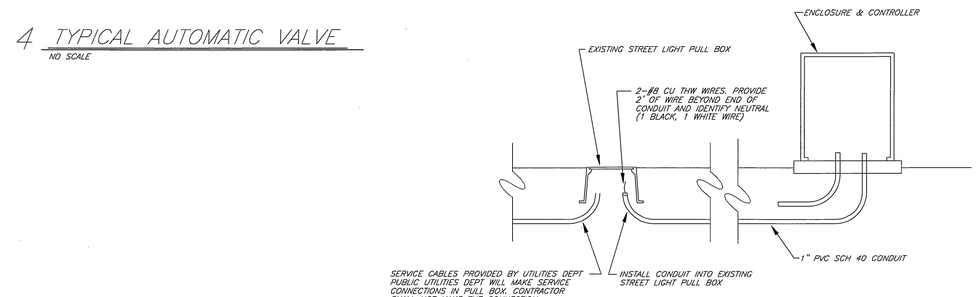

8 TYPICAL UNDERGROUND ELECTRICAL CONNECTION

NO SCALE

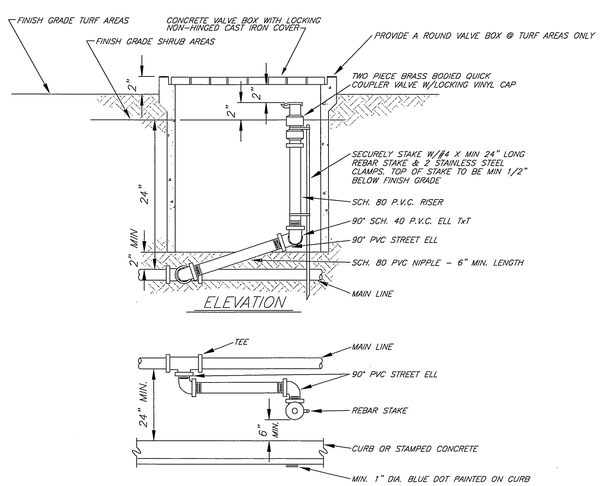

3 TYPICAL QUICK COUPLER VALVE

NO SCALE

(NOTE: PROVIDE A ROUND CONCRETE VALVE BOX IN TURF AREAS)

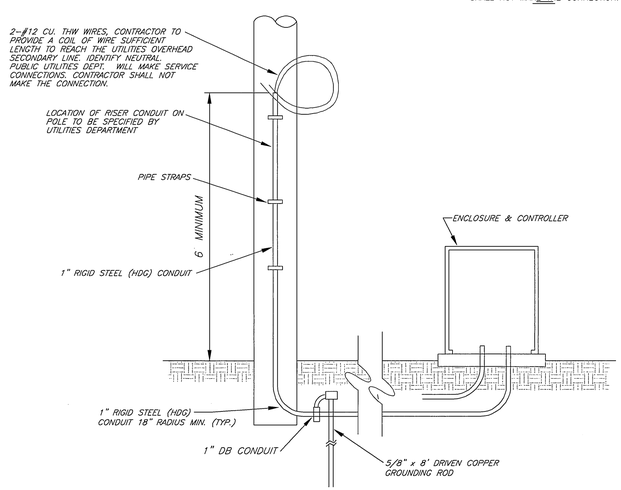

7 TYPICAL OVERHEAD ELECTRIC CONNECTION

NO SCALE

POINT OF CONNECTION ELECTRIC NOTES

1. ALL FACILITIES INSTALLED BY THE CONTRACTOR SHALL BE INSPECTED AND APPROVED BY THE UTILITIES DEPT CONSTRUCTION INSPECTOR (PH. 782-5429). ANY CHANGES SHALL BE APPROVED BY THE UTILITIES DEPT. PRIOR TO EXECUTION. THE CONTRACTOR SHALL BE RESPONSIBLE FOR COORDINATING ALL PHASES OF CONSTRUCTION WITH THE UTILITIES DEPT. CONSTRUCTION INSPECTOR AND CONSTRUCTION SUPERINTENDANT (PH. 351-6173.)
2. ALL IRRIGATION CONTROLLER FEED POINTS TO BE CONNECTED BY PUBLIC UTILITIES DEPT. AND ENERGIZED WHEN CLEARED BY UTILITIES DEPT. INSPECTOR.
3. ALL WIRE TO BE #12 CU. THW.
4. CONDUIT AND FITTINGS TO BE IN CONFORMANCE WITH UGS-100. BACKFILL TO BE TYPE AND COMPACTED AS SPECIFIED IN UGS-100.1.
5. PROVIDE RELEASE LETTER AUTHORIZING ENERGIZATION, SIGNED BY RESPONSIBLE PERSON IN CHARGE. OBTAIN FORM LETTER FROM UTILITY INSPECTOR.

P.O.C. DATA WATER SERVICE
METER SIZE: X/X"
SERVICE ADDRESS: XXXXXXXXXXXXXXXXX
ELEVATION: XXX.XX
PRESSURE ZONE: GRAVITY (XXX ZONE)
STATIC PRESSURE: XX P.S.I.
SERVED AREA: HIGHEST ELEV. XXX.XX
LOWEST ELEV. XXX.XX
MAX. GPM DEMAND: XX.XX G.P.M.
METER NO.:

WATER SERVICE SUMMARY TABLE

IRRIGATION SYSTEM DESIGN CRITERIA

WATER SERVICE:
CONTRACTOR SHALL CONTACT THE CITY OF RIVERSIDE PUBLIC UTILITIES DEPT AND OBTAIN AND PAY FOR NEW WATER METER(S) AS NECESSARY TO ADEQUATELY SERVE THE IRRIGATION SYSTEM AS DESIGNED. METER AND BACKFLOW DEVICES SHALL BE LOCATED IN THE PARKWAY A MINIMUM OF 100' FROM ANY INTERSECTION OR MAJOR DRIVEWAY (CURB RETURN TYPE DRIVEWAY OPENING). CONTRACTOR SHALL BE RESPONSIBLE FOR ALL WATER COSTS THROUGHOUT THE MAINTENANCE AND PLANT ESTABLISHMENT PERIOD.

ELECTRIC SERVICE:
CONTRACTOR SHALL CONTACT THE CITY OF RIVERSIDE, PUBLIC UTILITIES, ELECTRIC DIVISION AND SHALL OBTAIN AND PAY FOR NEW "NON-METERED" ELECTRIC SERVICE AS NECESSARY TO SERVE THE NEW IRRIGATION CONTROLLER. SERVICE SHALL BE UNDERGROUND TYPE AND SHALL BE COORDINATED WITH THE CONTROLLER LOCATION.

IRRIG. CONTROLLER:
THE IRRIGATION CONTROLLER SHALL BE SIZED TO ACCOMMODATE THE NUMBER OF VALVES REQUIRED TO SERVE THE ENTIRE PROJECT AND TO PROVIDE A MINIMUM OF TWO SPARE STATIONS. THE CONTROLLER SHALL BE THE TYPE AND MANUFACTURER AS INDICATED ON THE PLANS. CONTROLLER SHALL BE WEATHERPROOF, WALL-MOUNT TYPE, INSTALLED WITHIN A LOCKING METAL ENCLOSURE, AND SHALL BE LOCATED MID-BLOCK IN THE PARKWAY A MINIMUM OF 100' FROM ANY INTERSECTION OR MAJOR DRIVEWAY (CURB RETURN TYPE DRIVEWAY OPENING).

MAINLINE & SLEEVES:
ALL LINES BENEATH THE STREET (I.E. NOT WITHIN THE LANDSCAPE MEDIAN PLANTING AREAS) SHALL BE CONSTANT PRESSURE LINES INSTALLED IN SLEEVES. SLEEVES SHALL BE INSTALLED IN STRAIGHT LINES (NO TURNS OR BENDS, EITHER VERTICAL OR HORIZONTAL). PROVIDE A LINE SIZE BALL VALVE WITHIN A VALVE BOX IMMEDIATELY UPSTREAM OF LINE ENTERING THE STREET AREA. SIZE MAINLINE TO KEEP WATER VELOCITY BELOW 5 FEET PER SECOND.

CONTROL WIRE:
ALL CONTROL WIRE LOCATED UNDER PAVEMENT OF ANY TYPE SHALL BE SEPARATELY SLEEVED. PROVIDE A MINIMUM OF TWO SPARE CONTROL WIRE AT EACH END OF THE PROJECT, STUBBED OUT IN A VALVE BOX.

LATERAL LINES:
SIZE ALL LATERAL LINES AS NECESSARY TO KEEP WATER VELOCITY BELOW 5 FEET PER SECOND. DESIGN LATERAL LINE PLACEMENTS AT EDGES OF PLANTING SPACES TO AVOID CONFLICT WITH PLANTINGS.

CONTROL VALVES:
ALL IRRIGATION CONTROL VALVES SHALL BE SIZED TO PROVIDE THE WATER VOLUME REQUIRED WITH PRESSURE LOSS THROUGH THE VALVE KEPT AT BELOW A MAXIMUM OF 10% OF THE AVAILABLE STATIC PRESSURE. INSTALL VALVES IN "ANGLE" CONFIGURATION WHERE AVAILABLE. ALL STATIONS SHALL BE SIZED TO AVOID STATIONS WITH MORE THAN 20 GPM DEMAND OR 50 HEADS PER STATION WHICHEVER IS GREATER.

QUICK COUPLERS:
PROVIDE QUICK COUPLER VALVES AT A MINIMUM OF 50' FROM THE END OF THE LANDSCAPED AREA IN EACH ISLAND, AND SPACED AT A MAXIMUM OF 50' O.C. IN SHRUB AREAS AND 75' O.C. IN TURF AREAS.

HEADS:
ALL HEADS SHALL BE OF THE TYPE AND MANUFACTURER INDICATED ON THE PLANS AND SHALL BE INSTALLED WITH TRIPLE SWING JOINTS AS DETAILED.

IRRIGATION CONSTRUCTION NOTES:

1. ALL IRRIGATION LINES TO BE INSTALLED UNDER HARDSCAPE AREAS SHALL BE INSTALLED IN SCH. 40 P.V.C. SLEEVES, SLEEVE SIZE SHALL BE TWICE THE DIAMETER OF THE IRRIGATION PIPE SIZE (MIN.).
2. ALL IRRIGATION CONTROL WIRES TO BE INSTALLED UNDER HARDSCAPE AREAS SHALL BE INSTALLED IN 2" SCH. 40 P.V.C. SLEEVES (MIN.).
3. ALL IRRIGATION VALVES, BALL VALVES, QUICK COUPLERS AND BOXES ARE TO BE LOCATED IN PLANTING AREAS.

ENGINEER IN RESPONSIBLE CHARGE
MICHAEL KATUSIAN
R.C.E. No. 35686 expires 6/30/06
DATE 8/31/05

REGISTERED PROFESSIONAL ENGINEER MICHAEL KATUSIAN No. 35686 Exp. 6-30-06 CIVIL STATE OF CALIFORNIA

MARK	REVISIONS	APPR.	DATE

DESIGNED BY F.L. DRAWN BY F.L. CHECKED BY MK

APPROVED BY	BY	DATE
PRINCIPAL ENGINEER	DH	9/1/05
CONSTRUCTION ADMIN.	RC	9/1/05
SURVEYOR	—	—
STREET SERVICES	RB	9/1/05
TRAFFIC ENGINEER	—	—
PARK & REC. DEP.	RMP	9/1/05

CITY OF RIVERSIDE, CALIFORNIA
PUBLIC WORKS DEPARTMENT
APPROVED BY
CITY ENGINEER
DATE 9/2/05

LA SIERRA AVENUE LANDSCAPE IMPROVEMENTS
(FROM CLEVELAND AVENUE TO INDIANA AVENUE)
IRRIGATION NOTES AND DETAILS
HORIZ. SCALE: NA VERT. SCALE: NA

ACCOUNT. NO. 9576127152-440223
WORK ORDER. NO. 0602072
R-3739L
SHEET 8 OF 8
FILE NO.

G:\COMMON\MIKE'S GROUP\PROJECTS\STREETS\LA SIERRA-INDIANA TO CLEVELAND\DRAWINGS\PLANS\IMPROVEMENTS\LANDSCAPE\R3739L-08.DWG 08/31/05 3:34 pm

INDEXED 6-12-06