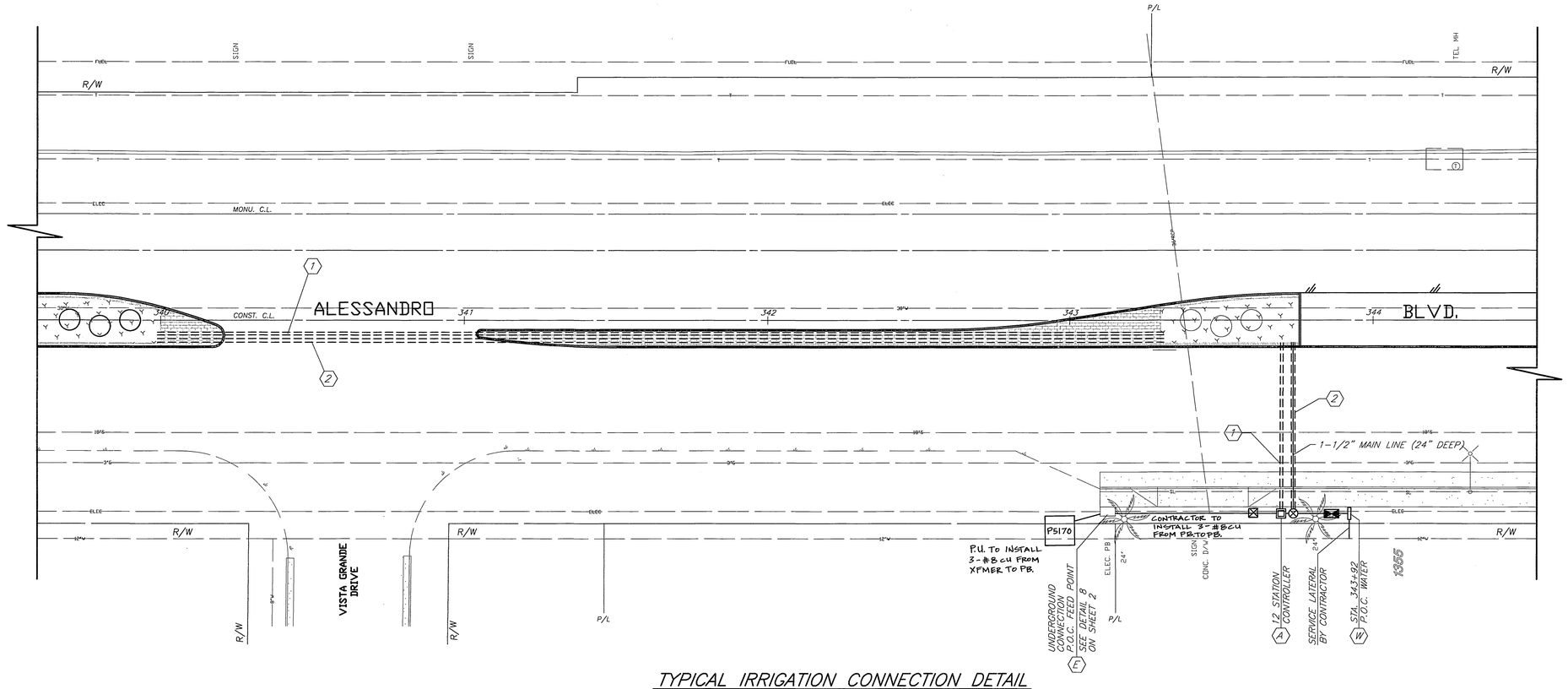

TYPICAL IRRIGATION CONNECTION DETAIL

(NO SCALE)

NOTE: CONNECT TO NEAREST EXISTING ELECTRIC SERVICE BOX.
SUBJECT TO REVIEW AND APPROVAL OF P.U.E. DIVISION.

IRRIGATION CONSTRUCTION NOTES:

1. ALL IRRIGATION LINES TO BE INSTALLED UNDER HARDSCAPE AREAS SHALL BE INSTALLED IN SCH. 40 P.V.C. SLEEVES, SLEEVE SIZE SHALL BE TWICE THE DIAMETER OF THE IRRIGATION PIPE SIZE (MIN.).
2. ALL IRRIGATION CONTROL WIRES TO BE INSTALLED UNDER HARDSCAPE AREAS SHALL BE INSTALLED IN 2" SCH. 40 P.V.C. SLEEVES (MIN.).
3. ALL IRRIGATION VALVES, BALL VALVES, QUICK COUPLERS AND BOXES ARE TO BE LOCATED IN PLANTING AREAS.

IRRIGATION CONSTRUCTION LEGEND:

(1) INSTALL 2" DIA. P.V.C. SCH. 40 SLEEVING, EXTENDING ' INTO PLANTING AREA OF MEDIAN WITH A MINIMUM OF 24" COVER, TERMINATING IN BROOKS #3 PULLBOX OR CITY APPROVED EQUAL W/TRAFFIC COVER AT EACH END, FOR IRRIGATION CONTROL WIRES.

(2) INSTALL 3" DIA. P.V.C. SCH. 40 SLEEVING, EXTENDING ' INTO PLANTING AREA OF MEDIAN, 24" COVER, FOR IRRIGATION SUPPLY LINE.

(A) SEE IRRIGATION SYSTEM DESIGN CRITERIA NOTE FOR AUTOMATIC IRRIGATION CONTROLLER ON SHEET 2.

(E) SEE IRRIGATION SYSTEM DESIGN CRITERIA NOTE FOR WATER SERVICE ON SHEET 2.

(W) SEE IRRIGATION SYSTEM DESIGN CRITERIA NOTE FORELECTRIC SERVICE ON SHEET 2.

P.O.C. DATA WATER SERVICE
METER SIZE: 1 INCH MINIMUM
SERVICE ADDRESS: 1355 ALESANDRO BOULEVARD
ELEVATION: 1608.5
PRESSURE ZONE: GRAVITY (1837 ZONE)
STATIC PRESSURE: 90 P.S.I.*
SERVED AREA: HIGHEST ELEV. 1622.7
LOWEST ELEV. 1598.8
**MAX. GPM DEMAND: XX.XX G.P.M.
**METER NO.:

* : WATER PRESSURE REDUCING VALVE
** : INFORMATION PROVIDED BY CONTRACTOR AS "AS-BUILT" INFORMATION.

P.O.C. DATA ELECTRICAL SERVICE
METER SIZE: NON-METERED SERVICE (20 AMP, 120/240V)
SERVICE ADDRESS: 1355 ALESANDRO BOULEVARD
VOLTAGE (SINGLE OR THREE PHASE): SINGLE PHASE

TYPICAL IRRIGATION LEGEND

SYMBOL	DESCRIPTION	*DETAIL	REMARKS	SYMBOL	DESCRIPTION	*DETAIL	REMARKS	MIN. OP. PRESSURE	PRECIP. RATE
	CONTROLLER STATION G.P.M. DEMAND SIZE PER PLAN				FEBCO 825Y R.P. BACKFLOW PREVENTER W/WILKENS 500 YBSR PRESSURE REGULATOR/STRAINER	2	SIZE PER PLAN		
	GRISWOLD 2000 REMOTE CONTROL VALVE				MASTER CONTROL VALVE, GRISWOLD SERIES 2000 1-1/2" DIA.				
	RAINBIRD 44LRC 1" QUICK COUPLER				TORO 570 12" HP-MPR-15H SPRAY SPRINKLER 15'R 1.65 GPM				
A	RAINBIRD ESP-MC CONTROLLER (NO. OF STATIONS PER PLAN)				TORO 570 12" HP-MPR-12H SPRAY SPRINKLER 12'R 1.09 GPM				
	NIBCO T-580 BALL VALVE				TORO 570 12" HP-MPR-8H-PC SPRAY SPRINKLER 8'R 0.50 GPM				
	PRESSURE MAINLINE PVC SCH 40 -				TORO 570 12" HP-MPR-8Q SPRAY SPRINKLER 8'R X 24 GPM				
	INTERMITTENT PRESSURE LATERAL LINE PVC CL200				TORO 570 12" HP-MPR-4CST-PC SPRAY SPRINKLER 4' x 30' 0.75 GPM				
	PVC PIPE & WIRE SLEEVE SIZE PER PLAN OR 2X PIPE DIA.				TORO 570 12" HP-MPR-4EST-PC SPRAY SPRINKLER 4' x 15' 0.38 GPM				
NOT SHOWN	UF DIRECT BURIAL CONTROL WIRE, SOLID COPPER				TORO 570 12" HP-MPR-8T SPRAY SPRINKLER 8'R 0.30 GPM				
					ST. LT. SERVICE BOX (10"x17"x12") PER ITEM #E-1 OF UDG-800 (CONCRETE ONLY) INSTALL PER UDG-220.				

(*SEE TYPICAL IRRIGATION CONNECTION DETAIL FOR DETAILS)

* AS-BUILT PER PLANS 7-08-05 4H

WESTERN MUNICIPAL WATER SERVICE DISTRICT
APPROVED BY _____
DATE 3-22-04

CITY OF RIVERSIDE, CALIFORNIA
ELECTRICAL DIVISION, PUBLIC UTILITIES DEPARTMENT
APPROVED BY _____
DATE 3/19/04

ENGINEER IN RESPONSIBLE CHARGE
MICHAEL KATUSIAN
R.C.E. No. 36686 expires 6/30/04
DATE 3/19/04

REGISTERED PROFESSIONAL ENGINEER MICHAEL KATUSIAN No. 36686 Exp. 6-30-04 CIVIL STATE OF CALIFORNIA

MARK	REVISIONS	APPR.	DATE

DESIGNED BY: FYL DRAWN BY: FYL CHECKED BY: MK

CITY OF RIVERSIDE, CALIFORNIA
PUBLIC WORKS DEPARTMENT

APPROVED BY	BY	DATE
PRINCIPAL ENGINEER	CH	3/19/04
CONSTRUCTION ADMIN.	DC	3/19/04
SURVEYOR		3/18/04
STREET SERVICES	RDT	3/17/04
TRAFFIC DIVISION	JC	3/18/04
PARK AND REC. DEP.		

APPROVED BY: _____ CITY ENGINEER
DATE: 3/23/04

ALESSANDRO BOULEVARD MEDIAN IMPROVEMENTS IRRIGATION PLAN
(FROM BARTON ST. TO VISTA GRANDE DR.)

HORIZ. SCALE: 1" = --

ACCT. NO. 9579230214-440302xx

R-37421

SHEET 1 OF 2

P.W.: COMMON/COMPLETE/R3742-11
PARK & REC: PC440RM/PRP04-0002

INDEXED 3-25-04 4H

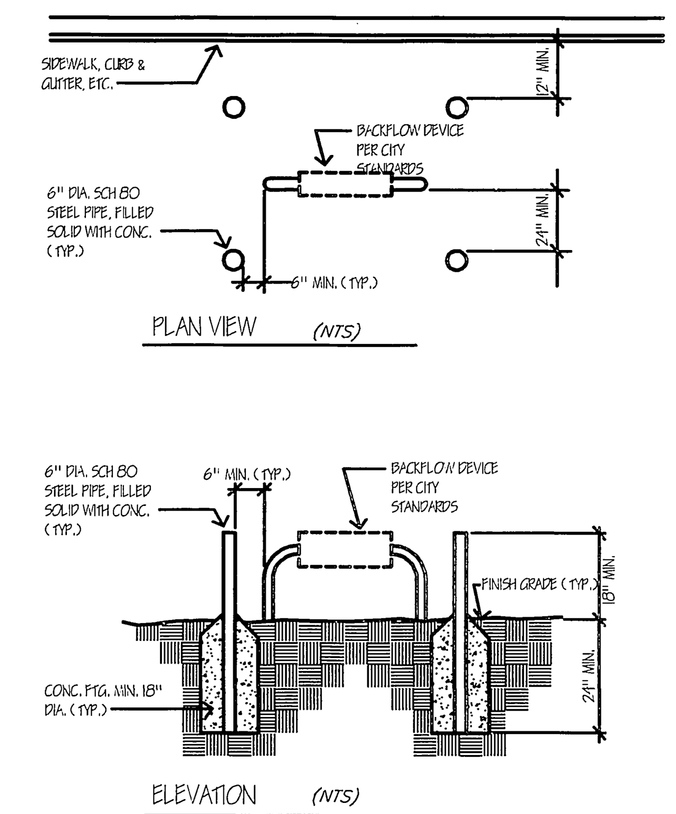

3 TYPICAL BACKFLOW BARRIER POSTS

(PARK & REC. STD. 4019 APPROVED 8-28-2003)

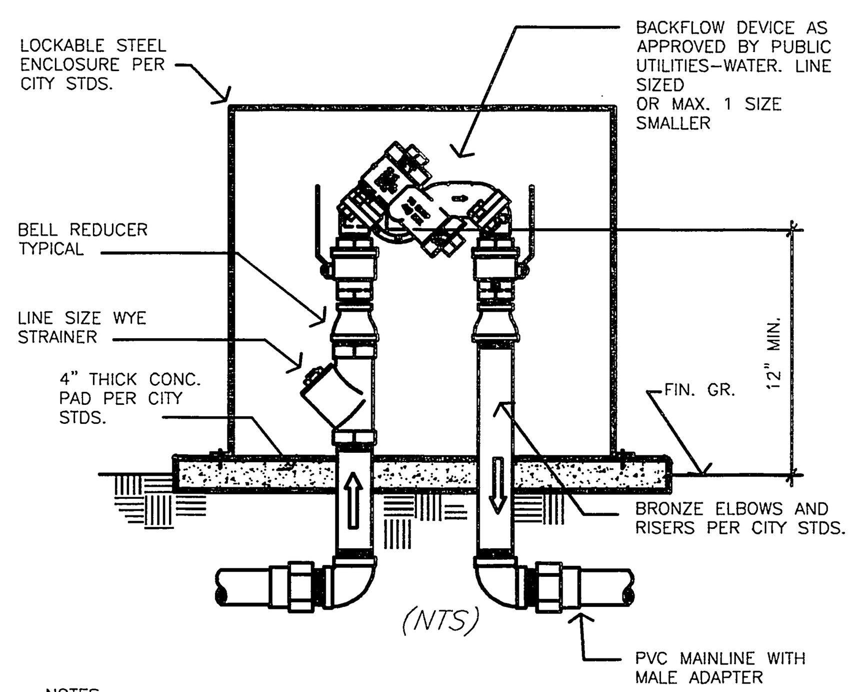

NOTES:
1) Install backflow device square with hardscape elements as approved by the Park Projects Inspector in the field.
2) Coordinate with Public Utilities-Water for location of backflow and water service. Wherever possible, locate service and backflow in the parkway at mid-block a minimum of 150' from the BCR at the nearest intersection per City standards.

2 TYPICAL REDUCED PRESSURE BACKFLOW DEVICE

(PARK & REC. STD. 4011 APPROVED 8-28-2003)

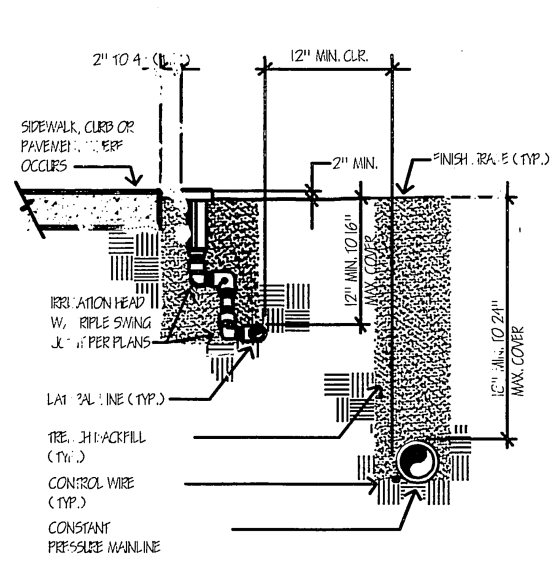

1 TYPICAL TRENCH & LINE PLACEMENT

(PARK & REC. STD. 4010 APPROVED 8-28-2003)

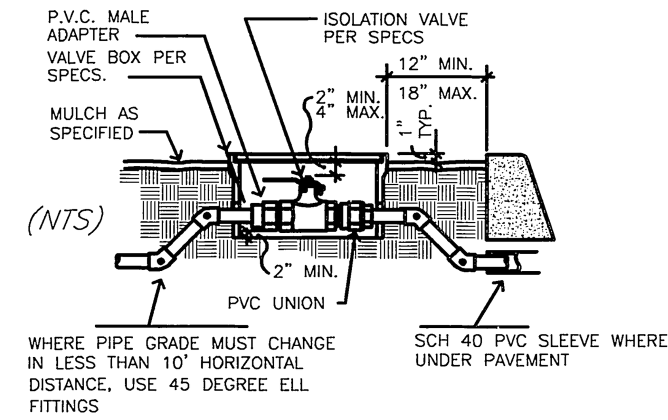

7 ISOLATION VALVE IN BOX

(PARK & REC. STD. 4052 APPROVED 8-23-2003)

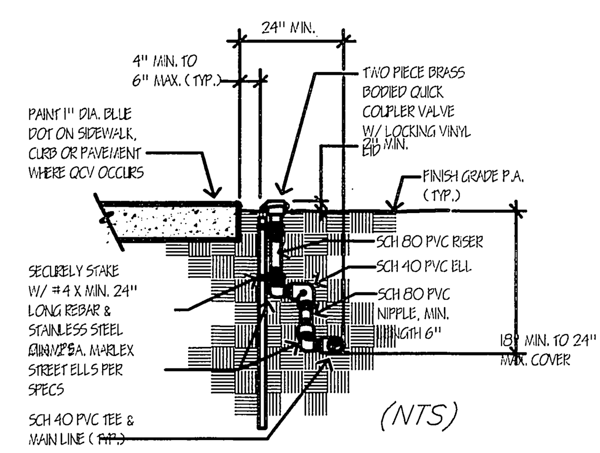

6 TYPICAL QUICK COUPLER VALVE

(PARK & REC. STD. 4050 REVISED 8-28-2003)

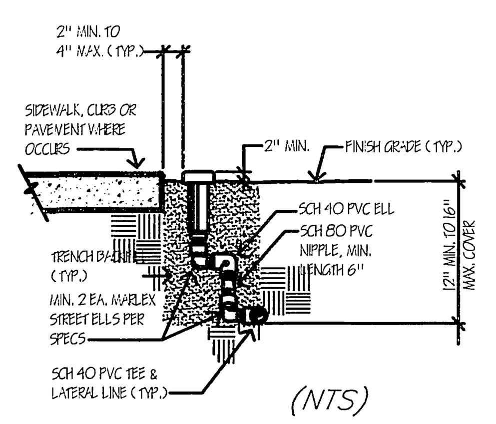

5 TYPICAL IRRIGATION SPRAY HEAD

(PARK & REC. STD. 4040 APPROVED 8-28-2003)

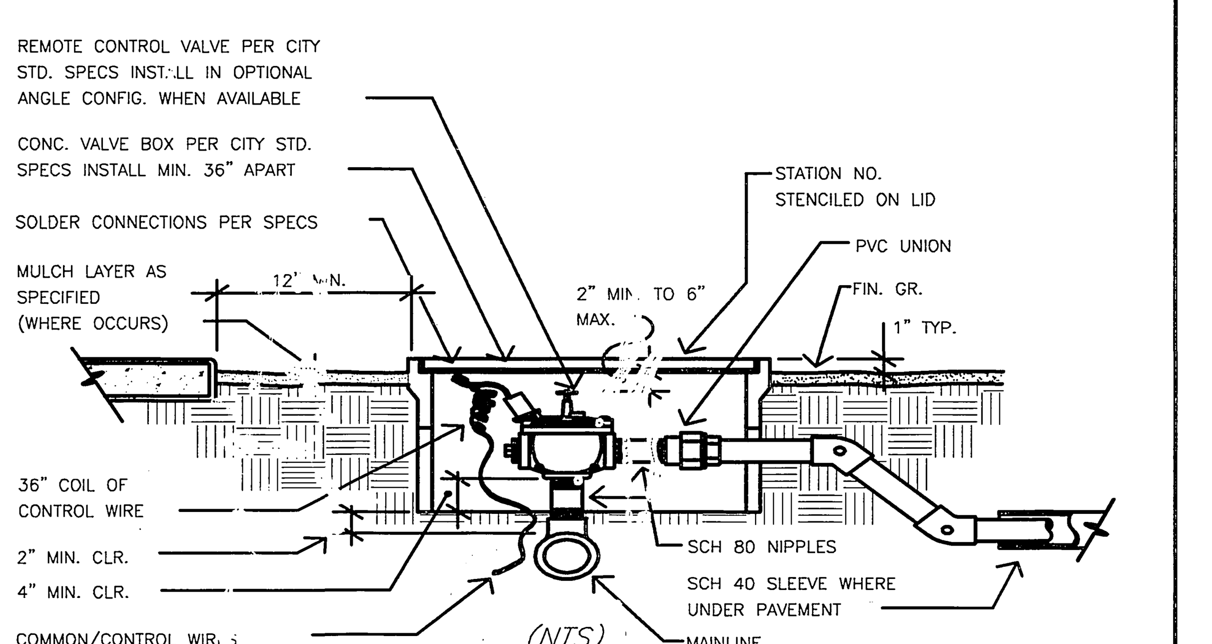

NOTES:
1) EACH VALVE SHALL HAVE ITS OWN TEE OR ELL CONNECTION TO THE MAINLINE. NO MANIFOLD CONNECTIONS.
2) PROVIDE MINIMUM 3' CLEAR DISTANCE BETWEEN VALVES.
3) INSTALL VALVE BOX SO THAT BOX DOES NOT REST ON ANY IRRIGATION LINES.
4) PROVIDE STAMPED BRASS TAG 1/2" BY 1" W/ 1/4" HIGH SEQUENCE NUMBER ON ALL CONTROL WIRES.
5) WHERE PIPE DEPTH MUST CHANGE IN LESS THAN 10' HORIZONTAL DISTANCE, USE 45 DEGREE ELBOWS.

4 TYPICAL REMOTE CONTROL VALVE

(PARK & REC. STD. 4030 APPROVED 8-28-2003)

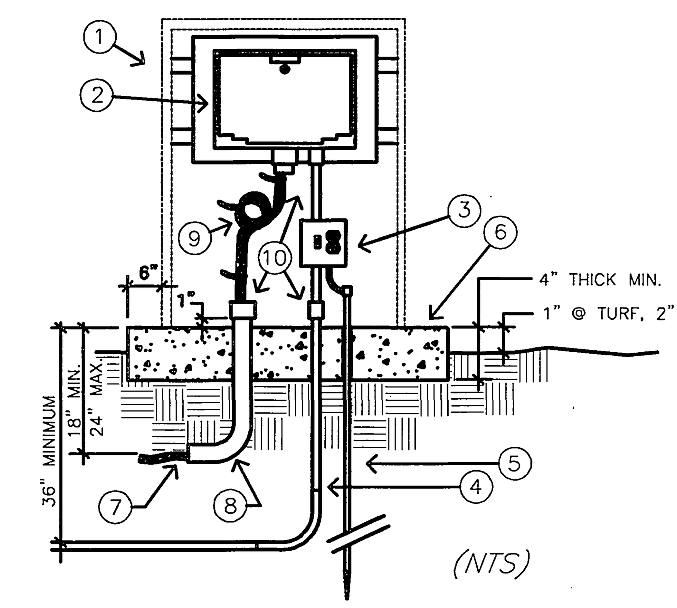

CONSTRUCTION NOTES:

1. STRONG BOX STAINLESS STEEL ENCLOSURE, MODEL SIZED TO FIT CONTROLLER, WITH SERVICE ADDRESS STENCILED ON LOCKING HINGED DOOR. SECURELY ANCHOR ENCLOSURE TO CONCRETE PAD.
2. WEATHER PROOF AUTOMATIC CONTROLLER, SECURELY WALL MOUNTED TO ENCLOSURE.
3. SQUARE D BREAKER BOX MODEL Q02-4L70S, OR APPROVED EQUAL WITH SINGLE 15 AMP BREAKER AND DUPLEX OUTLET. MAKE 120 V POWER AND GROUND CONNECTION AT BREAKER BOX. MOUNT IN ENCLSOURE.
4. 3-#8 CU THW WIRES IN MIN. 2" SCH 40 PVC CONDUIT FROM CONTROLLER TO POWER SOURCE. BOND SERVICE TO BREAKER BOX.
5. #8 CU COPPER GROUND WIRE AND 5/8" BY 8' LONG DRIVEN COPPER GROUNDING ROD WITHIN ENCLOSURE. DRIVE ROD PRIOR TO INSTALLATION OF ENCLOSURE.
6. CONCRETE PAD, EXTEND SUFFICIENT DISTANCE IN FRONT OF ENCLOSURE TO ALLOW UNOBSTRUCTED AREA FOR DOOR SWING FREE OF PLANTINGS, 6" MIN. BEYOND ENCLOSURE ON ALL OTHER SIDES.
7. LOW VOLTAGE DIRECT BURIAL WIRES TO CONTROL VALVES.
8. 90° WRAPPED HDG SWEEP ELL, SIZED TO FIT WIRE FOR NUMBER OF STATIONS ON THE CONTROLLER, PLUS SPARES AND COMMON.
9. THREE FOOT EXPANSION LOOP OF CONTROL WIRE, NEATLY LACED WITH ZIP-LOCKS. MAKE CONNECTION DIRECTLY TO IRRIGATION CONTROLLER TERMINALS FOR 12 STATION & SMALLER. USE TERMINAL STRIPS FOR CONTROLLERS LARGER THAN 12 STATIONS.
10. PROVIDE INSULATING ELECTRICAL BUSHINGS AT CONTROLLER AND END OF CONDUITS.

9 TYPICAL IRRIGATION CONTROLLER

(PARK & REC. STD. 4070 REVISED 11-21-2002)

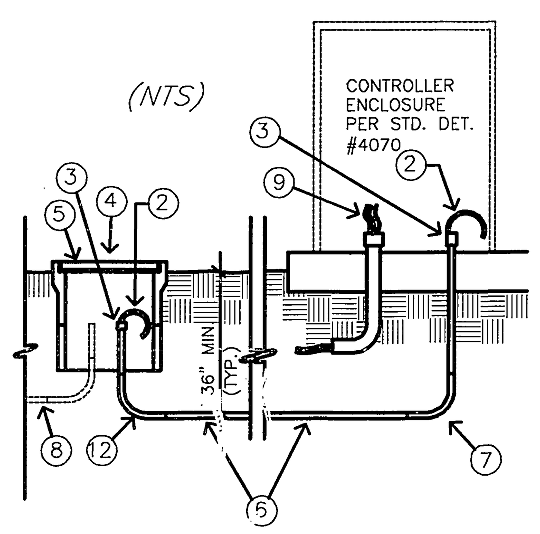

CONSTRUCTION NOTES:

1. COORDINATE W/UTILITIES-ELECTRIC(909/826-5-03).
2. 3-#8 CU THW WIRES. CONTRACTOR PROVIDES [illegible] FEET OF WIRE BEYOND CONDUIT END AT UGS BOX AND 4 FEET OF WIRE AT CONTROLLER. ID NEUTRAL.
3. PROVIDE INSULATING BUSHING, TERMINATE CONDUIT PER UTILITIES SPEC. UGS-311.
4. P.U. ELECTRIC WILL MAKE SERVICE CONNECTIONS IN UGS BOX FOR NON-METERED SERVICE.
5. EXISTING ELECTRIC SERVICE BOX, SIZE PER PUBLIC UTILITIES STANDARDS.
6. MIN. 2" SERVICE CONDUIT PER CITY STDS.; DB BELOW GRADE, HDG ABOVE GRADE, HDG WRAPPED SWEEPS.
7. LINE SIZE WRAPPED HDG SWEEP ELL, MIN. 9" RAD. (TYP.)
8. EXISTING SERVICE CONDUIT.
9. LOW VOLTAGE IRRIGATION CONTROL WIRE & CONDUIT PER P&R STD. SPECS.

8 TYPICAL ELECTRIC SERVICE

(PARK & REC. STD. 4062 REVISED 8-28-2003)

IRRIGATION SYSTEM DESIGN CRITERIA

WATER SERVICE:
CONTRACTOR SHALL CONTACT WESTERN MUNICIPAL WATER DISTRICT AND OBTAIN AND PAY FOR NEW WATER METER(S) AS NECESSARY TO ADEQUATELY SERVE THE IRRIGATION SYSTEM AS DESIGNED. METER AND BACKFLOW DEVICES SHALL BE LOCATED IN THE PARKWAY A MINIMUM OF 150' FROM ANY INTERSECTION

ALL WATER COSTS THROUGHOUT THE MAINTENANCE AND PLANT ESTABLISHMENT PERIOD.

ELECTRIC SERVICE:
CONTRACTOR SHALL CONTACT THE CITY OF RIVERSIDE, PUBLIC UTILITIES, ELECTRIC DIVISION AND SHALL OBTAIN AND PAY FOR NEW "NON-METERED" ELECTRIC SERVICE AS NECESSARY TO SERVE THE NEW IRRIGATION CONTROLLER. SERVICE SHALL BE UNDERGROUND TYPE AND SHALL BE COORDINATED WITH THE CONTROLLER LOCATION. OR MAJOR DRIVEWAY (i.e. CURB RETURN TYPE DRIVEWAY OPENING). CONTRACTOR SHALL BE RESPONSIBLE FOR

IRRIG. CONTROLLER:
THE IRRIGATION CONTROLLER SHALL BE SIZED TO ACCOMMODATE THE NUMBER OF VALVES REQUIRED TO SERVE THE ENTIRE PROJECT AND TO PROVIDE A MINIMUM OF TWO SPARE STATIONS. THE CONTROLLER SHALL BE THE TYPE AND MANUFACTURER AS INDICATED ON THE PLANS. CONTROLLER SHALL BE WEATHERPROOF, WALL-MOUNT TYPE, INSTALLED WITHIN A LOCKING METAL ENCLOSURE, AND SHALL BE LOCATED MID-BLOCK IN THE PARKWAY A MINIMUM OF 150' FROM ANY INTERSECTION OR MAJOR DRIVEWAY (CURB RETURN TYPE DRIVEWAY OPENING).

MAINLINE & SLEEVES:
ALL LINES BENEATH THE STREET (I.E. NOT WITHIN THE LANDSCAPE MEDIAN PLANTING AREAS) SHALL BE CONSTANT PRESSURE LINES INSTALLED IN SLEEVES. SLEEVES SHALL BE INSTALLED IN STRAIGHT LINES (NO TURNS OR BENDS, EITHER VERTICAL OR HORIZONTAL). PROVIDE A LINE SIZE BALL VALVE WITHIN A VALVE BOX IMMEDIATELY UPSTREAM OF LINE ENTERING THE STREET AREA. SIZE MAINLINE TO KEEP WATER VELOCITY BELOW 5 FEET PER SECOND.

CONTROL WIRE:
ALL CONTROL WIRE LOCATED UNDER PAVEMENT OF ANY TYPE SHALL BE SEPARATELY SLEEVED. PROVIDE A MINIMUM OF TWO SPARE CONTROL WIRE AT EACH END OF THE PROJECT, STUBBED OUT IN A VALVE BOX.

LATERAL LINES:
SIZE ALL LATERAL LINES AS NECESSARY TO KEEP WATER VELOCITY BELOW 5 FEET PER SECOND. DESIGN LATERAL LINE PLACEMENTS AT EDGES OF PLANTING SPACES TO AVOID CONFLICT WITH PLANTINGS.

CONTROL VALVES:
ALL IRRIGATION CONTROL VALVES SHALL BE SIZED TO PROVIDE THE WATER VOLUME REQUIRED WITH PRESSURE LOSS THROUGH THE VALVE KEPT AT BELOW A MAXIMUM OF 10% OF THE AVAILABLE STATIC PRESSURE. INSTALL VALVES IN "ANGLE" CONFIGURATION WHERE AVAILABLE. ALL STATIONS SHALL BE SIZED TO AVOID STATIONS WITH MORE THAN 20 GPM DEMAND OR 50 HEADS PER STATION WHICHEVER IS GREATER.

QUICK COUPLERS:
PROVIDE QUICK COUPLER VALVES AT A MINIMUM OF 50' FROM THE END OF THE LANDSCAPED AREA IN EACH ISLAND, AND SPACED AT A MAXIMUM OF 50' O.C. IN SHRUB AREAS AND 75' O.C. IN TURF AREAS.

HEADS:
ALL HEADS SHALL BE OF THE TYPE AND MANUFACTURER INDICATED ON THE PLANS AND SHALL BE INSTALLED WITH TRIPLE SWING JOINTS AS DETAILED.

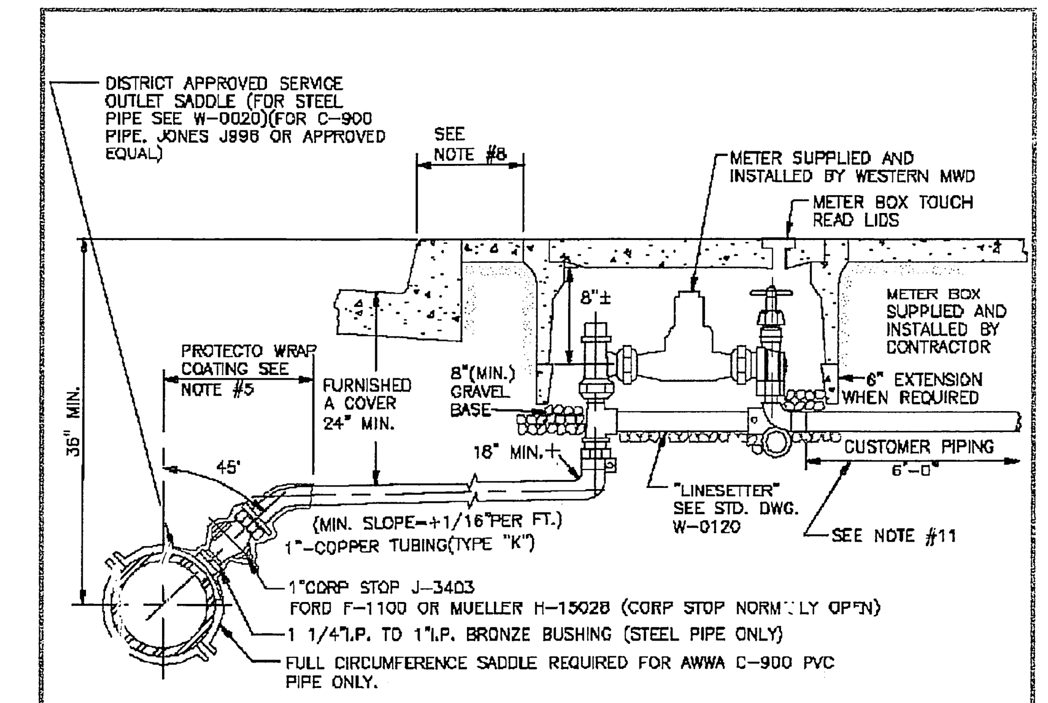

NOTES:
1. ALL PIPE & FITTINGS BETWEEN AND INCLUDING THE STOPS SHALL:
   A. BE MADE OF BRASS OR BRONZE.
   B. BE DESIGNED FOR MORE THAN 175 P.S.I. (COLD) WATER WORKING PRESSURE.
2. ALL BARE STEEL OR IRON SHALL BE COATED AND PROTECTED AS PER SPECS. PRIOR TO PLACING BACKFILL.
3. PRESSURE TEST PRIOR TO WRAPPING OR BACKFILLING.
4. ALTERNATE MATERIALS MAY BE USED UPON APPROVAL BY THE DISTRICT.
5. CORP. STOP, FITTINGS & SERVICE LINE WITHIN 3' OF SADDLE SHALL BE COATED WITH #1170 PRIMER & 20 MIL. MIN. WRAP ON STEEL PIPE ONLY. WRAP CORP. STOP ONLY FOR P.V.C.
6. ALL SERVICE PIPE & TUBING SHALL BE LAID ON A CONSTANT SLOPE UP FROM THE WATER MAIN TO METER. NO DIPS OR POCKETS IN LINE WILL BE PERMITTED.
7. THREAD NOTATION SHOWS THUS: IP=IRON PIPE THREAD
8. METER BOX IS TO BE LOCATED PER CITY STANDARDS OR COUNTY STANDARDS WHICHEVER HAS JURISDICTION. COORDINATE LOCATION ALONG LOT FRONTAGE WITH W.M.W.D. INSPECTOR.
9. METER BOXES SHALL BE J&R PW 5 1/4-OR CONCRETE AND ONE-PIECE POLYMER COVER TOUCH READ LID, ARMORCAST PRODUCTS CO. POLYMER COVER #A6001420 (OR APPROVED EQUAL).
10. 6" EXTENSION #38-S BROOKS OR APPROVED EQUAL (WHEN REQUIRED).
11. CUSTOMER PIPING REQUIRED TO BE SCHEDULE 80 PVC FOR 6' MINIMUM, THREAD PIPE TO FIT LINESETTER, NO SLIP FITTINGS ALLOWED.
12. MINIMUM 5'-0" SEPARATION BETWEEN SEWER LATERAL AND WATER SERVICE.

PROTECTED SERVICE — ISSUE DATE: 9-13-02

WESTERN MUNICIPAL WATER DISTRICT	APPROVED ____ 19__ DISTRICT OPERATIONS MANAGER	STANDARD DRAWING DOMESTIC WATER SERVICE 3/4" AND 1"	STD. DWG. NO. W-0070

*AS-BUILT PER PLANS 7-08-05 LH

WESTERN MUNICIPAL WATER SERVICE DISTRICT	CITY OF RIVERSIDE, CALIFORNIA ELECTRICAL DIVISION, PUBLIC UTILITIES DEPARTMENT
APPROVED BY [signature] DATE 3-22-04	APPROVED BY [signature] DATE 3-19-04

ENGINEER IN RESPONSIBLE CHARGE
[signature]
MICHAEL KATUSIAN
R.C.E. No. 36686 expires 6/30/04
DATE 3/19/04

REGISTERED PROFESSIONAL ENGINEER — MICHAEL KATUSIAN — No. 36686 — Exp. 6-30-04 — CIVIL — STATE OF CALIFORNIA

MARK	REVISIONS	APPR.	DATE

DESIGNED BY FYL DRAWN BY FYL CHECKED BY MK

CITY OF RIVERSIDE, CALIFORNIA
PUBLIC WORKS DEPARTMENT

APPROVED BY	BY	DATE
PRINCIPAL ENGINEER	[initials]	3/19/04
CONSTRUCTION ADMIN.	[initials]	3/19/04
SURVEYOR	[initials]	[illegible]
STREET SERVICES	[initials]	3/18/04
TRAFFIC DIVISION	[initials]	3/18/04
PARK AND REC. DEP.		

APPROVED BY [signature] CITY ENGINEER
DATE 3/23/04

ALESSANDRO BOULEVARD MEDIAN IMPROVEMENTS IRRIGATION PLAN
(FROM BARTON ST. TO VICTA GRANDE DR.)

HORIZ. SCALE: 1" = --

ACCT. NO. 9579230214-440302xx

R-37421

SHEET 2 OF 2

P.W.: COMMON/COMPLETE/R3742-I1
PARK & REC: PC4408M/PRP04-0002

INDEXED 3-25-04 LH