STREET IMPROVEMENT PLANS
TRACT NO. 30756
CITY OF RIVERSIDE, CALIFORNIA

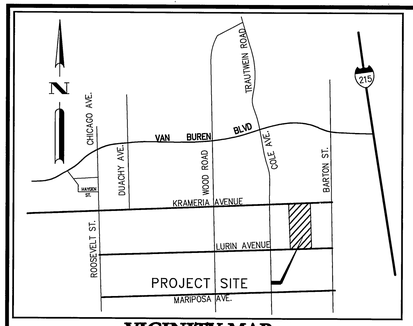

VICINITY MAP

SEC 29 OF T.3S, R.4W

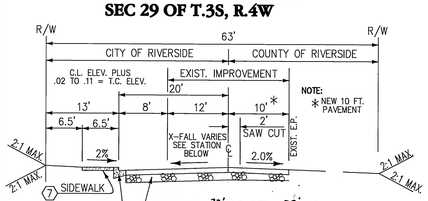

LURIN AVENUE

T.I.=6.0

STA. 95+03.86 TO STA. 96+03.86 @ 2.0%

STA. 98+00.00 TO STA. 100+00.00 @ 1.97 TO 2.69%

STA. 102+00.00 TO STA. 107+00.00 @ 1.97% *

N.T.S.

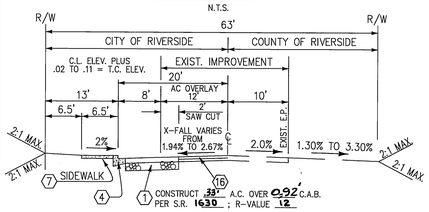

LURIN AVENUE

T.I.=6.0

STA. 95+03.86 TO STA. 98+00.00

STA. 100+00.00 TO STA. 102+00.00

N.T.S.

TYPICAL STREET SECTION

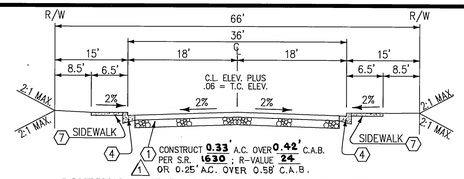

LONESTAR LANE, SHADOWBROOK WAY & CHANDELLE WAY
ESTRELLA HILLS ST. & COUNTRY ROSE DRIVE

COUNTRY ROSE DRIVE= STA. 8+53.00 TO 10+00.00

T.I.=5.0

N.T.S.

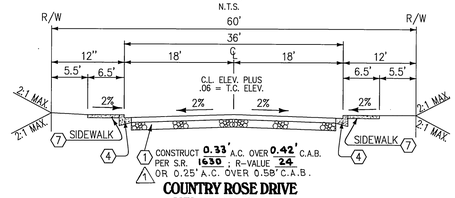

COUNTRY ROSE DRIVE
MERIDIANA COURT

COUNTRY ROSE DR. STA. 10+00.00 TO STA.16+89.63

T.I.=5.0

N.T.S.

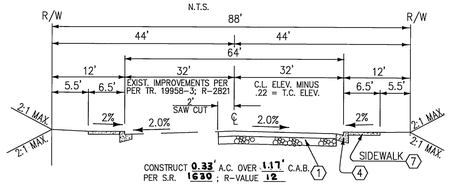

KRAMERIA AVENUE

T.I.= 7.0

STA. 33+18.53 TO STA. 38+29.65

N.T.S.

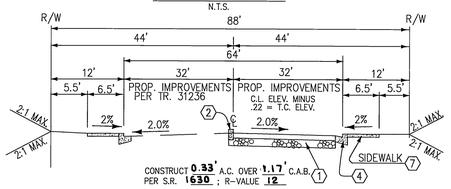

KRAMERIA AVENUE

T.I.=7.0

STA. 38+29.65 TO STA. 43+14.29

N.T.S.

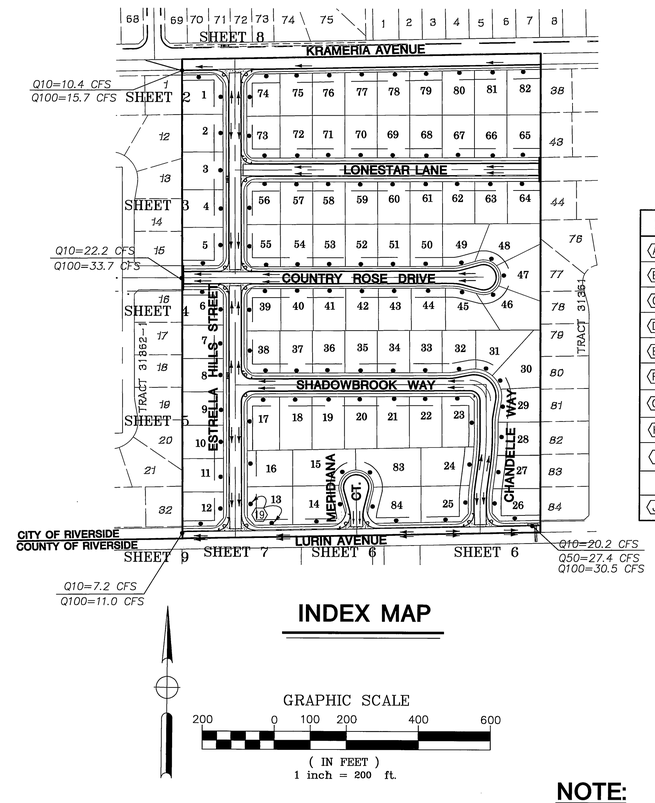

INDEX MAP

GRAPHIC SCALE

200 0 100 200 400 600

(IN FEET)
1 inch = 200 ft.

STREET SIGN SCHEDULE

(A)	KRAMERIA AVENUE ESTRELLA HILLS STREET	19600 9400
(B)	LONESTAR LANE ESTRELLA HILLS STREET	19600 9400
(C)	COUNTRY ROSE DRIVE ESTRELLA HILLS STREET	19600 9400
(D)	COUNTRY ROSE DRIVE ESTRELLA HILLS STREET	19600 9500
(E)	SHADOWBROOK WAY ESTRELLA HILLS STREET	19600 9500
(F)	CHANDELLE WAY LURIN AVENUE	9500 19700
(G)	MERIDIANA COURT LURIN AVENUE	9500 19600
(H)	SHADOWBROOK WAY CHANDELLE WAY	19600 9500
(I)	LURIN AVENUE ESTRELLA HILLS STREET	19600 9500
(J)	R-1 (STOP SIGN – 30")	8

INSTALL SIGNS PER CITY OF RIVERSIDE STANDARDS 662, 662A & 666

GENERAL NOTES

1. NO PERSON SHALL PERFORM ANY CONSTRUCTION ACTIVITY OR INSTALL ANY OBJECTS WITHIN THE PUBLIC RIGHT–OF–WAY OR EASEMENTS OF THE CITY OF RIVERSIDE WITHOUT A VALID CONSTRUCTION PERMIT OR A STREET OPENING PERMIT OR AN ENCROACHMENT PERMIT ISSUED BY THE CITY'S PUBLIC WORKS DEPARTMENT.
2. IT SHALL BE THE RESPONSIBILITY OF THE CONTRACTOR TO CLEAR THE RIGHT–OF–WAY IN ACCORDANCE WITH THE PROVISIONS OF LAW AS IT AFFECTS EACH UTILITY INCLUDING IRRIGATION LINES AND APPURTENANCES AND AT NO COST TO THE CITY.
3. CONSTRUCTION SHALL BE IN ACCORDANCE WITH THE CITY OF RIVERSIDE DEPARTMENT OF PUBLIC WORKS, STANDARD DRAWINGS, ITS SUPPLEMENTAL NOTES AND THE STANDARD SPECIFICATIONS FOR PUBLIC WORKS CONSTRUCTION, CURRENT EDITION.
4. THE PRIVATE ENGINEER SIGNING THESE PLANS IS RESPONSIBLE FOR ASSURING THE ACCURACY AND ACCEPTABILITY OF THE WORK HEREON. IN THE EVENT OF DISCREPANCIES ARISING DURING CONSTRUCTION, THE PRIVATE ENGINEER SHALL BE RESPONSIBLE FOR DETERMINING AN ACCEPTABLE SOLUTION AND REVISING THE PLANS FOR APPROVAL BY THE CITY.
5. THE DEVELOPER SHALL BE RESPONSIBLE FOR PRESERVING OR REESTABLISHING AND REFERENCING SURVEY MONUMENT DESTROYED, DISTURBED OR BURIED AS A RESULT OF CONSTRUCTION SHOWN HEREON.
6. ALL FLAGGED ELEVATIONS SHALL BE STAKED IN THE FIELD BY THE PRIVATE ENGINEER.
7. WHERE NEW PAVEMENT IS TO JOIN THE EXISTING PAVEMENT, THE EDGE OF THE EXISTING PAVEMENT SHALL BE TRIMMED IN A SMOOTH AND STRAIGHT LINE. CONSTRUCT MATCH–UP PAVING AS SHOWN ON THE PLANS AND OVERLAY PAVING AS DIRECTED IN THE FIELD TO PRODUCE A SMOOTH SECTION.
8. THE SUBDIVIDER SHALL ARRANGE FOR A SOIL TEST TO BE MADE BY A SOILS ENGINEER AFTER THE STREET HAVE BEEN PREPARED TO ROUGH GRADE AND PRIOR TO CURB AND GUTTER CONSTRUCTION. DEPTH OF BASE MATERIAL AND A.C. PAVING SHALL BE DETERMINED BY THE CITY OF RIVERSIDE DESIGN STANDARDS AND TEST PROCEDURES.
9. ON ALL AREAS WITHIN PUBLIC RIGHT–OF–WAY WHERE THE FILL IS ONE (1) FOOT OR GREATER, A LETTER WILL BE REQUIRED FROM THE SOILS ENGINEER, CERTIFYING THE COMPACTION OF THE FILL BELOW SUBGRADE, PRIOR TO ISSUANCE OF THE CONSTRUCTION PERMIT/CUT SHEETS.
10. ALL TRAFFIC SIGNS SHALL BE INSTALLED PRIOR TO OPENING THE STREETS TO TRAFFIC.
11. ANY TRAFFIC CONTROL STRIPING OBLITERATED AND/OR BADLY WORN DURING CONSTRUCTION SHALL BE RESTORED BY THE CONTRACTOR WITHIN FIVE DAYS AFTER NOTIFICATION FROM THE CITY INSPECTORS.
12. FINAL STRIPING FOR TRAFFIC CONTROL AND/OR PAVEMENT MARKING TO BE THE RESPONSIBILITY OF THE CONTRACTOR.
13. THE CONTRACTOR SHALL CALL IN A LOCATION REQUEST TO UNDERGROUND SERVICE ALERT (USA), PHONE # 1–800–227–2600, TWO WORKING DAYS BEFORE DIGGING. NO CONSTRUCTION PERMIT WILL BE ISSUED BY THE PUBLIC WORKS DEPARTMENT INVOLVING EXCAVATION FOR UNDERGROUND FACILITIES UNLESS THE APPLICANT HAS BEEN PROVIDED AN INQUIRY IDENTIFICATION NUMBER BY U.S.A.
14. THE CONTRACTOR SHALL COORDINATE TRENCHING FOR CABLE TELEVISION WITH OTHER TRENCHING WITHIN THE SUBDIVISION.
15. CONSTRUCT DRIVEWAY APPROACHES PER STANDARD DWG. 302. EXACT SIZE AND LOCATION TO BE STAKED BY THE PRIVATE ENGINEER PRIOR TO CONSTRUCTION OF THE CURB AND GUTTER.
16. BEFORE THE RIPRAP AT THE OUTLET OF ANY DRAINAGE STRUCTURE IS ACCEPTED BY THE CITY, IT SHALL BE UNDER FLOWS AS CLOSE AS POSSIBLE TO DESIGN CONDITIONS WITH WATER OBTAINED FROM THE FIRE HYDRANTS IN THE IMMEDIATE AREA.

COUNTY GENERAL NOTES

1. IT SHALL BE THE RESPONSIBILITY OF THE DEVELOPER/OWNER OR CONTRACTOR TO APPLY TO THE RIVERSIDE COUNTY TRANSPORTATION DEPARTMENT, PERMIT SECTION, FOR AN ENCROACHMENT PERMIT FOR ALL WORK PERFORMED WITHIN PUBLIC RIGHT–OF–WAY, DEDICATED AND ACCEPTED FOR PUBLIC USE; AND TO BE RESPONSIBLE FOR SATISFACTORY COMPLIANCE FOR ALL CURRENT ENVIRONMENTAL REGULATIONS DURING THE LIFE OF CONSTRUCTION ACTIVITIES FOR THIS PROJECT. ADDITIONAL STUDIES AND/OR PERMITS MAY BE REQUIRED.
2. THE CONTRACTOR SHALL BE RESPONSIBLE FOR THE CLEARING OF THE PROPOSED WORK AREA, AND RELOCATION COSTS OF ALL EXISTING UTILITIES. PERMITEE MUST INFORM COUNTY OF CONSTRUCTION AT LEAST 48 HOURS PRIOR TO BEGINNING OF CONSTRUCTION. PHONE: (909) 955–6885
3. ALL WORK SHALL CONFORM TO THE REQUIREMENTS OF THE RIVERSIDE COUNTY TRANSPORTATION DEPT. IMPROVEMENT STANDARDS AND SPECIFICATIONS, LATEST EDITION, COUNTY ORDINANCE NO. 461 AND SUBSEQUENT AMENDMENTS.
4. IT SHALL BE THE RESPONSIBILITY OF THE DEVELOPER TO NOTIFY THE ENGINEER TO INSTALL STREET CENTERLINE MONUMENTS AS REQUIRED BY RIVERSIDE COUNTY ORDINANCE NO. 461.
5. ALL UNDERGROUND FACILITIES, WITH LATERALS, SHALL BE IN PLACE PRIOR TO PAVING THE STREET INCLUDING, BUT NOT LIMITED TO THE FOLLOWING: SEWER, WATER, ELECTRIC, GAS STORM DRAINS.
6. ASPHALTIC EMULSION (FOG SEAL) SHALL BE APPLIED NOT LESS THAN FOURTEEN DAYS FOLLOWING PLACEMENT OF THE ASPHALT SURFACING. FOG SEAL AND PAINT BINDER SHALL BE APPLIED AT A RATE OF 0.05 & 0.03 GALLON PER SQUARE YARD RESPECTIVELY. ASPHALTIC EMULSION SHALL CONFORM TO SECTION 37, 39 AND 94 OF THE STATE STANDARD SPECIFICATIONS.
7. AS DETERMINED BY THE TRANSPORTATION DIRECTOR, THE DEVELOPER IS RESPONSIBLE AS A MINIMUM FOR ROAD IMPROVEMENTS TO CENTERLINE, AND MAY BE REQUIRED TO RECONSTRUCT EXISTING PAVEMENT, INCLUDING BASE, AND MATCHING OVERLAY REQUIRED TO MEET THE STRUCTURAL STANDARDS FOR THE CURRENT ASSIGNED TRAFFIC INDEX."
8. IT SHALL BE THE RESPONSIBILITY OF THE CONTRACTOR OR DEVELOPER TO INSTALL AND MAINTAIN ALL CONSTRUCTION, REGULATORY, GUIDE AND WARNINGS SIGNS WITHIN THE PROJECT LIMITS AND ITS SURROUNDINGS TO PROVIDE SAFE PASSAGE FOR THE TRAVELING PUBLIC AND WORKERS UNTIL THE FINAL COMPLETION AND ACCEPTANCE OF THE PROJECT BY THE COUNTY.

   A TRAFFIC CONTROL PLAN MUST BE SUBMITTED FOR REVIEW AND APPROVAL PRIOR TO OBTAINING AN ENCROACHMENT PERMIT.
9. ALL STREET SECTIONS ARE TENTATIVE. ADDITIONAL SOIL TESTS SHALL BE TAKEN BY THE COUNTY AFTER ROUGH GRADING TO DETERMINE THE EXACT STREET SECTION REQUIREMENTS. USE STANDARD NO. 401 IF EXPANSIVE SOILS ARE ENCOUNTERED.
10. STREET LIGHTS SHALL BE INSTALLED IN ACCORDANCE WITH THE APPROVED STREET LIGHTING PLAN PER CITY OF RIVERSIDE APPROVED STREET LIGHTING PLAN.

CONSTRUCTION NOTES & QUANTITY ESTIMATE

NO.	ITEMS	QUANTITY	UNIT
(1)	CONSTRUCT PAVING SECTION PER TYPICAL SECTION	98,204	SF
(2)	INSTALL REDWOOD HEADER	485	LF
(3)	CONSTRUCT 2' WIDE, 20' LONG @ 2 1/2" THICK AC DRAINAGE APRON	8.4	SF
(4)	CONSTRUCT TYPE I CURB & GUTTER (6") PER CITY OF RIVERSIDE STD. DWG. NO 200	9,302	LF
(5)	CONSTRUCT CROSS GUTTER PER CITY OF RIVERSIDE STD. DWG NO. 220 (W=PER PLAN)	6,721	SF
(6)	CONSTRUCT ACCESS RAMP PER CITY OF RIVERSIDE STD. DWG. NO 304,TYPE PER PLAN	19	EA
(7)	CONSTRUCT SIDEWALK PER CITY OF RIVERSIDE STD. DWG. NO. 325	48,672	SF
(8)	INSTALL STREET NAME SIGN PER CITY OF RIVERSIDE STD. NO 662A/662 AS APPLIES	9	EA
(9)	CONSTRUCT A.C. BERM, TYPE I, PER CITY OF RIVERSIDE STD. NO. 250	110	LF
(10)	INSTALL STOP SIGN (R–1)	8	EA
(11)	CONSTRUCT BARRICADE PER CITY OF RIVERSIDE STD. NO. 180	132	LF
(12)	CONSTRUCT TYPE II CURB & GUTTER (8") PER CITY OF RIVERSIDE STD. DWG. NO 200	68	LF
(13)	INSTALL RIP–RAP (SIZES AS PER PLAN)	27	TON
(14)	CONSTRUCT CATCH BASIN PER CITY OF RIVERSIDE STD. DWG. NO.405	1	EA
(15)	CONSTRUCT REINFORCED CONCRETE BOX CULVERT NO.1 PER DETAIL ON SHEET 8	46	LF
(16)	CONSTRUCT A.C. OVERLAY	4,841	SF
(18)	CONSTRUCT DRIVEWAY APPROACH PER CITY OF RIVERSIDE STD. DWG. NO. 302	84	EA
(19)	PLANT TREES PER CITY OF RIVERSIDE PARK & RECREATION DEPT. STD.	101	EA
	INSTALL RESIDENTIAL LIGHTING (SEE STREET LIGHT PLAN)		

CONSTRUCTION NOTES & QUANTITY ESTIMATE (COUNTY)

NO.	ITEMS	QUANTITY	UNIT
(1)	CONSTRUCT PAVING SECTION PER TYPICAL SECTION	4,560	SF
(13)	INSTALL RIP–RAP (SIZES AS PER PLAN)	1	CY
(14)	CONSTRUCT CATCH BASIN PER CITY OF RIVERSIDE STD. DWG. NO.405	1	EA
(15)	CONSTRUCT REINFORCED CONCRETE BOX CULVERT NO.1 PER DETAIL ON SHEET 8	20	LF
	EXCAVATE & FILL	25	CY
	IMPORT & FILL	5	CY
	SAWCUT	300	LF

NOTE:

1. APPROXIMATE TREE LOCATION. NO STREET TREES SHALL BE PLANTED WITHIN 10 FEET OF DRIVEWAYS OR CORNER CUTBACKS.
2. QUANTITIES SHOWN HEREON ARE FOR PERMIT AND / OR BONDING PURPOSES ONLY AND SHALL NOT BE USED FOR BIDDING. CONTRACTOR SHALL DETERMINE HIS OWN QUANTITIES AND BID TO COMPLETE THE PROJECT.
3. SEE CITY OF RIVERSIDE UTILITY APPROVED DRAWING FOR QUANTITY AND LOCATIONS OF REQUIRED STREET LIGHTS.

LEGEND:

● --- STREET TREES

--- OVERLAY

--- NEW PAVEMENT

INDEX OF SHEETS:

SHEET NO(S).	DESCRIPTION
1	TITLE SHEET
2 TO 7	PLAN & PROFILE
8 TO 9	PLAN & PROFILE, DETAIL & STORM DRAIN

DATE PREPARED: DECEMBER 2003

RIV. CO. NUMBER MS3939, IP040014

CITY BUSINESS TAX CERTIFICATE NO. 113295 EXP.08–30–2004

Underground Service Alert

CALL TOLL FREE BEFORE YOU DIG

Call: TOLL FREE
1-800
227-2600

TWO WORKING DAYS BEFORE YOU DIG

REVIEWED BY: 3 SHEETS (1-9)
WESTERN MUNICIPAL WATER DISTRICT
FOR NON–INTERFERENCE COMPLIANCE

CIVIL ENGINEER RCE 46212

DATE: 6/21/04

SEAL: REGISTERED PROFESSIONAL ENGINEER KHALED A. OTHMAN No. 33950 Exp. 6-30-06 CIVIL STATE OF CALIFORNIA

APPROVED FOR CONSTRUCTION WITHIN THE COUNTY OF RIVERSIDE ONLY

COUNTY OF RIVERSIDE
TRANSPORTATION DEPARTMENT

APPROVED BY:

KHALED A. OTHMAN R.C.E. 33950 — DATE 7/19/04

RECOMMENDED: WILLDAN — DATE 7/15/04

ENGINEERS NOTE:

CONTRACTOR AGREES THAT HE SHALL ASSUME SOLE AND COMPLETE RESPONSIBILITY FOR JOB SITE CONDITIONS DURING THE COURSE OF CONSTRUCTION OF THIS PROJECT, INCLUDING SAFETY OF ALL PERSONS AND PROPERTY; THAT THIS REQUIREMENT SHALL APPLY CONTINUOUSLY AND NOT BE LIMITED TO NORMAL WORKING HOURS, AND THAT THE CONTRACTOR SHALL DEFEND, INDEMNIFY AND HOLD THE OWNER AND THE ENGINEER HARMLESS FROM ANY LIABILITY, REAL OR ALLEGED, IN CONNECTION WITH THE PERFORMANCE OF WORK ON THIS PROJECT, EXCEPTING FOR LIABILITY ARISING FROM THE NEGLIGENCE OF THE OWNER OR ENGINEER.

THE EXISTENCE AND LOCATION OF ANY UNDERGROUND UTILITIES OR STRUCTURES SHOWN ON THESE PLANS ARE OBTAINED BY A DILIGENT SEARCH OF AVAILABLE RECORDS. THE CONTRACTOR IS REQUIRED TO TAKE ALL PRECAUTIONARY MEASURES TO PROTECT ALL THE UTILITIES SHOWN AND ANY OTHER LINES OR STRUCTURES NOT SHOWN ON THESE PLANS AND IS RESPONSIBLE FOR THE PROTECTION OF, AND ANY DAMAGE TO THESE LINES OR STRUCTURES.

NOTE: WORK CONTAINED WITHIN THESE PLANS SHALL NOT COMMENCE UNTIL AN ENCROACHMENT PERMIT AND/OR A GRADING PERMIT HAS BEEN ISSUED.

THE PRIVATE ENGINEER SIGNING THESE PLANS IS RESPONSIBLE FOR ASSURING THE ACCURACY OF DESIGN & ACCEPTABILITY OF THE WORK HEREON. IN THE EVENT OF DISCREPANCIES ARISING AFTER CITY APPROVAL OR DURING CONSTRUCTION, THE PRIVATE ENGINEER SHALL BE RESPONSIBLE FOR DETERMINING AN ACCEPTABLE SOLUTION AND REVISING THE PLANS FOR APPROVAL BY THE CITY.

DATE	BY	MARK	REVISIONS:	APPR	DATE
9/7/04	HJK/KH	1	STRUCTURAL SECTION (OPTION) PER S.R. 1630	KHZ	9-23-04

ENGINEER — CITY

CITY OF RIVERSIDE, CALIFORNIA
PUBLIC WORKS DEPARTMENT

APPROVED BY:	BY:	DATE:	APPROVED BY:
PRINCIPAL ENGINEER	PH	8/9/04	
PARK DEPARTMENT	—		
TRAFFIC DIVISION		8/9/04	CITY ENGINEER
STREET SERVICES		7/21/04	8/9/04 DATE

SEAL: REGISTERED PROFESSIONAL ENGINEER ROBERT T. FEDERIGHI No. 30000 Exp. 9-30-05 CIVIL STATE OF CALIFORNIA

HJK CONSULTANTS, INC.
Civil Engineering • Land Planning • Land Surveying
41769 Enterprise Circle N., #202, Temecula, Ca. 92590
Tel: (909) 719-3770 Fax: (909) 719-3780

PREPARED BY: ROBERT T. FEDERIGHI — R.C.E. NO. 30000 DATE 6/21/04

BENCHMARK:
CITY OF RIVERSIDE
ELEVATION: 1757.219 GPS–67
1–1/4" BRASS CAP IN A WELL MONUMENT, 5" DEEP IN THE CENTER OF BARTON STREET, 230 FEET SOUTHERLY OF THE INTERSECTION OF BARTON AND VAN BUREN BOULEVARD.

STREET IMPROVEMENT PLANS
RIV. CO. MS3939, IP040014
TRACT NO. 30756
TITLE SHEET

SCALE:

ACCOUNT NO. _____
DRAWING NUMBER
R- 3751
SHEET 1 OF 9
PW03-0357

As-Built-2/9/67 INDEXED 8-17-04 GH

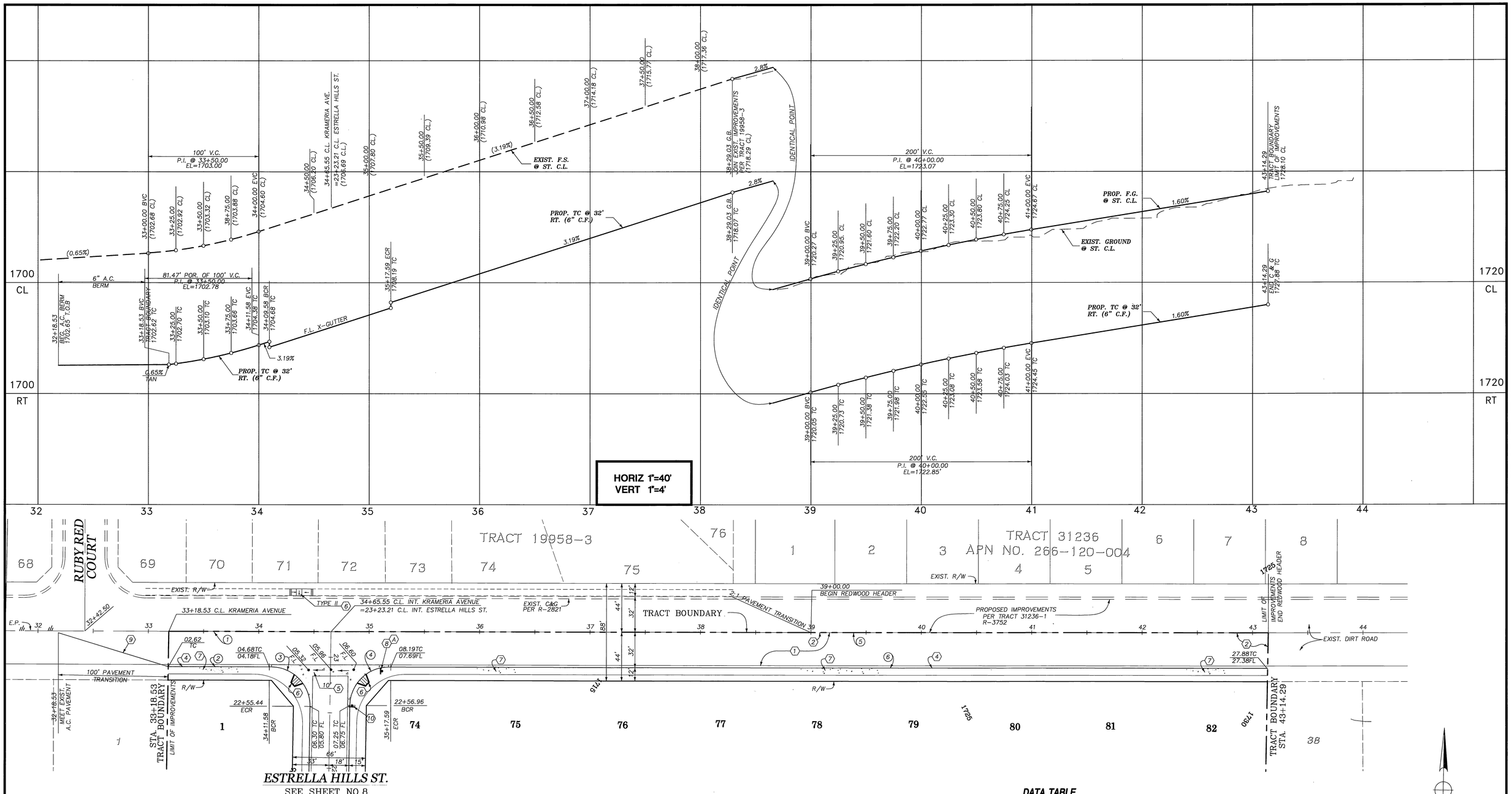

KRAMERIA AVENUE

DATA TABLE

NO	DELTA/BRG	RADIUS	LENGTH	TANGENT
1	N88°54'01"E		147.02'	
2	N88°54'01"E		91.51'	
3	Δ=90°49'19"	35.00'	55.48'	35.51'
4	Δ=89°10'41"	35.00'	54.48'	34.50'
5	N88°54'01"E		995.76'	
6	N88°54'01"E		794.18'	

GRAPHIC SCALE
40 0 20 40 80 120
(IN FEET)
1 inch = 40 ft.

CONSTRUCTION NOTES:

1. CONST. PAVING SECTION PER TYPICAL SECTION
2. INSTALL REDWOOD HEADER
4. CONST. TYPE I CURB & GUTTER (6") PER CITY OF RIVERSIDE STD. DRAWING NO 200
5. CONST. CROSS GUTTER PER CITY OF RIVERSIDE STD. DWG NO. 220
6. CONST. ACCESS RAMP PER CITY OF RIVERSIDE STD. DWG. NO 304, TYPE I
7. CONST. SIDEWALK PER CITY OF RIVERSIDE STD. DWG. NO. 325
8. INSTALL STREET NAME SIGN PER CITY OF RIVERSIDE STD. NO 662A
9. CONSTRUCT A.C. BERM, TYPE I, PER CITY OF RIVERSIDE STD. NO. 250
10. INSTALL STOP SIGN (R-1)

Underground Service Alert
Call: TOLL FREE
1-800 227-2600
TWO WORKING DAYS BEFORE YOU DIG

NOTE: WORK CONTAINED WITHIN THESE PLANS SHALL NOT COMMENCE UNTIL AN ENCROACHMENT PERMIT AND/OR A GRADING PERMIT HAS BEEN ISSUED.

THE PRIVATE ENGINEER SIGNING THESE PLANS IS RESPONSIBLE FOR ASSURING THE ACCURACY OF DESIGN & ACCEPTABILITY OF THE WORK HEREON. IN THE EVENT OF DISCREPANCIES ARISING AFTER CITY APPROVAL OR DURING CONSTRUCTION, THE PRIVATE ENGINEER SHALL BE RESPONSIBLE FOR DETERMINING AN ACCEPTABLE SOLUTION AND REVISING THE PLANS FOR APPROVAL BY THE CITY.

DATE	BY	MARK	REVISIONS:	APPR	DATE
ENGINEER				CITY	

CITY OF RIVERSIDE, CALIFORNIA
PUBLIC WORKS DEPARTMENT

APPROVED BY:	BY:	DATE:	APPROVED BY:
PRINCIPAL ENGINEER		8/9/04	
PARK DEPARTMENT			
TRAFFIC DIVISION		8/5/04	CITY ENGINEER
STREET SERVICES		7/27/04	8/9/04 DATE

SEAL: REGISTERED PROFESSIONAL ENGINEER ROBERT T. FEDERIGHI No. 30000 Exp. 9-30-05 CIVIL STATE OF CALIFORNIA

HK CONSULTANTS, INC.
Civil Engineering • Land Planning • Land Surveying
41769 Enterprise Circle N., #202, Temecula, Ca. 92590
Tel: (909) 719-3770 Fax: (909) 719-3780
PREPARED BY: ROBERT T. FEDERIGHI
R.C.E. NO. 30000
DATE 6/21/04

BENCHMARK:
CITY OF RIVERSIDE
ELEVATION: 1757.219 GPS-67
1-1/4" BRASS CAP IN A WELL MONUMENT, 5" DEEP IN THE CENTER OF BARTON STREET, 230 FEET SOUTHERLY OF THE INTERSECTION OF BARTON AND VAN BUREN BOULEVARD.

STREET IMPROVEMENT PLANS
TRACT NO. 30756
KRAMERIA AVENUE
STA. 33+18.53 TO STA. 43+14.29
SCALE: HORIZ.: 1'=40' VERT.: 1'=4'

ACCOUNT NO. _____
DRAWING NUMBER
R- 3751
SHEET 2 OF 9
PW03-0357

SHT_2.dwg 6-19-04 1:41:45 pm EST

INDEXED 8-17-04 LH

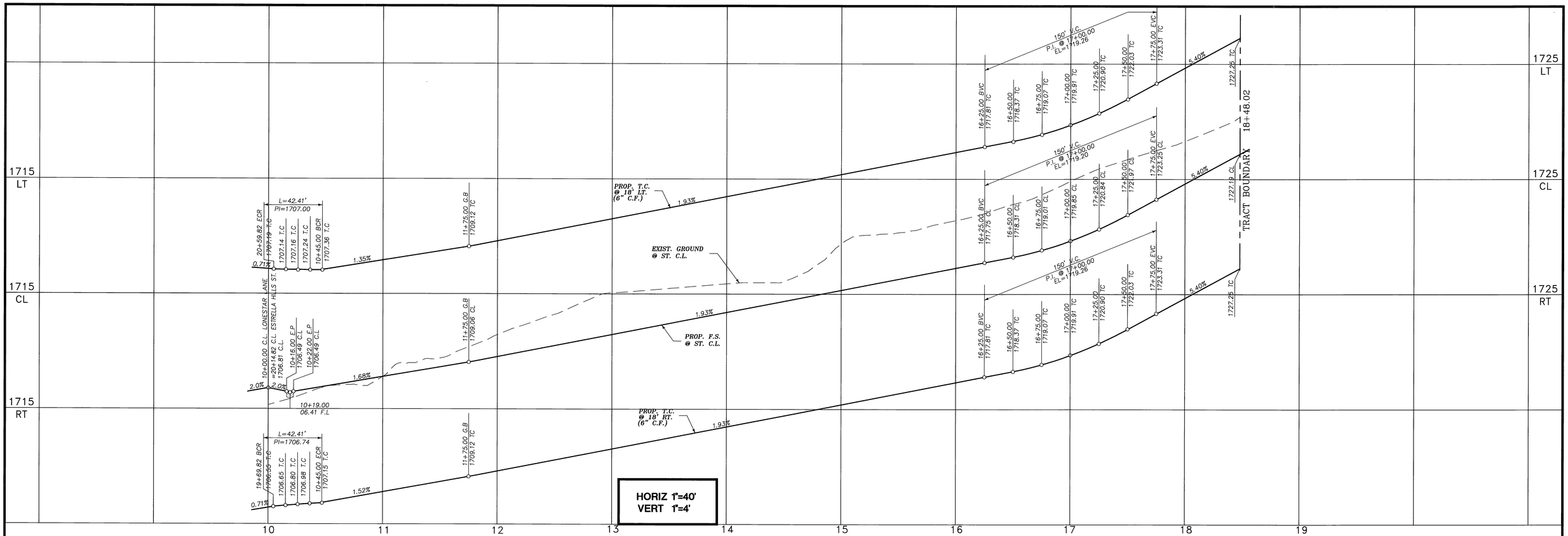

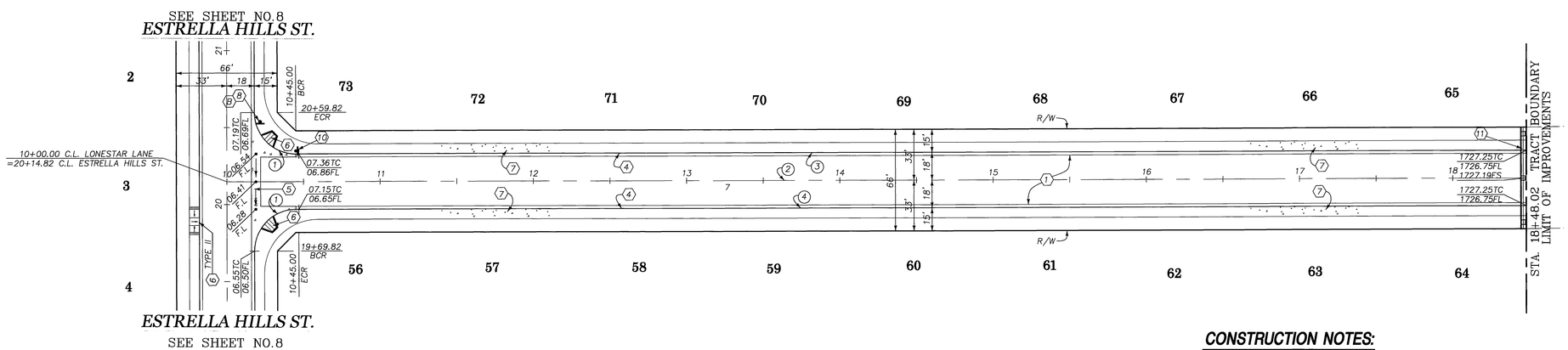

DATA TABLE

NO	DELTA/BRG	RADIUS	LENGTH	TANGENT
1	Δ=90°00'00"	27.00'	42.41'	27.00'
2	N89°43'20"E		848.02'	
3	N89°43'20"E		803.02'	
4	N89°43'20"E		803.02'	

CONSTRUCTION NOTES:

1. CONST. PAVING SECTION PER TYPICAL SECTION
4. CONST. TYPE I CURB & GUTTER (6") PER CITY OF RIVERSIDE STD. DRAWING NO 200
5. CONST. CROSS GUTTER PER CITY OF RIVERSIDE STD. DWG NO. 220 (W=6.0')
6. CONST. ACCESS RAMP PER CITY OF RIVERSIDE STD. DWG. NO 304, TYPE I
7. CONST. SIDEWALK PER CITY OF RIVERSIDE STD. DWG. NO. 325
8. INSTALL STREET NAME SIGN PER CITY OF RIVERSIDE STD. NO 662
10. INSTALL STOP SIGN (R-1)
11. CONSTRUCT BARRICADE PER CITY OF RIVERSIDE STD. NO. 180

GRAPHIC SCALE

40 0 20 40 80 120

(IN FEET)
1 inch = 40 ft.

LONESTAR LANE

Underground Service Alert

Call: TOLL FREE
1-800
227-2600

TWO WORKING DAYS BEFORE YOU DIG

NOTE: WORK CONTAINED WITHIN THESE PLANS SHALL NOT COMMENCE UNTIL AN ENCROACHMENT PERMIT AND/OR A GRADING PERMIT HAS BEEN ISSUED.

THE PRIVATE ENGINEER SIGNING THESE PLANS IS RESPONSIBLE FOR ASSURING THE ACCURACY OF DESIGN & ACCEPTABILITY OF THE WORK HEREON. IN THE EVENT OF DISCREPANCIES ARISING AFTER CITY APPROVAL OR DURING CONSTRUCTION, THE PRIVATE ENGINEER SHALL BE RESPONSIBLE FOR DETERMINING AN ACCEPTABLE SOLUTION AND REVISING THE PLANS FOR APPROVAL BY THE CITY.

DATE	BY	MARK	REVISIONS:	APPR	DATE
ENGINEER				CITY	

CITY OF RIVERSIDE, CALIFORNIA
PUBLIC WORKS DEPARTMENT

APPROVED BY:	BY:	DATE:	APPROVED BY:
PRINCIPAL ENGINEER		8/9/04	
PARK DEPARTMENT			
TRAFFIC DIVISION		8/9/04	CITY ENGINEER
STREET SERVICES		7/22/04	8/9/04 DATE

SEAL: REGISTERED PROFESSIONAL ENGINEER ROBERT T. FEDERIGHI No. 30000 Exp. 9-30-05 CIVIL STATE OF CALIFORNIA

HJK CONSULTANTS, INC.
Civil Engineering • Land Planning • Land Surveying
41769 Enterprise Circle N., #202, Temecula, Ca. 92590
Tel: (909) 719-3770 Fax: (909) 719-3780
PREPARED BY: ROBERT T. FEDERIGHI
R.C.E. NO. 30000
DATE 6/21/04

BENCHMARK:
CITY OF RIVERSIDE
ELEVATION: 1757.219 GPS-67
1-1/4' BRASS CAP IN A WELL MONUMENT, 5" DEEP IN THE CENTER OF BARTON STREET, 230 FEET SOUTHERLY OF THE INTERSECTION OF BARTON AND VAN BUREN BOULEVARD.

STREET IMPROVEMENT PLANS

TRACT NO. 30756

LONESTAR LANE

STA. 10+00.00 TO STA. 18+48.02

SCALE: HORIZ.: 1'=40' VERT.: 1'=4'

ACCOUNT NO. _____
DRAWING NUMBER
R- 3751

SHEET 3 OF 9

PW03-0357

SHT_3.dwg 6-19-04 1:52:20 pm EST

INDEXED 8-17-04 EH

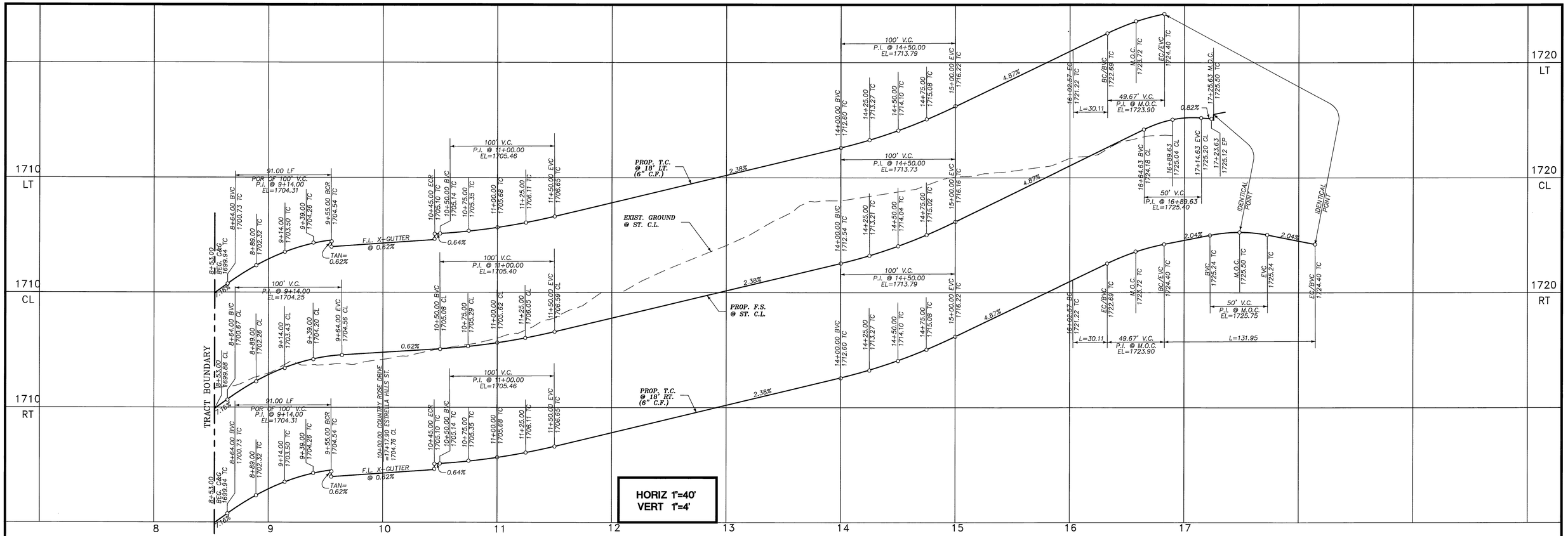

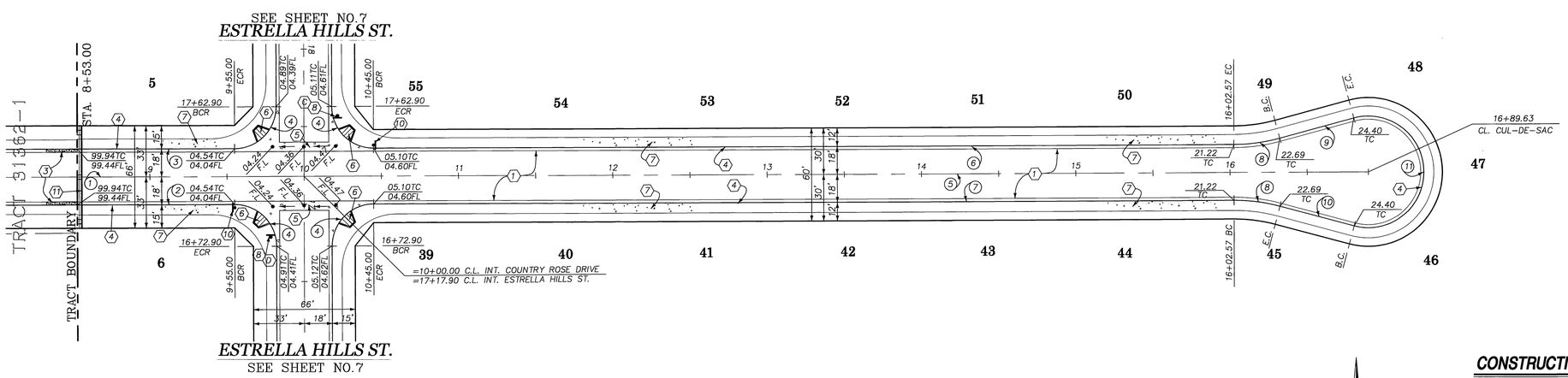

DATA TABLE

NO	DELTA/BRG	RADIUS	LENGTH	TANGENT
1	N89°43'20"E		147.00'	
2	N89°43'20"E		102.00'	
3	N89°43'20"E		102.00'	
4	Δ=90°00'00"	27.00'	42.41'	27.00'
5	N18°43'20"E		689.63'	
6	N18°43'20"E		557.57'	
7	N18°43'20"E		557.57'	
8	Δ=15°00'00"	115.00'	30.11'	15.14'
9	N74°43'20"E		49.67'	
10	N75°16'40"W		49.67'	
11	Δ=210°00'00"	36.00'	131.95'	134.35

CONSTRUCTION NOTES:

1. CONST. PAVING SECTION PER TYPICAL SECTION
3. CONST. 2' WIDE, 20' LONG, 2-1/2" THICK AC DRAINAGE APRONS @ END OF C&G
4. CONST. TYPE I CURB & GUTTER (6") PER CITY OF RIVERSIDE STD. DRAWING NO. 200
5. CONST. CROSS GUTTER PER CITY OF RIVERSIDE STD. DWG NO. 220 (W=6.0')
6. CONST. ACCESS RAMP PER CITY OF RIVERSIDE STD. DWG. NO 304, TYPE I
7. CONST. SIDEWALK PER CITY OF RIVERSIDE STD. DWG. NO. 325
8. INSTALL STREET NAME SIGN PER CITY OF RIVERSIDE STD. NO 662
10. INSTALL STOP SIGN (R-1)
11. CONST. BARRICADE PER CITY OF RIVERSIDE STD. DWG. NO. 180

COUNTRY ROSE DRIVE

GRAPHIC SCALE
40 0 20 40 80 120
(IN FEET)
1 inch = 40 ft.

Underground Service Alert
Call: TOLL FREE
1-800
227-2600
TWO WORKING DAYS BEFORE YOU DIG

NOTE: WORK CONTAINED WITHIN THESE PLANS SHALL NOT COMMENCE UNTIL AN ENCROACHMENT PERMIT AND/OR A GRADING PERMIT HAS BEEN ISSUED.

THE PRIVATE ENGINEER SIGNING THESE PLANS IS RESPONSIBLE FOR ASSURING THE ACCURACY OF DESIGN & ACCEPTABILITY OF THE WORK HEREON. IN THE EVENT OF DISCREPANCIES ARISING AFTER CITY APPROVAL OR DURING CONSTRUCTION, THE PRIVATE ENGINEER SHALL BE RESPONSIBLE FOR DETERMINING AN ACCEPTABLE SOLUTION AND REVISING THE PLANS FOR APPROVAL BY THE CITY.

DATE	BY	MARK	REVISIONS:	APPR	DATE
ENGINEER				CITY	

CITY OF RIVERSIDE, CALIFORNIA
PUBLIC WORKS DEPARTMENT

APPROVED BY:	BY:	DATE:	APPROVED BY:
PRINCIPAL ENGINEER		8/9/04	
PARK DEPARTMENT			
TRAFFIC DIVISION		8/9/04	CITY ENGINEER
			8/9/04
STREET SERVICES		7/23/04	DATE

SEAL: REGISTERED PROFESSIONAL ENGINEER ROBERT T. FEDERIGHI No. 30000 Exp. 9-30-05 CIVIL STATE OF CALIFORNIA

HK CONSULTANTS, INC.
Civil Engineering • Land Planning • Land Surveying
41769 Enterprise Circle N., #202, Temecula, Ca. 92590
Tel: (909) 719-3770 Fax: (909) 719-3780
PREPARED BY ROBERT T. FEDERIGHI
R.C.E. NO. 30000
DATE 6/21/04

BENCHMARK:
CITY OF RIVERSIDE
ELEVATION: 1757.219 GPS-67
1-1/4" BRASS CAP IN A WELL MONUMENT, 5" DEEP IN THE CENTER OF BARTON STREET, 230 FEET SOUTHERLY OF THE INTERSECTION OF BARTON AND VAN BUREN BOULEVARD.

STREET IMPROVEMENT PLANS
TRACT NO. 30756
COUNTRY ROSE DRIVE
STA. 8+53.00 TO STA. 16+89.63

ACCOUNT NO. _____
DRAWING NUMBER
R- 3751
SHEET 4 OF 9
SCALE: HORIZ.: 1'=40' VERT.: 1'=4'
PW03-0357

SHT_4.dwg 6-19-04 1:53:55 pm EST

INDEXED 8-17-04 4H

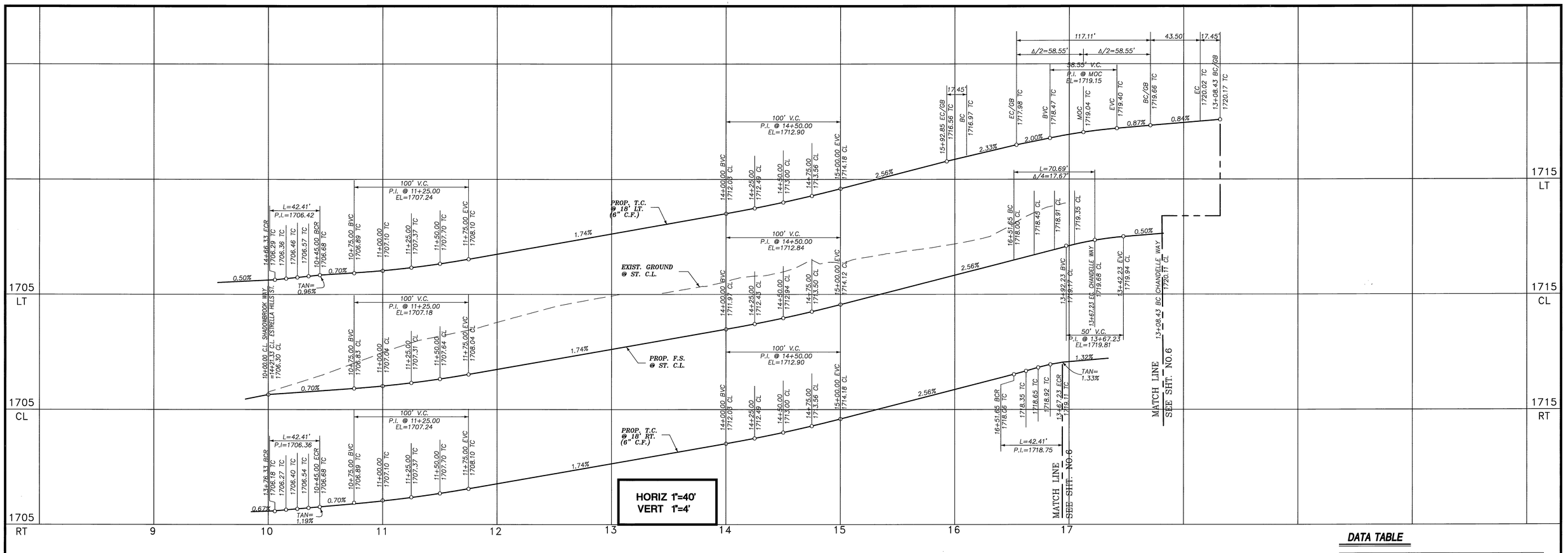

DATA TABLE

NO	DELTA/BRG	RADIUS	LENGTH	TANGENT
1	Δ=90°00'00"	27.00'	42.41'	27.00'
2	Δ=90°00'00"	27.00'	42.41'	27.00'
3	N89°43'20"E		651.65'	
4	N89°43'20"E		547.85'	
5	N89°43'20"E		606.65'	
6	Δ=10°00'00"	100.00'	17.45'	8.75'
7	N79°43'20"E		43.50'	
8	Δ=90°00'00"	45.00'	70.69'	45.00'
9	Δ=90°00'00"	27.00'	42.41'	27.00'
10	Δ=110°00'00"	61.00'	117.11'	87.12'
11	N09°43'20"E		43.50'	
12	Δ=10°00'00"	100.00'	17.45'	8.75'

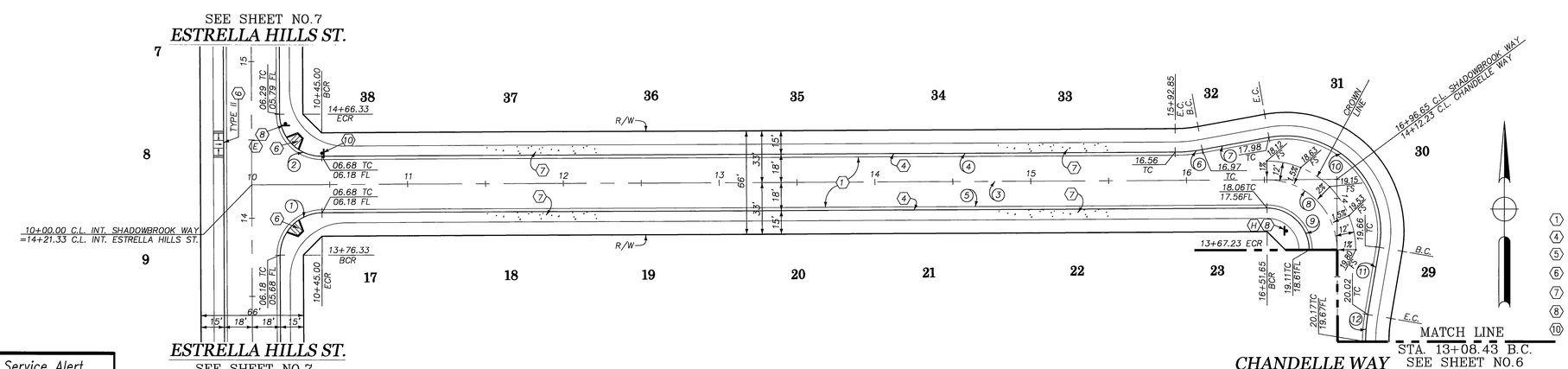

CONSTRUCTION NOTES:

1. CONST. PAVING SECTION PER TYPICAL SECTION
4. CONST. TYPE I CURB & GUTTER (6") PER CITY OF RIVERSIDE STD. DRAWING NO 200
5. CONST. CROSS GUTTER PER CITY OF RIVERSIDE STD. DWG NO. 220 (W=6.0')
6. CONST. ACCESS RAMP PER CITY OF RIVERSIDE STD. DWG. NO 304, TYPE I
7. CONST. SIDEWALK PER CITY OF RIVERSIDE STD. DWG. NO. 325
8. INSTALL STREET NAME SIGN PER CITY OF RIVERSIDE STD. NO 662
10. INSTALL STOP SIGN (R-1)

GRAPHIC SCALE

40 0 20 40 80 120

(IN FEET)
1 inch = 40 ft.

Underground Service Alert

CALL BEFORE YOU DIG

Call: TOLL FREE
1-800
227-2600

TWO WORKING DAYS BEFORE YOU DIG

NOTE: WORK CONTAINED WITHIN THESE PLANS SHALL NOT COMMENCE UNTIL AN ENCROACHMENT PERMIT AND/OR A GRADING PERMIT HAS BEEN ISSUED.

THE PRIVATE ENGINEER SIGNING THESE PLANS IS RESPONSIBLE FOR ASSURING THE ACCURACY OF DESIGN & ACCEPTABILITY OF THE WORK HEREON. IN THE EVENT OF DISCREPANCIES ARISING AFTER CITY APPROVAL OR DURING CONSTRUCTION, THE PRIVATE ENGINEER SHALL BE RESPONSIBLE FOR DETERMINING AN ACCEPTABLE SOLUTION AND REVISING THE PLANS FOR APPROVAL BY THE CITY.

DATE	BY	MARK	REVISIONS:	APPR	DATE
ENGINEER				CITY	

CITY OF RIVERSIDE, CALIFORNIA
PUBLIC WORKS DEPARTMENT

APPROVED BY:	BY:	DATE:	APPROVED BY:
PRINCIPAL ENGINEER		8/9/04	
PARK DEPARTMENT			
TRAFFIC DIVISION		8/9/04	CITY ENGINEER
STREET SERVICES		7/27/04	8/9/04 DATE

SEAL: REGISTERED PROFESSIONAL ENGINEER ROBERT T. FEDERIGHI No. 30000 Exp. 9-30-05 CIVIL STATE OF CALIFORNIA

HK CONSULTANTS, INC.
Civil Engineering • Land Planning • Land Surveying
41769 Enterprise Circle N., #202, Temecula, Ca. 92590
Tel: (909) 719-3770 Fax: (909) 719-3780

PREPARED BY: Robert T. Federighi
ROBERT T. FEDERIGHI
R.C.E. NO. 30000
DATE 6/21/04

BENCHMARK:
CITY OF RIVERSIDE
ELEVATION: 1757.219 GPS-67
1-1/4" BRASS CAP IN A WELL MONUMENT, 5" DEEP IN THE CENTER OF BARTON STREET, 230 FEET SOUTHERLY OF THE INTERSECTION OF BARTON AND VAN BUREN BOULEVARD.

STREET IMPROVEMENT PLANS

TRACT NO. 30756

SHADOWBROOK WAY

STA. 10+00.00 TO STA. 16+96.65

SCALE: HORIZ.: 1'=40' VERT.: 1'=4'

ACCOUNT NO. _____
DRAWING NUMBER
R- 3751
SHEET 5 OF 9
PW03-0357

SHT_5.dwg 6-19-04 2:00:12 pm EST

INDEXED 8-17-04 KH

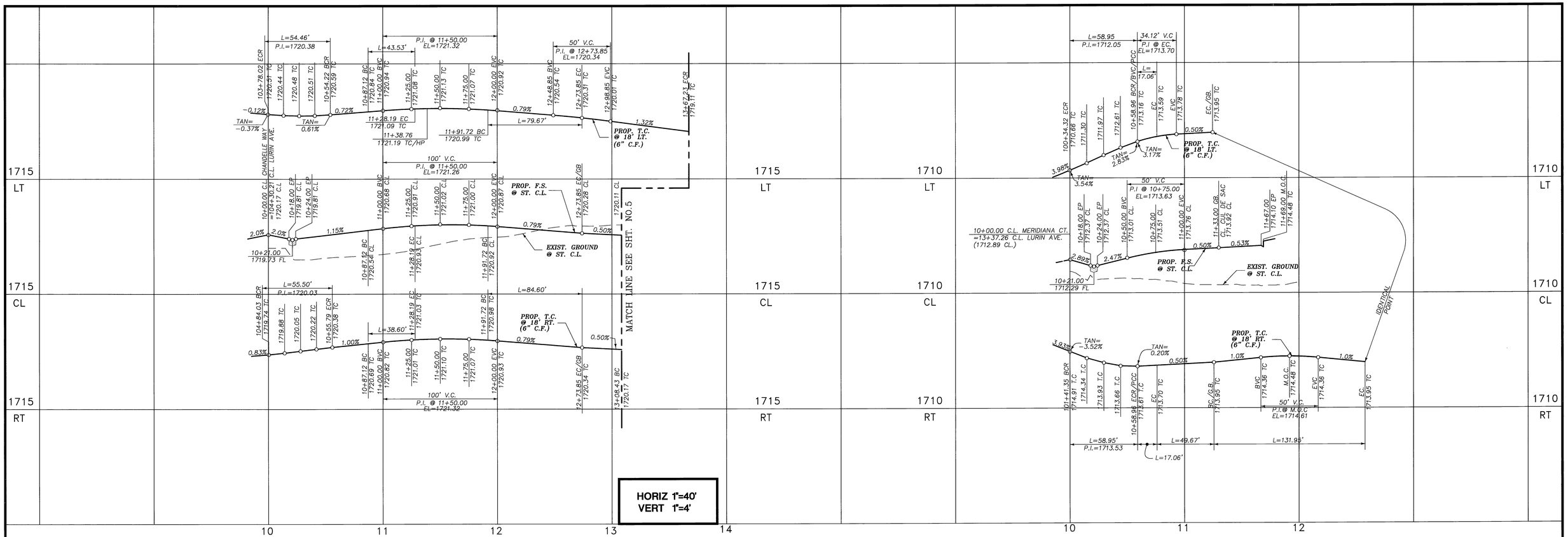

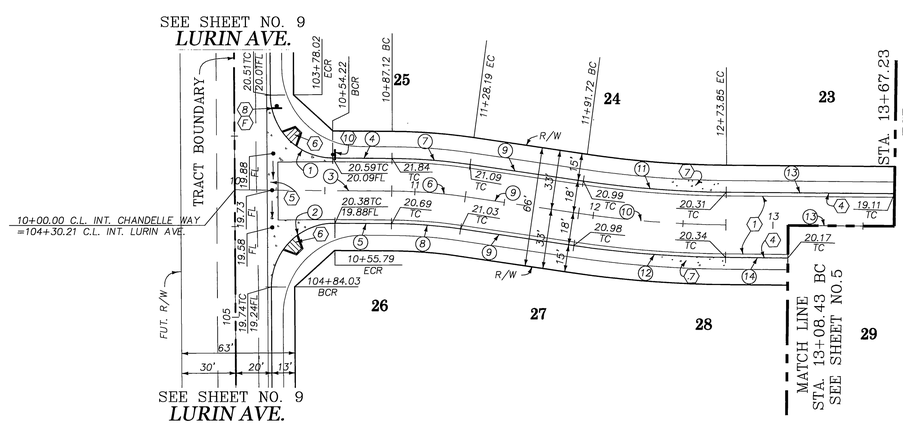

CONSTRUCTION NOTES:

1. CONST. PAVING SECTION PER TYPICAL SECTION
4. CONST. TYPE I CURB & GUTTER (6") PER CITY OF RIVERSIDE STD. DRAWING NO 200
5. CONST. CROSS GUTTER PER CITY OF RIVERSIDE STD. DWG NO. 220 (W=6.0')
6. CONST. ACCESS RAMP PER CITY OF RIVERSIDE STD. DWG. NO 304, TYPE I
7. CONST. SIDEWALK PER CITY OF RIVERSIDE STD. DWG. NO. 325
8. INSTALL STREET NAME SIGN PER CITY OF RIVERSIDE STD. NO 662
10. INSTALL STOP SIGN (R-1)

DATA TABLE

NO	DELTA/BRG	RADIUS	LENGTH	TANGENT
1	Δ=89°09'03"	35.00'	54.46'	34.49'
2	Δ=90°50'57"	35.00'	55.50'	35.52'
3	N00°16'40"W		87.12'	
4	N00°16'40"W		32.90'	
5	N00°16'40"W		31.33'	
6	Δ=07°50'35"	300.00'	41.07'	20.57'
7	Δ=07°50'35"	318.00'	43.53'	21.80'
8	Δ=07°50'35"	282.00'	38.60'	19.33'
9	N07°33'55"E		63.53'	
10	Δ=07°50'35"	600.00'	82.13'	41.13'
11	Δ=07°50'35"	582.00'	79.67'	39.90'
12	Δ=07°50'35"	618.00'	84.60'	42.36'
13	N00°16'40"W		93.38'	
14	N00°16'40"W		34.58'	

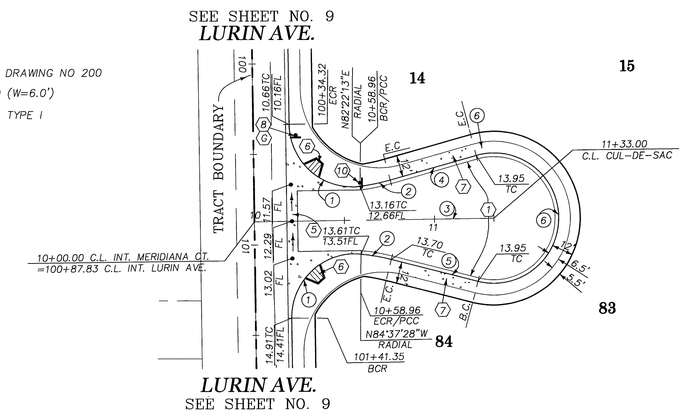

DATA TABLE

NO	DELTA/BRG	RADIUS	LENGTH	TANGENT
1	Δ=96°30'10"	35.00'	58.95'	39.22'
2	Δ=08°29'50"	115.00'	17.06'	8.54'
3	N01°07'37"W		133.00'	
4	N16°07'37"W		49.67'	
5	N13°52'23"W		49.67'	
6	Δ=210°00'05"	36.00'	131.95'	

GRAPHIC SCALE
40 0 20 40 80 120
(IN FEET)
1 inch = 40 ft.

Underground Service Alert
CALL BEFORE YOU DIG
Call: TOLL FREE
1-800
227-2600
TWO WORKING DAYS BEFORE YOU DIG

NOTE: WORK CONTAINED WITHIN THESE PLANS SHALL NOT COMMENCE UNTIL AN ENCROACHMENT PERMIT AND/OR A GRADING PERMIT HAS BEEN ISSUED.

THE PRIVATE ENGINEER SIGNING THESE PLANS IS RESPONSIBLE FOR ASSURING THE ACCURACY OF DESIGN & ACCEPTABILITY OF THE WORK HEREON. IN THE EVENT OF DISCREPANCIES ARISING AFTER CITY APPROVAL OR DURING CONSTRUCTION, THE PRIVATE ENGINEER SHALL BE RESPONSIBLE FOR DETERMINING AN ACCEPTABLE SOLUTION AND REVISING THE PLANS FOR APPROVAL BY THE CITY.

DATE	BY	MARK	REVISIONS:	APPR	DATE
ENGINEER				CITY	

CITY OF RIVERSIDE, CALIFORNIA
PUBLIC WORKS DEPARTMENT

APPROVED BY:	BY:	DATE:	APPROVED BY:
PRINCIPAL ENGINEER		8/9/04	
PARK DEPARTMENT			
TRAFFIC DIVISION		8/9/04	CITY ENGINEER
STREET SERVICES		7/27/04	8/9/04 DATE

SEAL: REGISTERED PROFESSIONAL ENGINEER ROBERT T. FEDERIGHI No. 30000 Exp. 9-30-05 CIVIL STATE OF CALIFORNIA

HK CONSULTANTS, INC.
Civil Engineering • Land Planning • Land Surveying
41769 Enterprise Circle N., #202, Temecula , Ca. 92590
Tel: (909) 719-3770 Fax: (909) 719-3780

PREPARED BY: ROBERT T. FEDERIGHI
R.C.E. NO. 30000
DATE 6/21/04

BENCHMARK:
CITY OF RIVERSIDE
ELEVATION: 1757.219 GPS-67
1-1/4' BRASS CAP IN A WELL MONUMENT, 5" DEEP IN THE CENTER OF BARTON STREET, 230 FEET SOUTHERLY OF THE INTERSECTION OF BARTON AND VAN BUREN BOULEVARD.

STREET IMPROVEMENT PLANS
TRACT NO. 30756
CHANDELLE WAY
STA. 10+00.00 TO STA. 13+67.23
MERIDIANA COURT
STA. 10+00.00 TO STA. 11+33.00
SCALE: HORIZ.: 1'=40' VERT.: 1'=4'

ACCOUNT NO. _____
DRAWING NUMBER
R- 3751
SHEET 6 OF 9
PW03-0357

INDEXED 8-17-04 GH

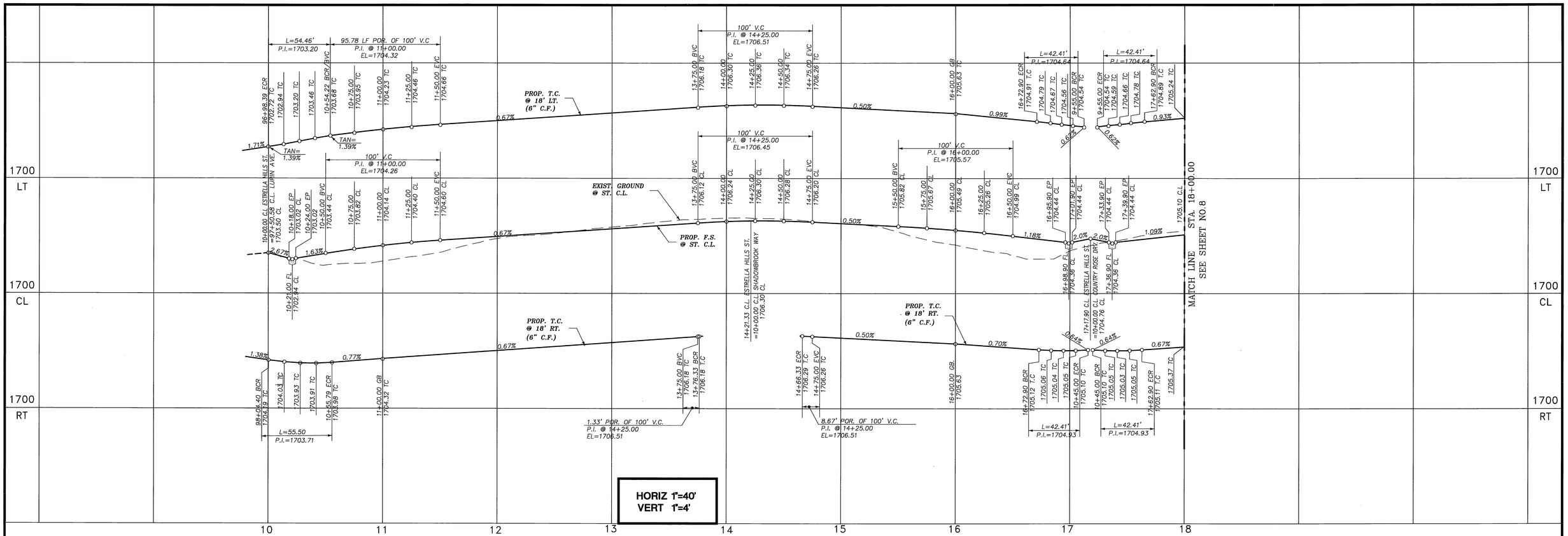

HORIZ 1"=40'
VERT 1"=4'

DATA TABLE

NO	DELTA/BRG	RADIUS	LENGTH	TANGENT
1	Δ=89°09'03"	35.00'	54.46'	34.49'
2	Δ=90°50'57"	35.00'	55.50'	35.52'
3	N00°16'40"W		320.54'	
4	N00°16'40"W		618.68'	
5	N00°16'40"W		624.59'	
6	Δ=90°00'00"	27.00'	42.41'	27.00'
7	N00°16'40"W		296.57'	
8	N00°16'40"W		204.57'	
9	Δ=90°00'00"	27.00'	42.41'	27.00'
10	N00°16'40"W		82.10'	
11	N00°16'40"W		35.10'	

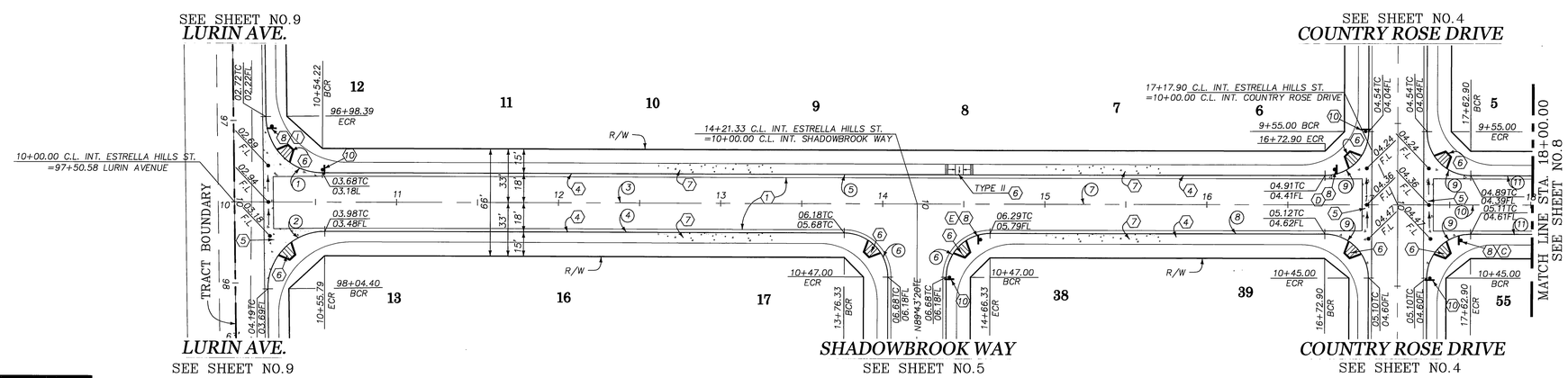

CONSTRUCTION NOTES:

1. CONST. PAVING SECTION PER TYPICAL SECTION
4. CONST. TYPE I CURB & GUTTER (6") PER CITY OF RIVERSIDE STD. DRAWING NO 200
5. CONST. CROSS GUTTER PER CITY OF RIVERSIDE STD. DWG NO. 220 (W=6.0')
6. CONST. ACCESS RAMP PER CITY OF RIVERSIDE STD. DWG. NO 304, TYPE I
7. CONST. SIDEWALK PER CITY OF RIVERSIDE STD. DWG. NO. 325
8. INSTALL STREET NAME SIGN PER CITY OF RIVERSIDE STD. NO 662
10. INSTALL STOP SIGN (R-1)

GRAPHIC SCALE

40 0 20 40 80 120

(IN FEET)
1 inch = 40 ft.

ESTRELLA HILLS STREET

Underground Service Alert

Call: TOLL FREE
1-800
227-2600

TWO WORKING DAYS BEFORE YOU DIG

NOTE: WORK CONTAINED WITHIN THESE PLANS SHALL NOT COMMENCE UNTIL AN ENCROACHMENT PERMIT AND/OR A GRADING PERMIT HAS BEEN ISSUED.

THE PRIVATE ENGINEER SIGNING THESE PLANS IS RESPONSIBLE FOR ASSURING THE ACCURACY OF DESIGN & ACCEPTABILITY OF THE WORK HEREON. IN THE EVENT OF DISCREPANCIES ARISING AFTER CITY APPROVAL OR DURING CONSTRUCTION, THE PRIVATE ENGINEER SHALL BE RESPONSIBLE FOR DETERMINING AN ACCEPTABLE SOLUTION AND REVISING THE PLANS FOR APPROVAL BY THE CITY.

DATE	BY	MARK	REVISIONS:	APPR	DATE
ENGINEER				CITY	

CITY OF RIVERSIDE, CALIFORNIA
PUBLIC WORKS DEPARTMENT

APPROVED BY:	BY:	DATE:	APPROVED BY:
PRINCIPAL ENGINEER		8/9/04	
PARK DEPARTMENT			
TRAFFIC DIVISION		8/9/04	
STREET SERVICES		7/22/04	CITY ENGINEER 8/9/04 DATE

SEAL: REGISTERED PROFESSIONAL ENGINEER ROBERT T. FEDERIGHI No. 30000 Exp. 9-30-05 CIVIL STATE OF CALIFORNIA

HK CONSULTANTS, INC.
Civil Engineering • Land Planning • Land Surveying
41769 Enterprise Circle N., #202, Temecula, Ca. 92590
Tel: (909) 719-3770 Fax: (909) 719-3780

PREPARED BY: Robert T. Federighi
ROBERT T. FEDERIGHI
R.C.E. NO. 30000
DATE 6/21/04

BENCHMARK:
CITY OF RIVERSIDE
ELEVATION: 1757.219 GPS-67
1-1/4' BRASS CAP IN A WELL MONUMENT, 5" DEEP IN THE CENTER OF BARTON STREET, 230 FEET SOUTHERLY OF THE INTERSECTION OF BARTON AND VAN BUREN BOULEVARD.

STREET IMPROVEMENT PLANS

TRACT NO. 30756
ESTRELLA HILLS STREET
STA. 10+00.00 TO STA. 18+00.00

SCALE: HORIZ.: 1'=40' VERT.: 1'=4'

ACCOUNT NO. _____
DRAWING NUMBER
R- 3751
SHEET 7 OF 9
PW03-0357

INDEXED 8-17-04 GH

SHT_7.dwg 6-19-04 2:15:36 pm EST

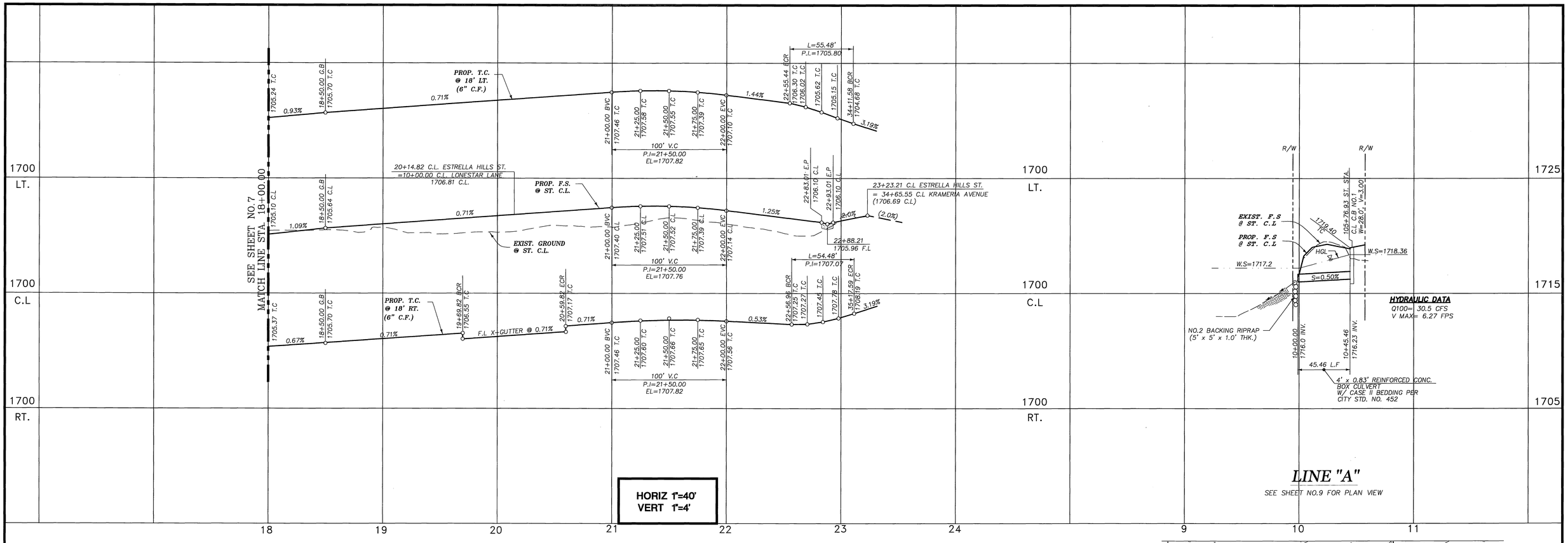

DATA TABLE

NO	DELTA/BRG	RADIUS	LENGTH	TANGENT
1	N00°16'40"W		214.82'	
2	N00°16'40"W		169.82'	
3	N00°16'40"W		455.41'	
4	Δ=90°00'00"	27.00'	42.41'	27.00'
5	N00°16'40"W		308.39'	
6	N00°16'40"W		197.17'	
7	Δ=90°49'19"	35.00'	55.48'	35.51'
8	Δ=89°10'41"	35.00'	54.48'	34.50'

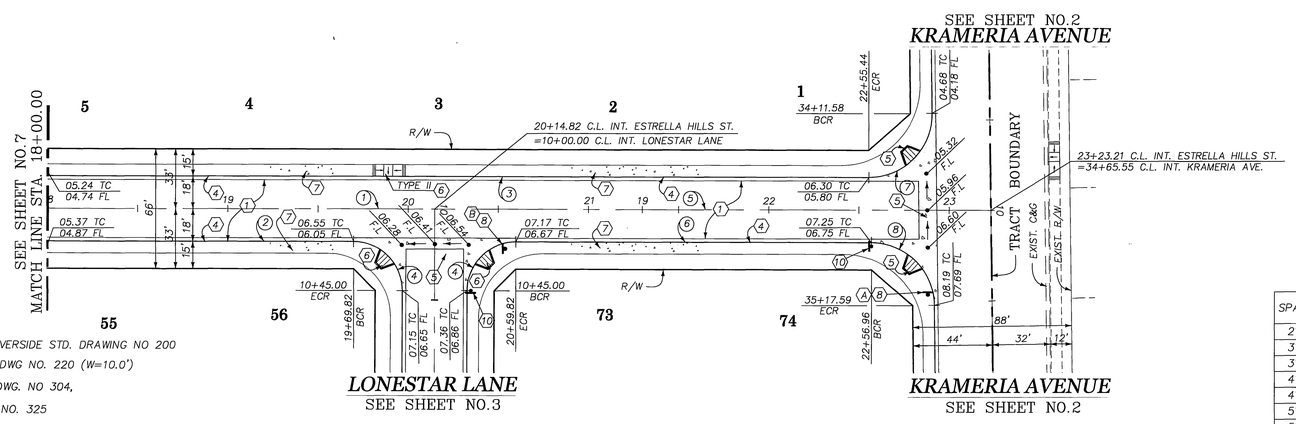

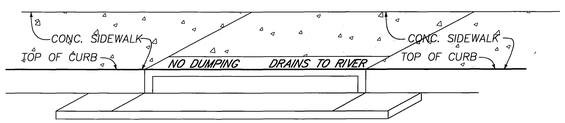

CATCH BASIN STENCILING DETAIL

N.T.S.

(SEE SHEET 9 OF 9)

- (A) STENCILS TO HAVE 2" LETTERS AS FOLLOWS: NO DUMPING, DRAINS TO RIVER
- (B) PLACE BOTH STENCILS CENTERED WITHIN THE CATCH BASIN OPENING AND WITHIN THE TOP OF CURB
- (C) SPRAY BOTH STENCILS WITH WHITE PAINT
- (D) REMOVE STENCILS WHEN PAINT IS DRY.

CONSTRUCTION NOTES:

- (1) CONST. PAVING SECTION PER TYPICAL SECTION
- (4) CONST. TYPE I CURB & GUTTER (6") PER CITY OF RIVERSIDE STD. DRAWING NO 200
- (5) CONST. CROSS GUTTER PER CITY OF RIVERSIDE STD. DWG NO. 220 (W=10.0')
- (6) CONST. ACCESS RAMP PER CITY OF RIVERSIDE STD. DWG. NO 304,
- (7) CONST. SIDEWALK PER CITY OF RIVERSIDE STD. DWG. NO. 325
- (8) INSTALL STREET NAME SIGN PER CITY OF RIVERSIDE STD. NO 662A/662 AS APPLICABLE
- (10) INSTALL STOP SIGN (R-1)

STANDARD REINFORCING

SPAN (S)	A-BARS			
	SIZE	CTR'S	L	LENGTH
2'-6"	#5	7 1/2"	3'-8"	5'-3"
3'-0"	#5	6 1/2"	4'-2"	5'-9"
3'-6"	#5	6"	4'-8"	6'-3"
4'-0"	#5	5 1/2"	5'-2"	6'-9"
4'-6"	#5	5"	5'-8"	7'-3"
5'-0"	#5	5"	6'-2"	7'-9"
5'-6"	#5	4 1/2"	6'-8"	8'-3"
6'-0"	#5	4"	7'-2"	8'-9"

QUANTITIES PER 10FT. LENGTH

SPAN (S)	CONCRETE CY FOR VARYING DEPTHS (V)								STEEL POUNDS
	8"	9"	10"	11"	12"	14"	16"	18"	
2'-6"	2.48	2.52	2.56	2.60	2.64	2.72	2.80	2.88	270
3'-0"	2.76	2.80	2.84	2.88	2.92	3.00	3.08	3.16	332
3'-6"	3.05	3.09	3.13	3.17	3.21	3.29	3.37	3.45	378
4'-0"	3.32	3.36	3.40	3.44	3.48	3.56	3.64	3.73	435
4'-6"	3.60	3.64	3.68	3.72	3.76	3.84	3.92	4.01	503
5'-0"	3.88	3.92	3.96	4.00	4.04	4.12	4.20	4.28	550
5'-6"	4.16	4.20	4.24	4.28	4.32	4.40	4.48	4.56	611
6'-0"	4.44	4.48	4.52	4.56	4.60	4.68	4.76	4.84	733

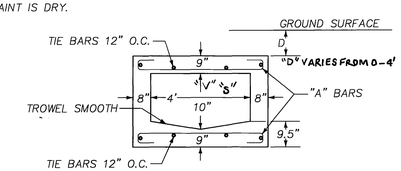

TYPICAL SECTION

CITY OF RANCHO CUCAMONGA

REINFORCED CONCRETE BOX CULVERT NO. 1

STANDARD # 314

N.T.S.

SEE SHEET 9 OF 9

1. ALL BARS SHALL BE ROUND AND DEFORMED AND SHALL BE LAPPED 20 DIAMETERS AT ALL SPLICES.
2. TIE BARS TO BE #5.
3. DIMENSIONS "S" AND "V" ARE SPECIFIED ON PLAN.
4. BARS SHALL BE COVERED AT ALL PARTS WITH 1" OF CONCRETE UNLESS OTHERWISE SPECIFIED HEREON.
5. FORM SURFACE (SF PER FT) = S+4V+2.92 ("S" IN FEET, "V" IN INCHES)
6. CONCRETE SHALL BE CLASS B, MINIMUM 3250 PSI

RIV. CO. NUMBER MS3939, IP040014

GRAPHIC SCALE

40 0 20 40 80 120

(IN FEET)
1 inch = 40 ft.

Underground Service Alert

CALL BEFORE YOU DIG

Call: TOLL FREE
1-800
227-2600

TWO WORKING DAYS BEFORE YOU DIG

SEAL: REGISTERED PROFESSIONAL ENGINEER — KHALED A. OTHMAN — No. 33950 — Exp. 6-30-06 — CIVIL — STATE OF CALIFORNIA

APPROVED FOR CONSTRUCTION WITHIN THE COUNTY OF RIVERSIDE ONLY

COUNTY OF RIVERSIDE
TRANSPORTATION DEPARTMENT

APPROVED BY:

KHALED A. OTHMAN R.C.E. 33950 — DATE 7/19/04

RECOMMENDED: WILLDAN — DATE 7/15/04

NOTE: WORK CONTAINED WITHIN THESE PLANS SHALL NOT COMMENCE, UNTIL AN ENCROACHMENT PERMIT AND/OR A GRADING PERMIT HAS BEEN ISSUED.

THE PRIVATE ENGINEER SIGNING THESE PLANS IS RESPONSIBLE FOR ASSURING THE ACCURACY OF DESIGN & ACCEPTABILITY OF THE WORK HEREON. IN THE EVENT OF DISCREPANCIES ARISING AFTER CITY APPROVAL OR DURING CONSTRUCTION, THE PRIVATE ENGINEER SHALL BE RESPONSIBLE FOR DETERMINING AN ACCEPTABLE SOLUTION AND REVISING THE PLANS FOR APPROVAL BY THE CITY.

DATE	BY	MARK	REVISIONS:	APPR	DATE
ENGINEER				CITY	

CITY OF RIVERSIDE, CALIFORNIA
PUBLIC WORKS DEPARTMENT

APPROVED BY:	BY:	DATE:	APPROVED BY:
PRINCIPAL ENGINEER	PH	8/9/04	
PARK DEPARTMENT			
TRAFFIC DIVISION		8/9/04	CITY ENGINEER 8/9/04
STREET SERVICES		7/26/04	DATE

SEAL: REGISTERED PROFESSIONAL ENGINEER — ROBERT T. FEDERIGHI — No. 30000 — Exp. 9-30-05 — CIVIL — STATE OF CALIFORNIA

HK CONSULTANTS, INC.
Civil Engineering • Land Planning • Land Surveying
41769 Enterprise Circle N., #202, Temecula, Ca. 92590
Tel: (909) 719-3770 Fax: (909) 719-3780

PREPARED BY: ROBERT T. FEDERIGHI — R.C.E. NO. 30000 — DATE 6/21/04

BENCHMARK:

CITY OF RIVERSIDE
ELEVATION: 1757.219 GPS-67

1-1/4' BRASS CAP IN A WELL MONUMENT, 5" DEEP IN THE CENTER OF BARTON STREET, 230 FEET SOUTHERLY OF THE INTERSECTION OF BARTON AND VAN BUREN BOULEVARD.

STREET IMPROVEMENT PLANS
RIV. CO. MS3939, IP040014

TRACT NO. 30756

ESTRELLA HILLS STREET

STA. 18+00.00 TO STA. 23+23.21

ACCOUNT NO. _____
DRAWING NUMBER
R- 3751

SHEET 8 OF 9

SCALE: HORIZ.: 1'=40' VERT.: 1'=4'

PW03-0357

SHT_8.dwg 6-19-04 2:16:19 pm EST

INDEXED 8-17-04 KH

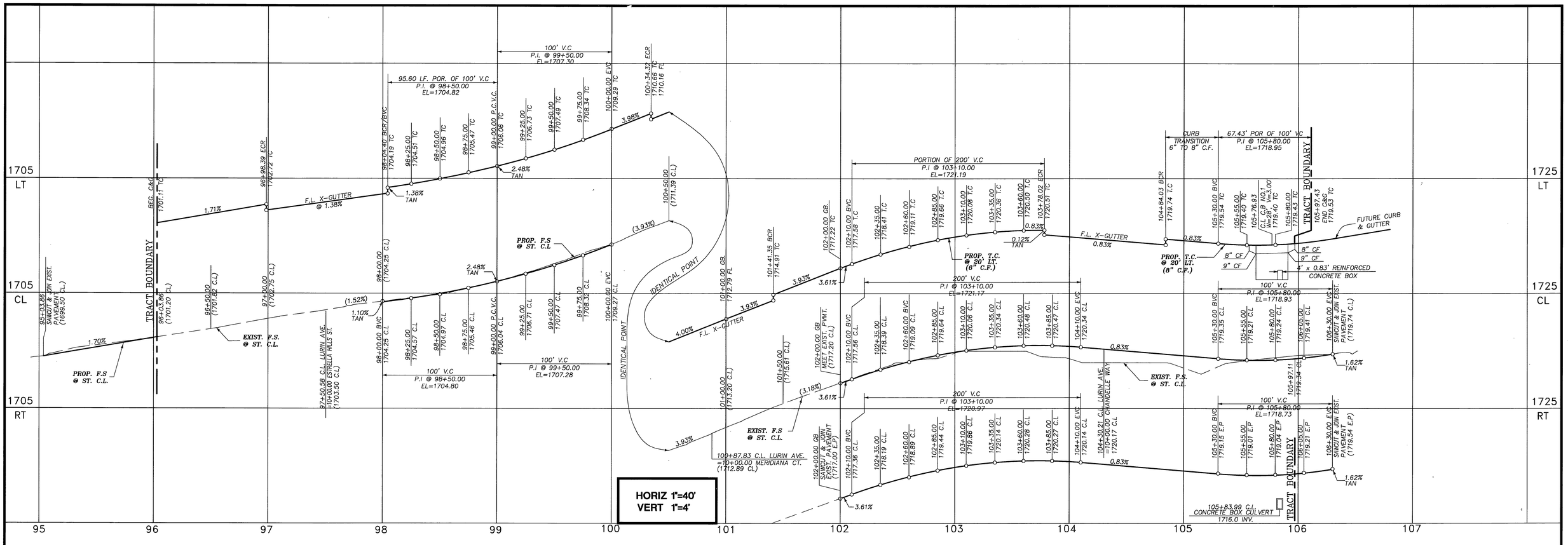

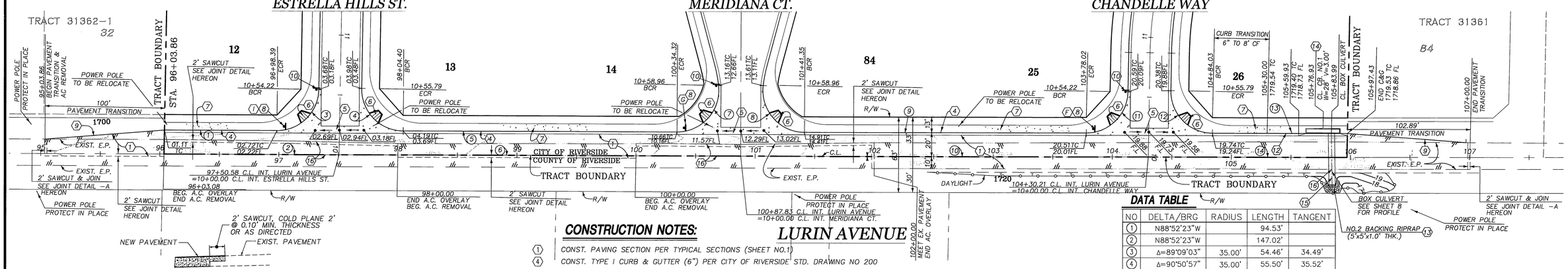

JOINT DETAIL – A

N.T.S.

CONSTRUCTION NOTES:

1. CONST. PAVING SECTION PER TYPICAL SECTIONS (SHEET NO.1)
4. CONST. TYPE I CURB & GUTTER (6") PER CITY OF RIVERSIDE STD. DRAWING NO 200
5. CONST. CROSS GUTTER PER CITY OF RIVERSIDE STD. DWG NO. 220 (W=6.0')
6. CONST. ACCESS RAMP PER CITY OF RIVERSIDE STD. DWG. NO 304, TYPE I
7. CONST. SIDEWALK PER CITY OF RIVERSIDE STD. DWG. NO. 325
8. INSTALL STREET NAME SIGN PER CITY OF RIVERSIDE STD. NO 662
9. CONSTRUCT A.C. BERM, TYPE I, PER CITY OF RIVERSIDE STD. NO. 250
10. INSTALL STOP SIGN (R-1)
12. CONST. TYPE II CURB & GUTTER (8") PER CITY OF RIVERSIDE STD. DRAWING NO 200
13. INSTALL RIPRAP (SIZES AS PER PLAN)
14. CONSTRUCT CATCH BASIN, PER CITY OF RIVERSIDE STD. DWG. NO.405
15. CONSTRUCT REINFORCED CONCRETE NO.1 PER CITY OF RANCHO CUCAMONGA STD. # 314; S=4.00' – V=0.83'
16. CONSTRUCT A.C. OVERLAY

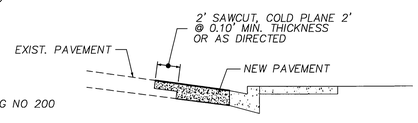

JOINT DETAIL

N.T.S.

DATA TABLE

NO	DELTA/BRG	RADIUS	LENGTH	TANGENT
1	N88°52'23"W		94.53'	
2	N88°52'23"W		147.02'	
3	Δ=89°09'03"	35.00'	54.46'	34.49'
4	Δ=90°50'57"	35.00'	55.50'	35.52'
5	N88°52'23"E		229.92'	
6	N88°52'23"E		337.26'	
7	Δ=96°30'10"	35.00'	58.95'	39.22'
8	Δ=96°30'10"	35.00'	58.95'	39.92'
9	N88°52'23"E		236.68'	
10	N88°52'23"E		342.38'	
11	Δ=89°09'03"	35.00'	54.46'	34.49'
12	Δ=90°50'57"	35.00'	55.50'	35.52'
13	N88°52'23"E		113.40'	
14	N88°52'23"E		166.89'	
15	N02°04'16"W		44.45'	

NO	DELTA/BRG	RADIUS	LENGTH	TANGENT
16	N02°04'48"E		45.46'	

GRAPHIC SCALE

40 0 20 40 80 120

(IN FEET)
1 inch = 40 ft.

RIV. CO. NUMBER MS3939, IP040014

Underground Service Alert

CALL BEFORE YOU DIG

Call: TOLL FREE
1-800
227-2600

TWO WORKING DAYS BEFORE YOU DIG

SEAL: REGISTERED PROFESSIONAL ENGINEER KHALED A. OTHMAN No. 33950 Exp. 6-30-06 CIVIL STATE OF CALIFORNIA

COUNTY OF RIVERSIDE
TRANSPORTATION DEPARTMENT

APPROVED BY: 7/19/04
KHALED A. OTHMAN, R.C.E. 33950 DATE

RECOMMENDED: WILLDAN 7/15/04
DATE

APPROVED FOR CONSTRUCTION WITHIN THE COUNTY OF RIVERSIDE ONLY

NOTE: WORK CONTAINED WITHIN THESE PLANS SHALL NOT COMMENCE UNTIL AN ENCROACHMENT PERMIT AND/OR A GRADING PERMIT HAS BEEN ISSUED.

THE PRIVATE ENGINEER SIGNING THESE PLANS IS RESPONSIBLE FOR ASSURING THE ACCURACY OF DESIGN & ACCEPTABILITY OF THE WORK HEREON. IN THE EVENT OF DISCREPANCIES ARISING AFTER CITY APPROVAL OR DURING CONSTRUCTION, THE PRIVATE ENGINEER SHALL BE RESPONSIBLE FOR DETERMINING AN ACCEPTABLE SOLUTION AND REVISING THE PLANS FOR APPROVAL BY THE CITY.

DATE	BY	MARK	REVISIONS:	APPR	DATE
ENGINEER				CITY	

CITY OF RIVERSIDE, CALIFORNIA
PUBLIC WORKS DEPARTMENT

APPROVED BY:	BY:	DATE:	APPROVED BY:
PRINCIPAL ENGINEER	DH	8/9/04	
PARK DEPARTMENT			
TRAFFIC DIVISION		8/9/04	CITY ENGINEER 8/9/04 DATE
STREET SERVICES		7/26/04	

SEAL: REGISTERED PROFESSIONAL ENGINEER ROBERT T. FEDERIGHI No. 30000 Exp. 9-30-05 CIVIL STATE OF CALIFORNIA

HK CONSULTANTS, INC.
Civil Engineering • Land Planning • Land Surveying
41769 Enterprise Circle N., #202, Temecula, Ca. 92590
Tel: (909) 719-3770 Fax: (909) 719-3780

PREPARED BY: ROBERT T. FEDERIGHI R.C.E. NO. 30000 DATE 6/21/04

BENCHMARK:
CITY OF RIVERSIDE
ELEVATION: 1757.219 GPS-67
1-1/4' BRASS CAP IN A WELL MONUMENT, 5" DEEP IN THE CENTER OF BARTON STREET, 230 FEET SOUTHERLY OF THE INTERSECTION OF BARTON AND VAN BUREN BOULEVARD.

STREET IMPROVEMENT PLANS
RIV. CO. MS3939, IP040014
TRACT NO. 30756
LURIN AVENUE
STA. 95+03.86 TO STA. 107+00.00

SCALE: HORIZ.: 1'=40' VERT.: 1'=4'

ACCOUNT NO. _____
DRAWING NUMBER
R- 3751

SHEET 9 OF 9

PW03-0357

INDEXED 8-17-04 FH

SHT_9.dwg 6-19-04 2:36:03 pm EST