## GENERAL NOTES

1. It shall be the responsibility of the contractor to clear the right of way in accordance with the provisions of law as it affects each utility including irrigation lines and appurtenances and at no cost to the City.
2. Construction shall be in accordance with the City of Riverside Dept. of Public Works, Standard Drawings, its Supplemental Notes, and the Standard Specifications for Public Works Construction, Current Edition.
3. Trim edge of existing pavement where new pavement joins to a smooth, straight line. Construct match-up paving as shown on plan and overlay paving as directed in the field to produce a smooth section.
4. Construct driveway approaches per Std. Dwg. 302. Exact size and location to be staked by the Private Engineer prior to construction of the curb and gutter and as approved by the Traffic Engineer.
5. The developer and/or contractor shall contact the street division (351-6127) to pick up any existing standard 180 barricades that are being removed. The City's inspector will make the final determination on whether a barricade can be relocated.
6. The subdivider shall arrange for a soil test to be made by a soils engineer after the streets have been prepared to rough grade and prior to curb and gutter construction. Depth of base material and A.C. paving shall be determined by the City of Riverside design standards and test procedures.
7. All flagged elevations shall be staked in the field by the private engineer.
8. The private engineer signing these plans is responsible for assuring the accuracy and acceptability of the work hereon. In the event of discrepancies arising during construction, the private engineer shall be responsible for determining an acceptable solution and revising the plans for approval by the City.
9. The developer shall be responsible for preserving or re-establishing and referencing survey monuments destroyed, disturbed or buried as a result of construction shown hereon.
10. On all areas within public right of way where the fill is one (1) foot or greater, a letter will be required from the soils engineer, certifying the compaction of the fill below subgrade, prior to issuance of the Construction Permit/Cut Sheets.
11. All traffic signs shall be installed prior to opening the streets to traffic.
12. See City of Riverside Public Utilities Approved DWG UOL5-604745 for quantity & location of required Street Lights.
13. Notice to contractor. The existence and location of any underground utility pipes or structures shown on these plans were obtained by a search of the available records. To the best of our knowledge there are no existing utilities except as shown on these plans. The contractor is required to take precautionary measures to protect the utility lines shown and any other lines not of record or not shown on these plans.
14. Contractor agrees that he shall assume sole and complete responsibility for job site conditions during the course of construction of this project, including safety of all persons and property; that this requirement shall apply continuously and not be limited to normal working hours; and that the contractor shall defend, indemnify and hold the owner and the engineer harmless from any and all liability, real or alleged, in connection with the performance of work on this project, excepting for liability arising from the sole negligence of the owner or engineer.
15. Any traffic control striping obliterated and/or badly worn during construction shall be restored by the contractor within five days after notification from the City Inspectors.
16. The contractor shall call in a location request to Underground Service Alert (USA), Phone No. 1-800-227-2600, two working days before digging. No construction permit will be issued by the Public Works Department involving excavation for underground facilities unless the applicant has been provided an inquiry identification number by U.S.A.
17. Quantities shown are for information only and the City of Riverside is not responsible for their accuracy.
18. In pavement overlay areas, distressed existing pavement shall be removed and replaced as directed by the inspector prior to overlaying with A.C. paving.
19. The contractor shall coordinate trenching for cable television with other trenching within the project.
20. Final striping for traffic control and/or pavement marking to be the responsibility of the developer.
21. No person shall perform any construction activity or install any objects within the public right-of-way or easements of the City of Riverside without a valid Construction Permit or, a Street Opening Permit or an Encroachment Permit issued by the City's Public Works Department.
22. Contact the Public Utilities Electric Department ninety (90) days prior to construction to allow the department to prepare Electric Utility Relocation & Design Plans for Bidding & Construction purposes. Contact Julian Cardenas @ (909) 826-5937.

IN THE CITY OF RIVERSIDE, CALIFORNIA

# PM 33375

# STREET PLAN

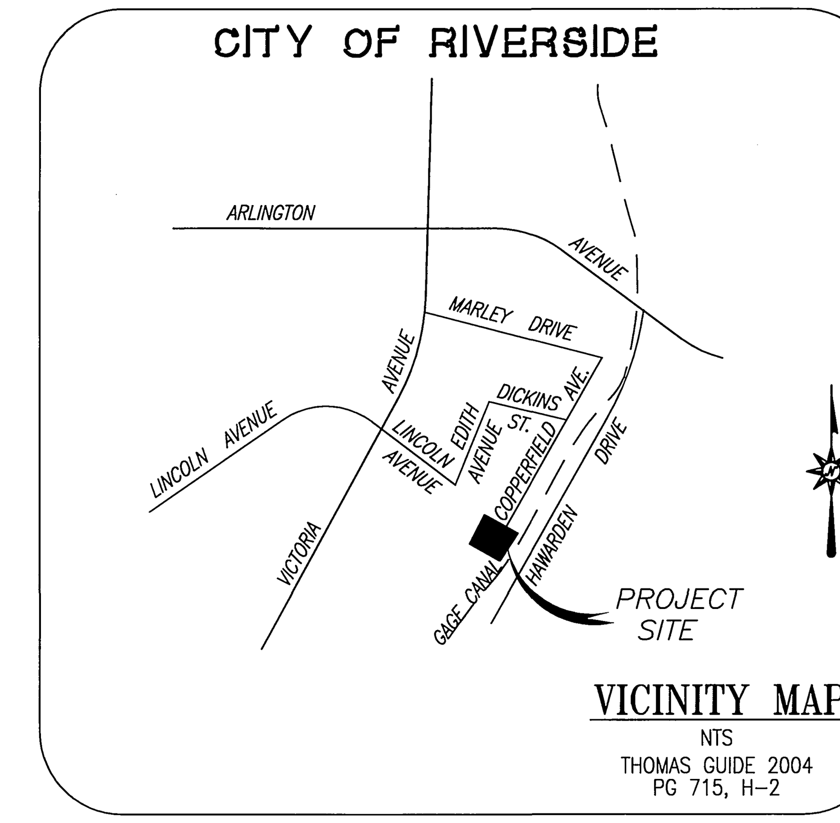


## VICINITY MAP

NTS
THOMAS GUIDE 2004
PG 715, H-2

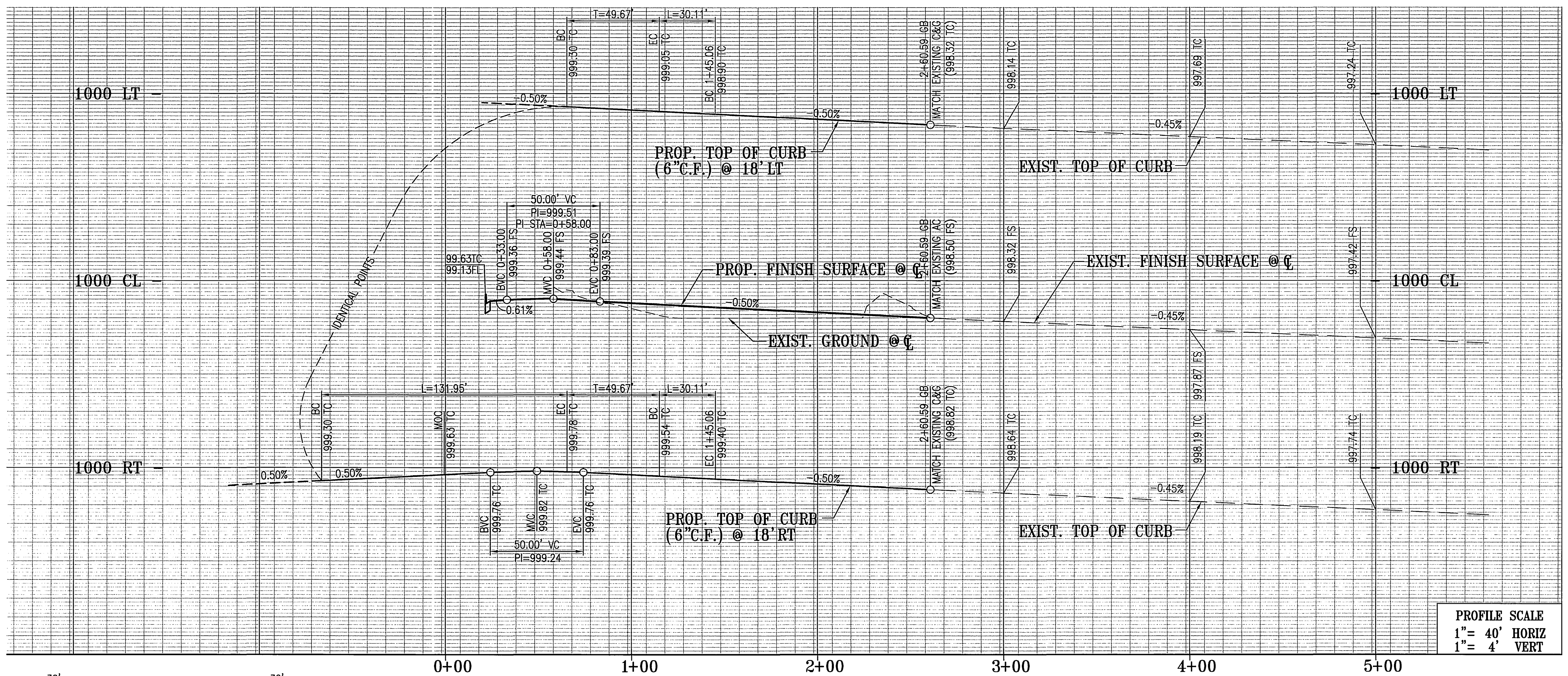


PROFILE SCALE
1"= 40' HORIZ
1"= 4' VERT

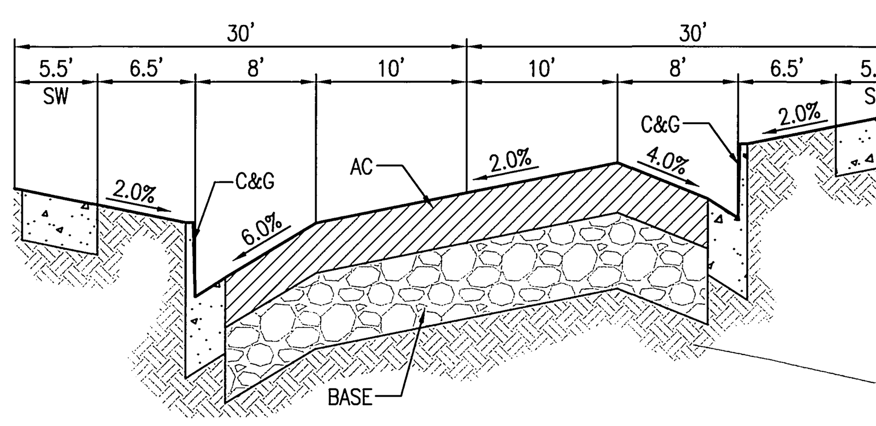


## TYPICAL SECTION

COPPERFIELD AVENUE
(PER EXISTING CONDITIONS)
N.T.S.
T.I.=5.0

| STREET CONSTRUCTION NOTES | QNTY | UNITS |
|---|---|---|
| ⟨1⟩ CONSTRUCT ____' A.C. PAVING OVER ___' AGGREGATE BASE PER SOILS ENGINEER. | 231/179 | TONS/CY |
| ⟨2⟩ CONSTRUCT TYPE I CONCRETE CURB & GUTTER PER CITY OF RIV. STD. NO. 200. | 525 | L.F. |
| ⟨3⟩ CONSTRUCT OFFSET CUL-DE-SAC PER CITY OF RIV. STD 102. | 1 | EA. |
| ⟨4⟩ CONSTRUCT SIDEWALK PER CITY OF RIV. STD. NO. 325. | 3,150 | S.F. |
| ⟨5⟩ CONSTRUCT DRIVEWAY APPROACH PER CITY OF RIV. STD 302 TYPE PL-I | 4 | EA. |
| ⟨6⟩ SAWCUT & REMOVE EXIST PAVEMENT PER DETAIL HEREON. | 11/380 | L.F./S.F. |
| ⟨7⟩ REMOVE EXIST. CURB AND GUTTER | 11 | L.F. |
| ⟨8⟩ REMOVE EXIST. SIDEWALK | 66 | S.F. |

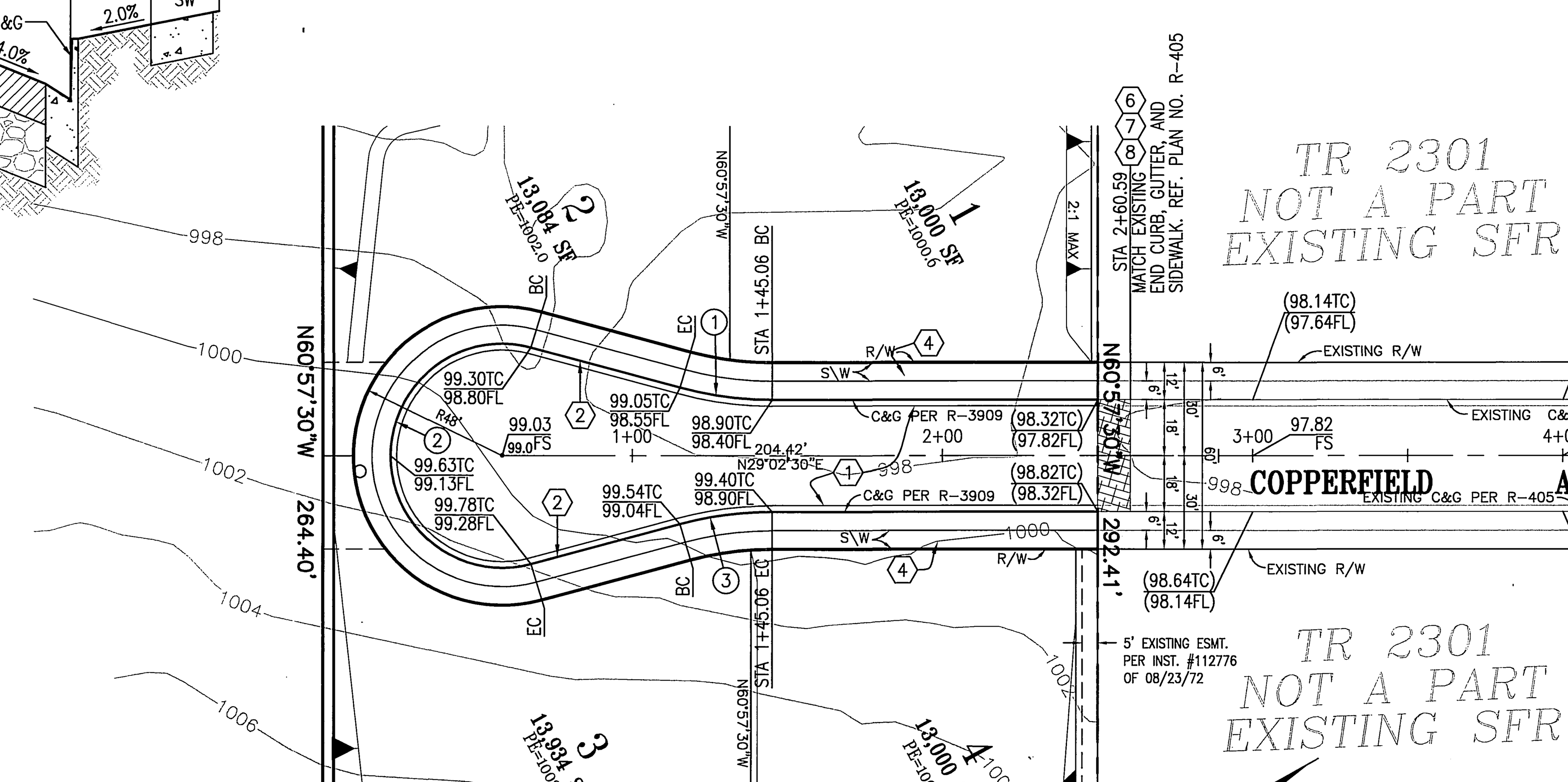


## CURVE DATA

| No. | DELTA | RADIUS | LENGTH | TANGENT |
|---|---|---|---|---|
| 1 | 15°00'00" | 115.00' | 30.11' | 15.14' |
| 2 | 210°00'00" | 36.00' | 131.95' | 134.35' |
| 3 | 15°00'00" | 115.00' | 30.11' | 15.14' |

40 20 0 40 80 120
SCALE 1"= 40'

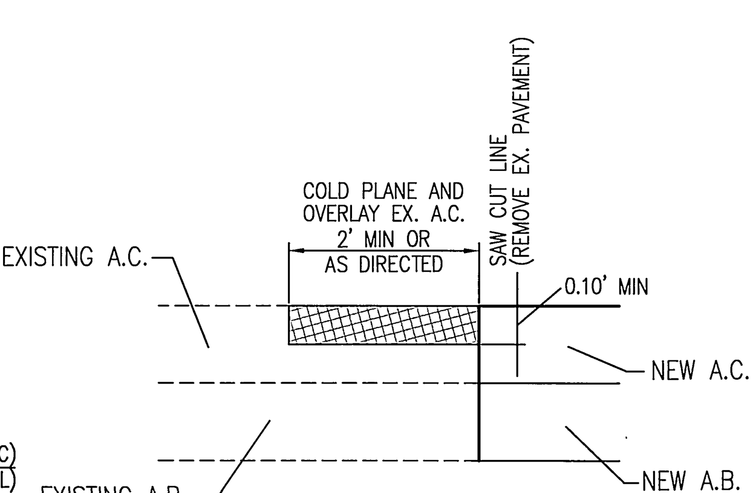


JOIN DETAIL ⟨1⟩⟨6⟩
NTS

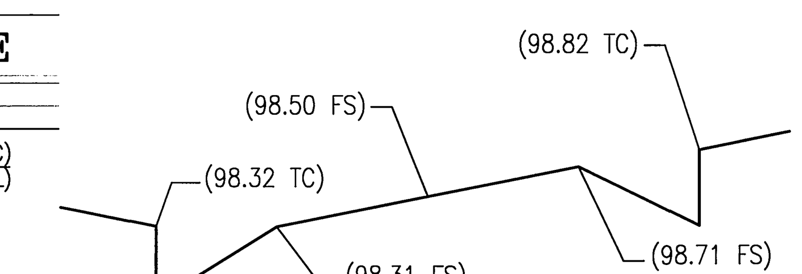


X-SECTION @ STA 2+60.59
SCALE: 1"=10'

## LEGEND

REMOVE EX. A.C. PAVEMENT
VARIABLE THICKNESS A.C. OVERLAY

## OWNER/APPLICANT

DMW Properties, LLC – Alan Wilson, Manager
12315 Oak Knoll Road, Suite 220
Poway, Ca 92064
Phone (858) 486-3350
Fax (858) 486-8350

## ENGINEER

CANTY PSOMAS
2010 IOWA AVENUE, SUITE 110
RIVERSIDE, CA 92507
PHONE: (951) 683-5234
FAX: (951) 683-5301

## SOIL ENGINEER

JOHN R. BYERLY, INC.
2257 SOUTH LILAC AVE.
BLOOMINGTON, CA 92316-2907
PHONE (909) 877-1324
FAX (909) 877-5210

## SOURCE OF TOPOGRAPHY

INLAND AERIAL
DATED 02-24-05

## PROJECT AREA:

1.58 ACRES

## DISTURBED AREA

1.58 Acres

## LEGAL DESCRIPTION

1.27 ACRES IN PORTION OF LOT 4 & 0.31 ACRES IN PORTION OF LOT 3, BLOCK 80 OF ARLINGTON HEIGHTS MB 011/020&021 OF MAPS, RECORDS OF SAN BERNARDINO COUNTY, CALIFORNIA.

## ASSESSOR'S PARCEL No:

235-292-011 & 235-292-012

## ZONING & LAND USE

EXISTING LAND USE: VACANT
PROPOSED LAND USE: SINGLE FAMILY RESIDENTIAL
EXISTING ZONING: R-1-125
PROPOSED ZONING: R-1-125
LOTS : 4
ACREAGE : 1.58 ACRES

## SITE LOCATION:

THE SOUTHERLY TERMINUS OF COPPERFIELD AVENUE, WESTERLY OF HAWARDEN DRIVE.

## THOMAS BROTHERS

Riverside Co. 2004, pg.715, grid H-2.

## UTILITIES

WATER: CITY OF RIVERSIDE
SEWER: CITY OF RIVERSIDE
GAS: SOUTHERN CALIFORNIA GAS CO.
ELECTRIC: CITY OF RIVERSIDE
TELEPHONE: SBC

Approved By:
MW McLeod 3/14/06
City of Riverside Public Utilities - Water — Date

Approved By:
Bill Marmo 3/14/06
City of Riverside Public Utilities -Electric — Date

PW05-0992

DIGALERT
CALL BEFORE YOU DIG
DIAL BEFORE YOU DIG — TOLL FREE
TWO WORKING DAYS BEFORE YOU DIG
1-800-227-2600
A PUBLIC SERVICE BY UNDERGROUND SERVICE ALERT

PRIVATE ENGINEERING NOTE

CONSTRUCTION CONTRACTOR AGREES THAT IN ACCORDANCE WITH GENERALLY ACCEPTED CONSTRUCTION PRACTICES, CONSTRUCTION CONTRACTOR WILL BE REQUIRED TO ASSUME SOLE AND COMPLETE RESPONSIBILITY FOR JOB SITE CONDITIONS DURING THE COURSE OF CONSTRUCTION OF THE PROJECT, INCLUDING SAFETY OF ALL PERSONS AND PROPERTY; THAT THIS REQUIREMENT SHALL BE MADE TO APPLY CONTINUOUSLY AND NOT BE LIMITED TO NORMAL WORKING HOURS, AND CONSTRUCTION CONTRACTOR FURTHER AGREES TO DEFEND, INDEMNIFY AND HOLD DESIGN PROFESSIONAL HARMLESS FROM ANY AND ALL LIABILITY, REAL OR ALLEGED, IN CONNECTION WITH THE PERFORMANCE OF WORK ON THIS PROJECT, EXCEPTING LIABILITY ARISING FROM THE SOLE NEGLIGENCE OF DESIGN PROFESSIONAL.

REGISTERED PROFESSIONAL ENGINEER — THOMAS S. LOVE — No. C 50993 — Exp. 09-30-07 — CIVIL — STATE OF CALIFORNIA

PREPARED UNDER THE DIRECTION OF:
THOMAS S. LOVE
REGISTERED CIVIL ENGINEER NO. 50993
EXPIRATION DATE: 09-30-07 DATE: 3/13/06

CANTY PSOMAS
2020 IOWA AVENUE, SUITE 102, P.O. BOX 52050, RIVERSIDE, CA 92517
TEL (951) 683 - 5234 FAX (951) 683 - 5301
CITY BUSINESS TAX CERT. No. 69372 EXP. 04-07-06

SCALE: AS NOTED
DATE: NOVEMBER 2005

BENCH MARK: P.K. Nail and City Engineer Tag in the top of a catch basin along the southerly curb of Jurupa Avenue, 80 feet easterly of Payton Avenue. Leveled as part of the Landfill Borrow Site Project. Point I.D. H4-G3 Elevation 758.910

| MARK | REVISIONS | APPR. | DATE |
|---|---|---|---|

DESIGNED BY M.G. DRAWN BY M.G. CHECKED BY J.C.

CITY OF RIVERSIDE, CALIFORNIA
DEPARTMENT OF PUBLIC WORKS

| APPROVED BY | BY | DATE |
|---|---|---|
| PRINCIPAL ENGR. | [illegible] | 4/24/06 |
| PARK DEPARTMENT | -- | -- |
| TRAFFIC DIVISION | SC | 4/21/06 |

APPROVED BY [signature]
CITY ENGINEER
DATE 4/24/06

IN THE CITY OF RIVERSIDE, CALIFORNIA
STREET PLAN
PM 33375
5950 COPPERFIELD AVENUE

R-3909
SHEET 1 OF 1

FOR: DMW PROPERTIES, LLC
FILE NO.: 1264-003

RJZ
INDEXED 4-26-06 4H