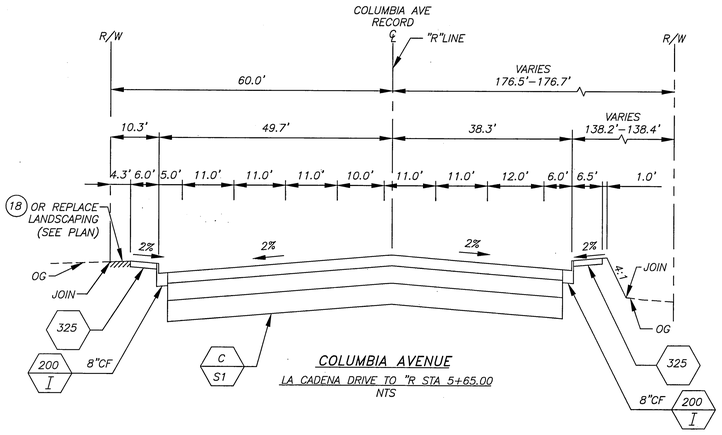

COLUMBIA AVENUE

LA CADENA DRIVE TO "R STA 5+65.00
NTS

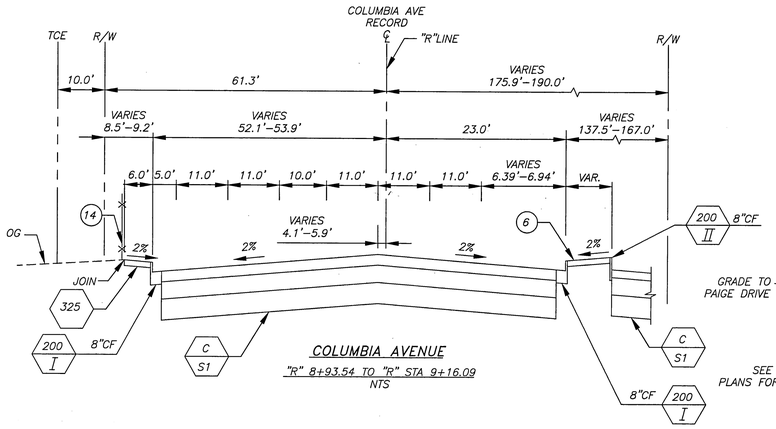

COLUMBIA AVENUE

"R" 8+93.54 TO "R" STA 9+16.09
NTS

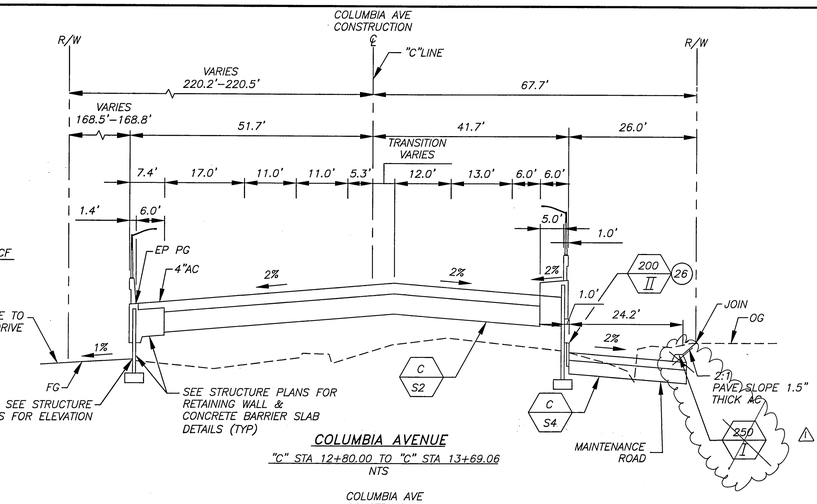

COLUMBIA AVENUE

"C" STA 12+80.00 TO "C" STA 13+69.06
NTS

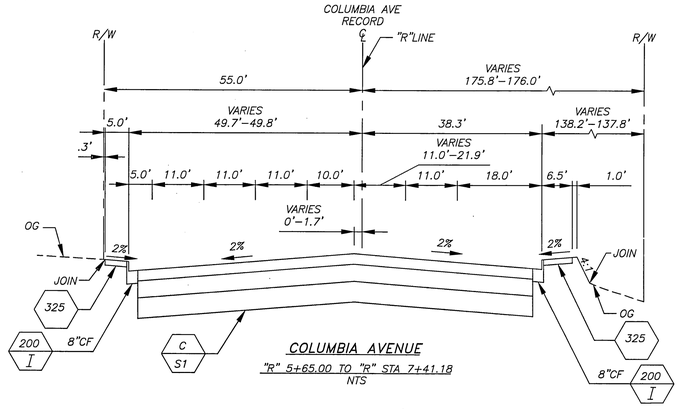

COLUMBIA AVENUE

"R" 5+65.00 TO "R" STA 7+41.18
NTS

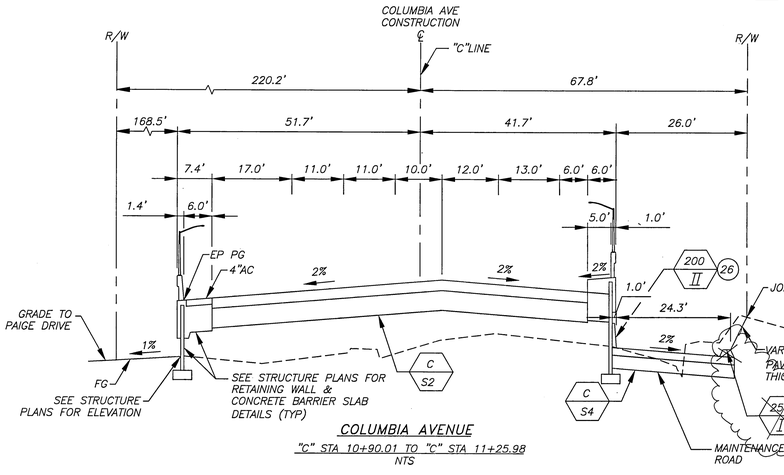

COLUMBIA AVENUE

"C" STA 10+90.01 TO "C" STA 11+25.98
NTS

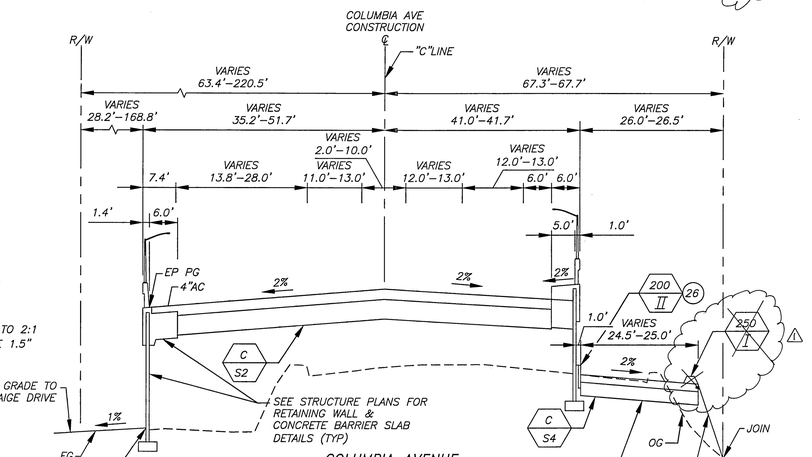

COLUMBIA AVENUE

"C" STA 13+69.06 TO "C" STA 15+32.16
NTS

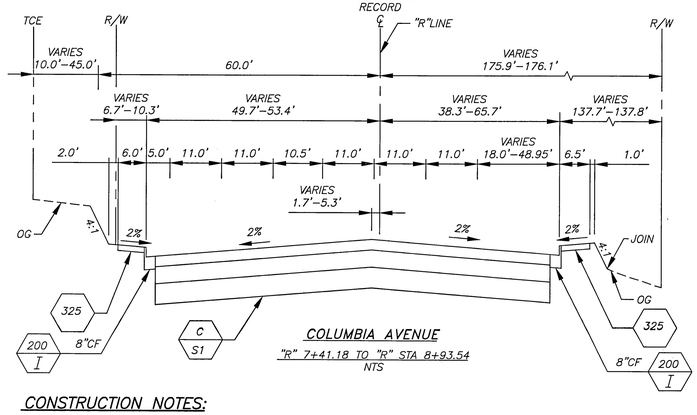

COLUMBIA AVENUE

"R" 7+41.18 TO "R" STA 8+93.54
NTS

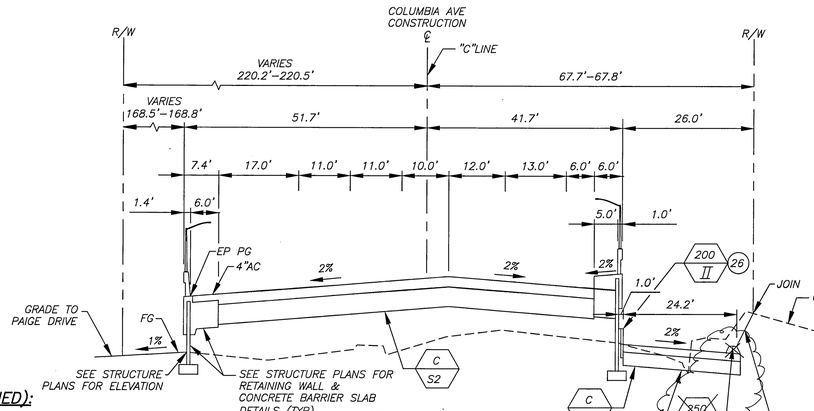

COLUMBIA AVENUE

"C" STA 11+25.98 TO "C" STA 12+80.00
NTS

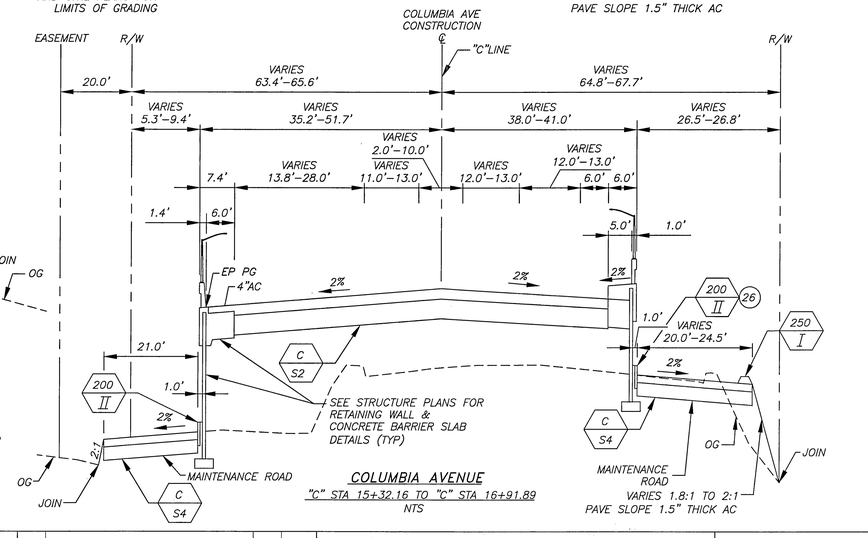

COLUMBIA AVENUE

"C" STA 15+32.16 TO "C" STA 16+91.89
NTS

CONSTRUCTION NOTES:

- (C S1) CONSTRUCT 0.55' HOT MIX ASPHALT (TYPE A) 0.90' AGGREGATE BASE (CLASS 2) OVER 1.10' AGGREGATE SUBBASE (CLASS 2).
- (C S2) CONSTRUCT 0.55' HOT MIX ASPHALT (TYPE A) OVER 1.05' AGGREGATE BASE (CLASS 2).
- (C S3) CONSTRUCT 0.40' HOT MIX ASPHALT (TYPE A) 0.60' AGGREGATE BASE (CLASS 2) OVER 0.75' AGGREGATE SUBBASE (CLASS 2).
- (C S4) CONSTRUCT 0.40' HOT MIX ASPHALT (TYPE A) OVER 0.70' AGGREGATE BASE (CLASS 2).
- (C S5) CONSTRUCT 1.30' HOT MIX ASPHALT (TYPE A).
- (6) CONSTRUCT STAMPED CONCRETE (PATTERN AND COLOR TO MATCH EXISTING MEDIAN ON CHICAGO AVENUE)
- (9) CONSTRUCT TYPE 60D BARRIER PER CALTRANS STD. PLAN A76A
- (14) CONSTRUCT 4' CHAIN LINK FENCE PER STD. DWG. NO. 380

CONSTRUCTION NOTES (CONTINUED):

- (18) CONSTRUCT AC PAVEMENT (SEE PLAN FOR THICKNESS)
- (26) CONSTRUCT 2" AC PAVING BETWEEN WALL AND TYPE II CURB

NOTES:

1. STATIONING IS BASED ON COLUMBIA AVENUE CONSTRUCTION ℄ ("C" LINE) OR RECORD ℄ ("R" LINE).
2. FOR STRIPED MEDIAN OPENINGS AND REVERSE TAPERS DETAILS, SEE CITY OF RIVERSIDE STD PLAN DWG NO.121 NO.122 AND NO.123.
3. FOR LIMITS OF RETAINING WALLS, SEE PLAN SHEET S-101 TO S-107.
4. SIDEWALK SHALL BE 6.50', EXCEPT AT WALLS WHERE THE SIDEWALK SHALL BE 5.00', OR OTHERWISE NOTED ON THE PLAN.

NUMBERS ABOVE 100 IN A HEXAGON ON THE PLAN REFER TO THE CITY OF RIVERSIDE STANDARD DRAWINGS AND SHALL BE CONSTRUCTED ACCORDINGLY, UNLESS MODIFICATIONS ARE NOTED ON THE PLAN. ANY NUMBER SHOWN BELOW THE STANDARD DRAWING NUMBER INDICATES THE SPECIFIC ALTERNATE TO BE CONSTRUCTED.

AS BUILT
DATE 9-14-10

DMJM HARRIS | AECOM
800 NORTH HAVEN, SUITE 410
ONTARIO, CA 91764
T (909)291-8150 F (909)291-8166

REGISTERED PROFESSIONAL ENGINEER
CHRIS H. BRETL
No. C41824
Exp. 3-31-10
CIVIL
STATE OF CALIFORNIA

MARK	REVISIONS	APPR.	DATE
1	AS BUILT	F.E.	9/14/10

DESIGNED BY S.A. DRAWN BY S.A. CHECKED BY C.B.

COLUMBIA AVENUE OVERPASS AT BNSF RAILROAD

TYPICAL SECTIONS

SCALE: NOT TO SCALE

ACCT. NO. -

R-4036
C-01

SHEET 6 OF 103

FILE: INFO:P:\60004223 Columbia Grade Sep\CADD\Civil\Sheet\C-01.dwg PLOTTED: Sep 15, 2008 10:55am BY:omperos PLOT SCALE: 1=1
XREFS:.xbd MODIFIED: Jul 24, 2008 9:47am

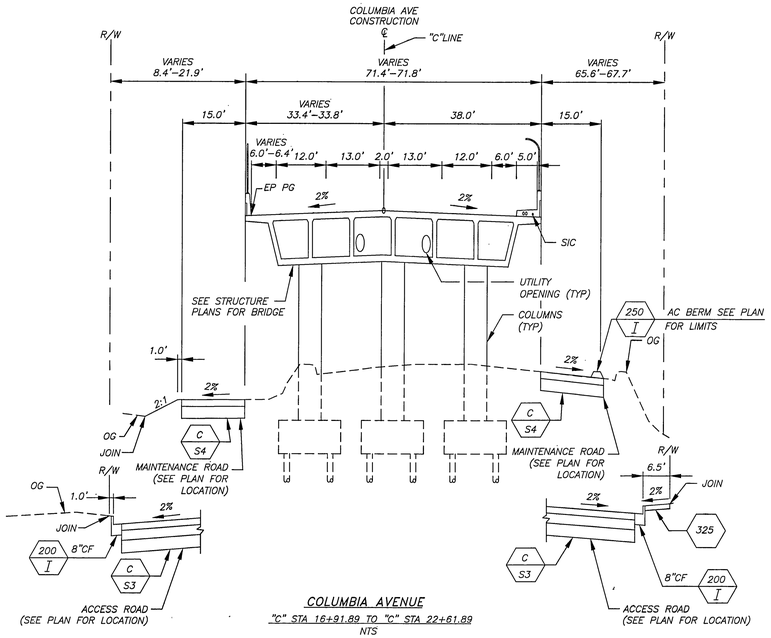

COLUMBIA AVENUE

"C" STA 16+91.89 TO "C" STA 22+61.89

NTS

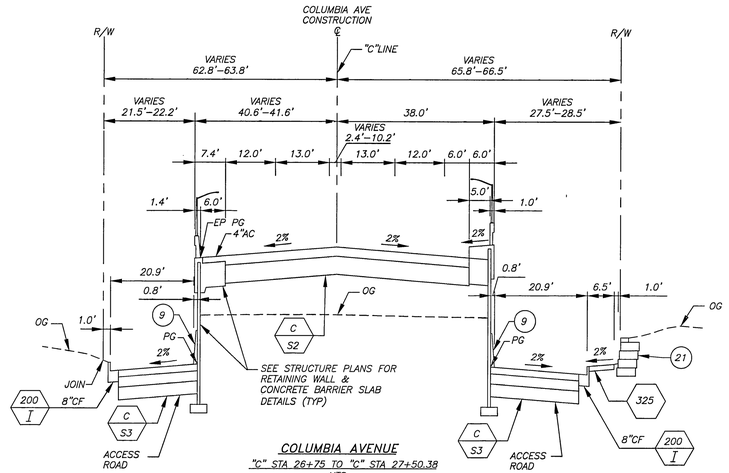

COLUMBIA AVENUE

"C" STA 26+75 TO "C" STA 27+50.38

NTS

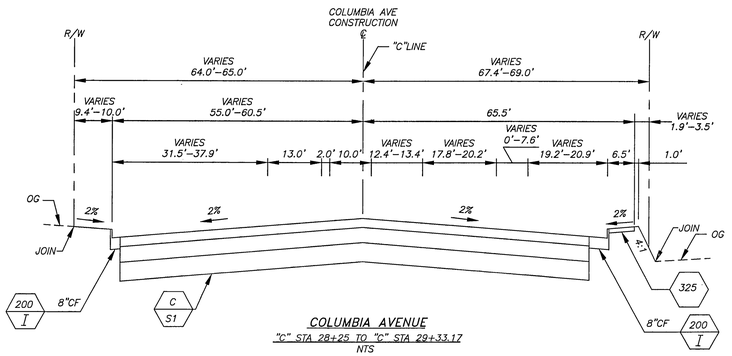

COLUMBIA AVENUE

"C" STA 28+25 TO "C" STA 29+33.17

NTS

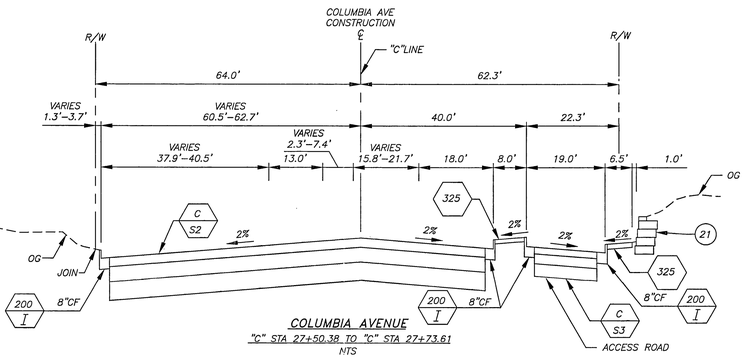

COLUMBIA AVENUE

"C" STA 27+50.38 TO "C" STA 27+73.61

NTS

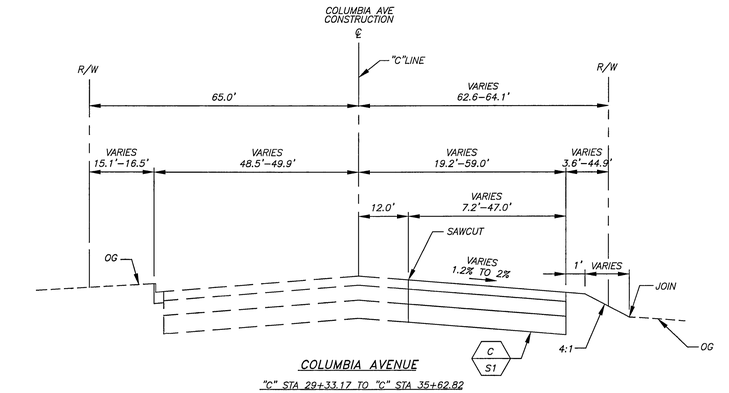

COLUMBIA AVENUE

"C" STA 29+33.17 TO "C" STA 35+62.82

NTS

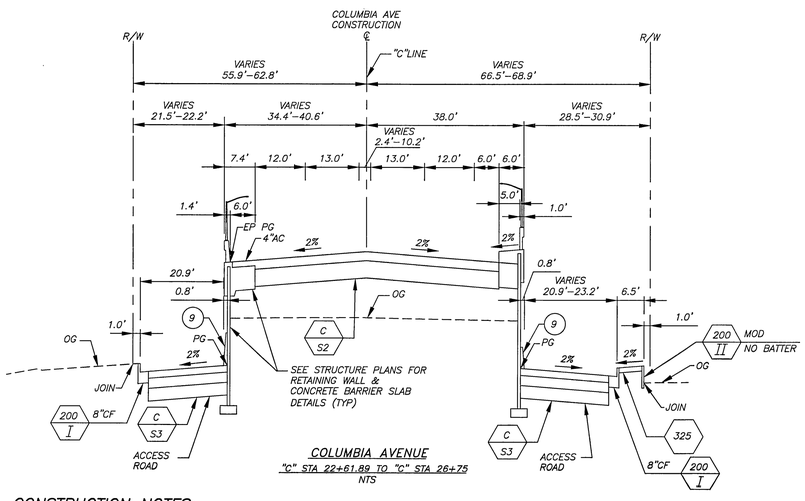

COLUMBIA AVENUE

"C" STA 22+61.89 TO "C" STA 26+75

NTS

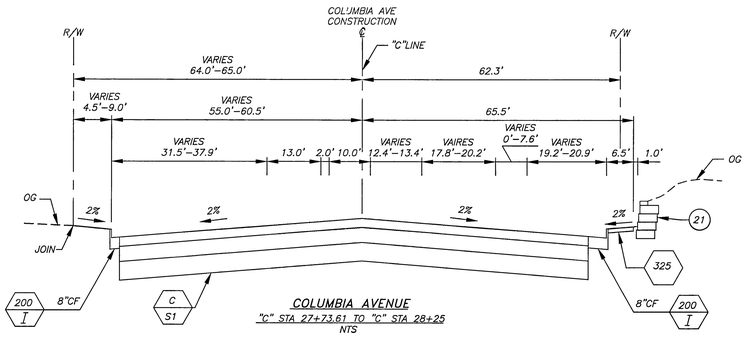

COLUMBIA AVENUE

"C" STA 27+73.61 TO "C" STA 28+25

NTS

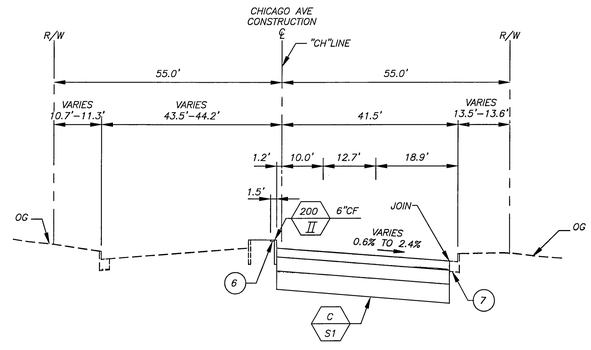

CHICAGO AVENUE

"CH" STA 5+00.00 TO "CH" STA 5+40.50

NTS

CONSTRUCTION NOTES:

- C S1 — CONSTRUCT 0.55' HOT MIX ASPHALT (TYPE A) 0.90' AGGREGATE BASE (CLASS 2) OVER 1.10' AGGREGATE SUBBASE (CLASS 2).
- C S2 — CONSTRUCT 0.55' HOT MIX ASPHALT (TYPE A) OVER 1.05' AGGREGATE BASE (CLASS 2).
- C S3 — CONSTRUCT 0.40' HOT MIX ASPHALT (TYPE A) OVER 0.60' AGGREGATE BASE (CLASS 2) OVER 0.75' AGGREGATE SUBBASE (CLASS 2).
- C S4 — CONSTRUCT 0.40' HOT MIX ASPHALT (TYPE A) OVER 0.70' AGGREGATE BASE (CLASS 2).
- C S5 — GRIND 2" EXISTING PAVEMENT AND AC OVERLAY (THICKNESS VARIES)
- (6) CONSTRUCT STAMPED CONCRETE (PATTERN AND COLOR TO MATCH EXISTING MEDIAN ON CHICAGO AVENUE)
- (7) PROTECT IN PLACE
- (9) CONSTRUCT TYPE 60D BARRIER PER CALTRANS STD. PLAN A76A
- (21) CONSTRUCT KEYSTONE GRAVITY WALL (OR APPROVED EQUAL) STANDARD UNIT 21 (STRAIGHT FACE) WITH "COOL GREY SPLIT FACE" FINISH.

NOTES:

1. STATIONING IS BASED ON COLUMBIA AVENUE CONSTRUCTION ℄ ("C" LINE) OR RECORD ℄ ("R" LINE).
   STATIONING IS BASED ON CHICAGO AVENUE CONSTRUCTION ℄ ("CH" LINE).
   STATIONING IS BASED ON PAIGE DRIVE CONSTRUCTION ℄ ("P" LINE).
   STATIONING IS BASED ON STACY COURT CONSTRUCTION ℄ ("S" LINE).
   STATIONING IS BASED ON ARDMORE STREET CONSTRUCTION ℄ ("A" LINE).
2. FOR STRIPED MEDIAN OPENINGS AND REVERSE TAPERS DETAILS, SEE CITY OF RIVERSIDE STD PLAN DWG NO.121 NO.122 AND NO.123.
3. FOR LIMITS OF RETAINING WALLS, SEE PLAN SHEET S–101 TO S–107.
4. SIDEWALK SHALL BE 6.50', EXCEPT AT WALLS WHERE THE SIDEWALK SHALL BE 5.00', OR OTHERWISE NOTED ON PLAN.

NUMBERS ABOVE 100 IN A HEXAGON ON THE PLAN REFER TO THE CITY OF RIVERSIDE STANDARD DRAWINGS AND SHALL BE CONSTRUCTED ACCORDINGLY, UNLESS MODIFICATIONS ARE NOTED ON THE PLAN. ANY NUMBER SHOWN BELOW THE STANDARD DRAWING NUMBER INDICATES THE SPECIFIC ALTERNATE TO BE CONSTRUCTED.

AS BUILT

DATE 9-14-10

DMJM HARRIS | AECOM
800 NORTH HAVEN, SUITE 410
ONTARIO, CA 91764
T (909)291–8150 F (909)291–8166

REGISTERED PROFESSIONAL ENGINEER CHRIS H. BRESLIN No. C41824 Exp. 3-31-10 CIVIL STATE OF CALIFORNIA

MARK	REVISIONS	APPR.	DATE

DESIGNED BY S.A. DRAWN BY C.S. CHECKED BY C.B.

COLUMBIA AVENUE OVERPASS AT BNSF RAILROAD

TYPICAL SECTIONS

SCALE: NOT TO SCALE

ACCT. NO. –

R–4036
C–02

SHEET 7 OF 103

FILE INFO-P:\60004223 Columbia Grade Sep\CADD\Civil\Sheet\C–02.dwg PLOTTED: Sep 15, 2008 11:04am BY amperos PLOT SCALE: 1=1
XREFS ATTACHED: Jul 24, 2008 8:47am

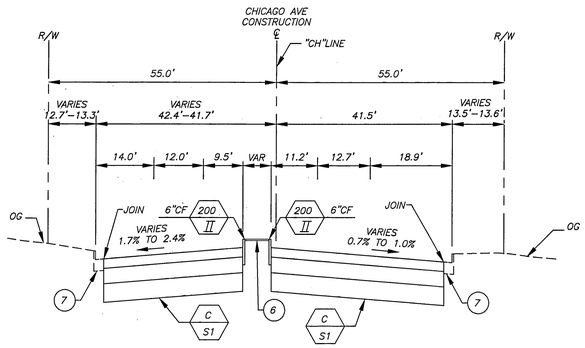

CHICAGO AVENUE

"CH" STA 5+40.50 TO "CH" STA 5+66.94

NTS

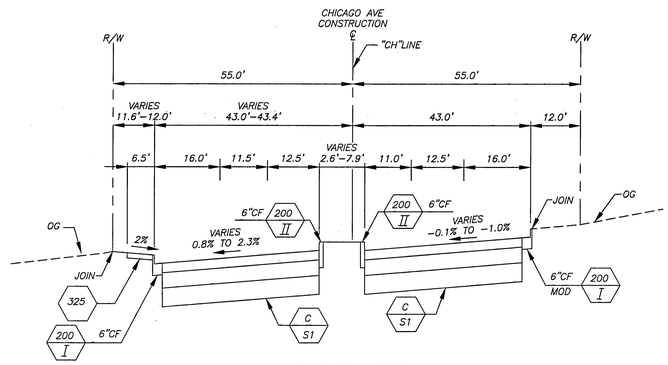

CHICAGO AVENUE

"CH" STA 6+88.67 TO "CH" STA 7+82.00

NTS

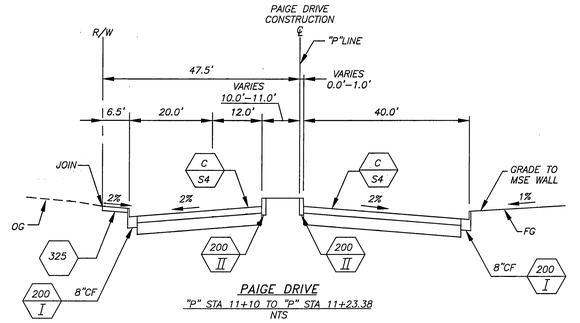

PAIGE DRIVE

"P" STA 11+10 TO "P" STA 11+23.38

NTS

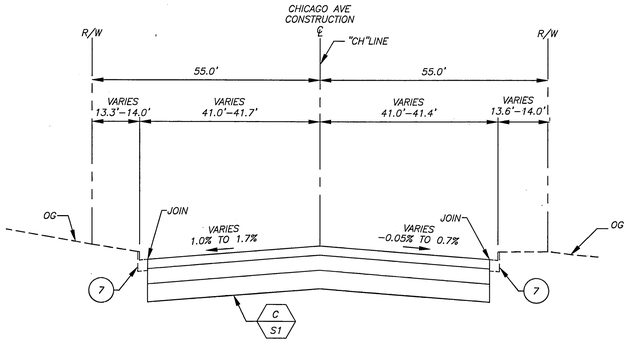

CHICAGO AVENUE

"CH" STA 5+66.94 TO "CH" STA 6+50.00

NTS

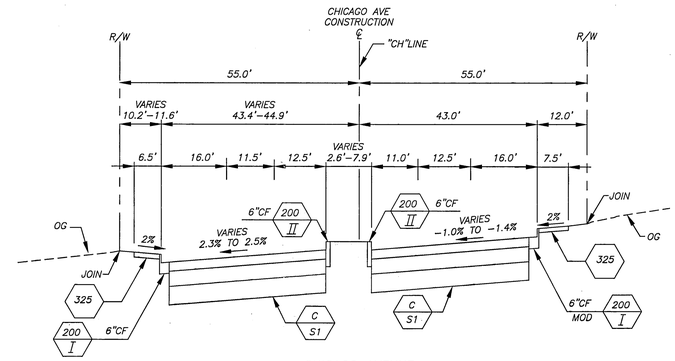

CHICAGO AVENUE

"CH" STA 7+82.00 TO "CH" STA 8+12.46

NTS

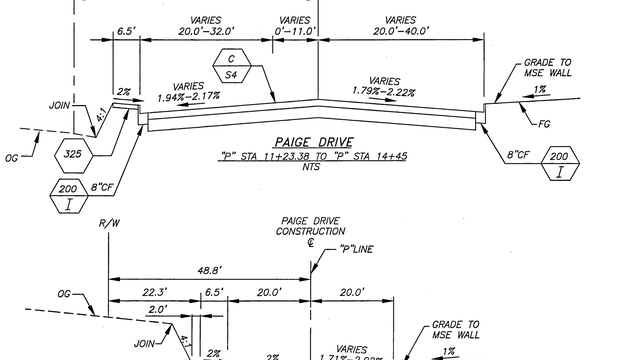

PAIGE DRIVE

"P" STA 11+23.38 TO "P" STA 14+45

NTS

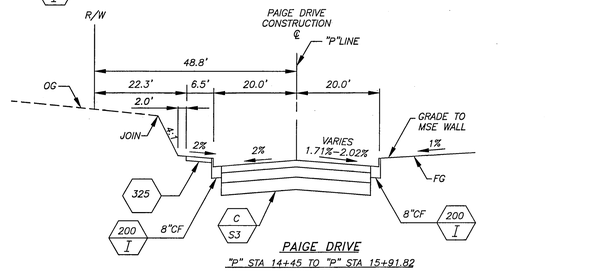

PAIGE DRIVE

"P" STA 14+45 TO "P" STA 15+91.82

NTS

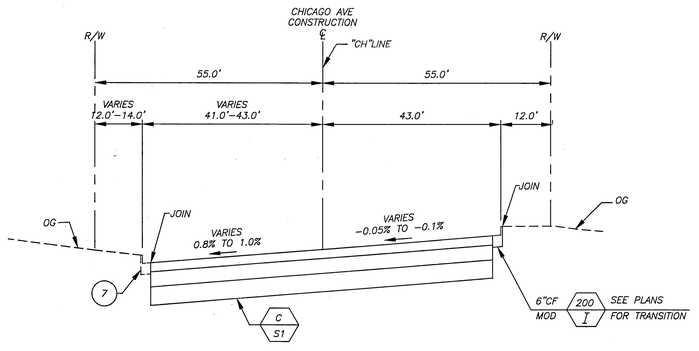

CHICAGO AVENUE

"CH" STA 6+50.00 TO "CH" STA 6+88.67

NTS

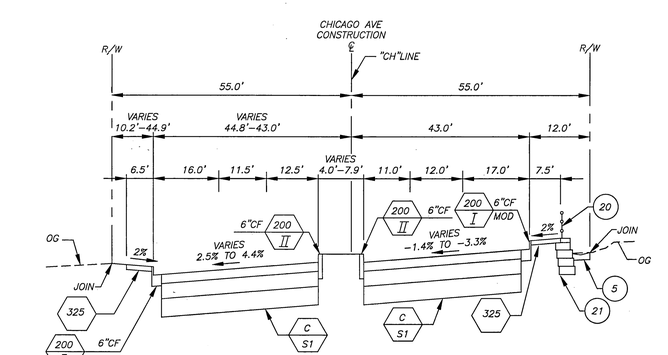

CHICAGO AVENUE

"CH" STA 8+12.46 TO "CH" STA 9+42.05

NTS

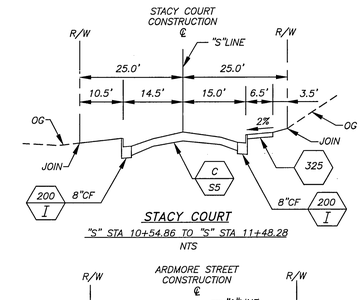

STACY COURT

"S" STA 10+54.86 TO "S" STA 11+48.28

NTS

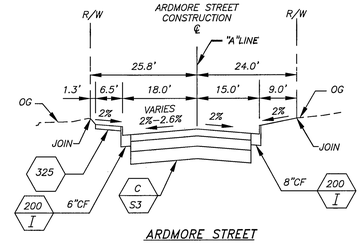

ARDMORE STREET

"A" STA 10+72.38 TO "A" STA 10+95.93

NTS

CONSTRUCTION NOTES:

- C S1 — CONSTRUCT 0.55' HOT MIX ASPHALT (TYPE A) 0.90' AGGREGATE BASE (CLASS 2) OVER 1.10' AGGREGATE SUBBASE (CLASS 2).
- C S2 — CONSTRUCT 0.55' HOT MIX ASPHALT (TYPE A) OVER 1.05' AGGREGATE BASE (CLASS 2).
- C S3 — CONSTRUCT 0.40' HOT MIX ASPHALT (TYPE A) 0.60' AGGREGATE BASE (CLASS 2) OVER 0.75' AGGREGATE SUBBASE (CLASS 2).
- C S4 — CONSTRUCT 0.40' HOT MIX ASPHALT (TYPE A) OVER 0.70' AGGREGATE BASE (CLASS 2).
- C S5 — GRIND EXISTING PAVEMENT (2" DEEP) AND AC OVERLAY (THICKNESS VARIES)
- (5) CONSTRUCT 4" AC PAVEMENT
- (6) CONSTRUCT STAMPED CONCRETE (PATTERN AND COLOR TO MATCH EXISTING MEDIAN ON CHICAGO AVENUE)
- (7) PROTECT IN PLACE
- (20) CONSTRUCT ORNAMENTAL RAILING PER DETAIL ON SHEET C–20 (DIRECT MOUNT–50 PLF STANDARD PER KEYSTONE SPECIFICATIONS)
- (21) CONSTRUCT KEYSTONE GRAVITY WALL (OR APPROVED EQUAL) STANDARD UNIT 21 (STRAIGHT FACE) WITH "COOL GREY SPLIT FACE" FINISH

NOTES:

1. STATIONING IS BASED ON CHICAGO AVENUE CONSTRUCTION ℄ ("CH" LINE).
   STATIONING IS BASED ON PAIGE DRIVE CONSTRUCTION ℄ ("P" LINE).
   STATIONING IS BASED ON STACY COURT CONSTRUCTION ℄ ("S" LINE).
   STATIONING IS BASED ON ARDMORE STREET CONSTRUCTION ℄ ("A" LINE).
2. FOR STRIPED MEDIAN OPENINGS AND REVERSE TAPERS DETAILS, SEE CITY OF RIVERSIDE STD PLAN DWG NO.121 NO.122 AND NO.123.
3. FOR LIMITS OF RETAINING WALLS, SEE PLAN SHEET S–101 TO S–107.
4. SIDEWALK SHALL BE 6.50', EXCEPT AT WALLS WHERE THE SIDEWALK SHALL BE 5.00', OR OTHERWISE NOTED ON PLAN.

NUMBERS ABOVE 100 IN A HEXAGON ON THE PLAN REFER TO THE CITY OF RIVERSIDE STANDARD DRAWINGS AND SHALL BE CONSTRUCTED ACCORDINGLY, UNLESS MODIFICATIONS ARE NOTED ON THE PLAN. ANY NUMBER SHOWN BELOW THE STANDARD DRAWING NUMBER INDICATES THE SPECIFIC ALTERNATE TO BE CONSTRUCTED.

AS BUILT

DATE 9-14-10

DMJM HARRIS | AECOM
800 NORTH HAVEN, SUITE 410
ONTARIO, CA 91764
T (909)291–8150 F (909)291–8166

REGISTERED PROFESSIONAL ENGINEER
CHRIS H. BREMER
No. C 41824
Exp. 3-31-10
CIVIL
STATE OF CALIFORNIA

MARK	REVISIONS	APPR.	DATE

DESIGNED BY S.A. DRAWN BY C.S. CHECKED BY C.B.

COLUMBIA AVENUE OVERPASS AT BNSF RAILROAD

TYPICAL SECTIONS

SCALE: NOT TO SCALE

ACCT. NO. –

R–4036
C–03

SHEET 8 OF 103

FILE INFO:P:\60004223 Columbia Grade Sep\CADD\Civil\Sheet\C-03.dwg PLOTTED: Sep 15, 2008 11:04am BY:omparos PLOT SCALE: 1=1
XREFS:xbdr MODIFIED: Jul 24, 2008 9:47am

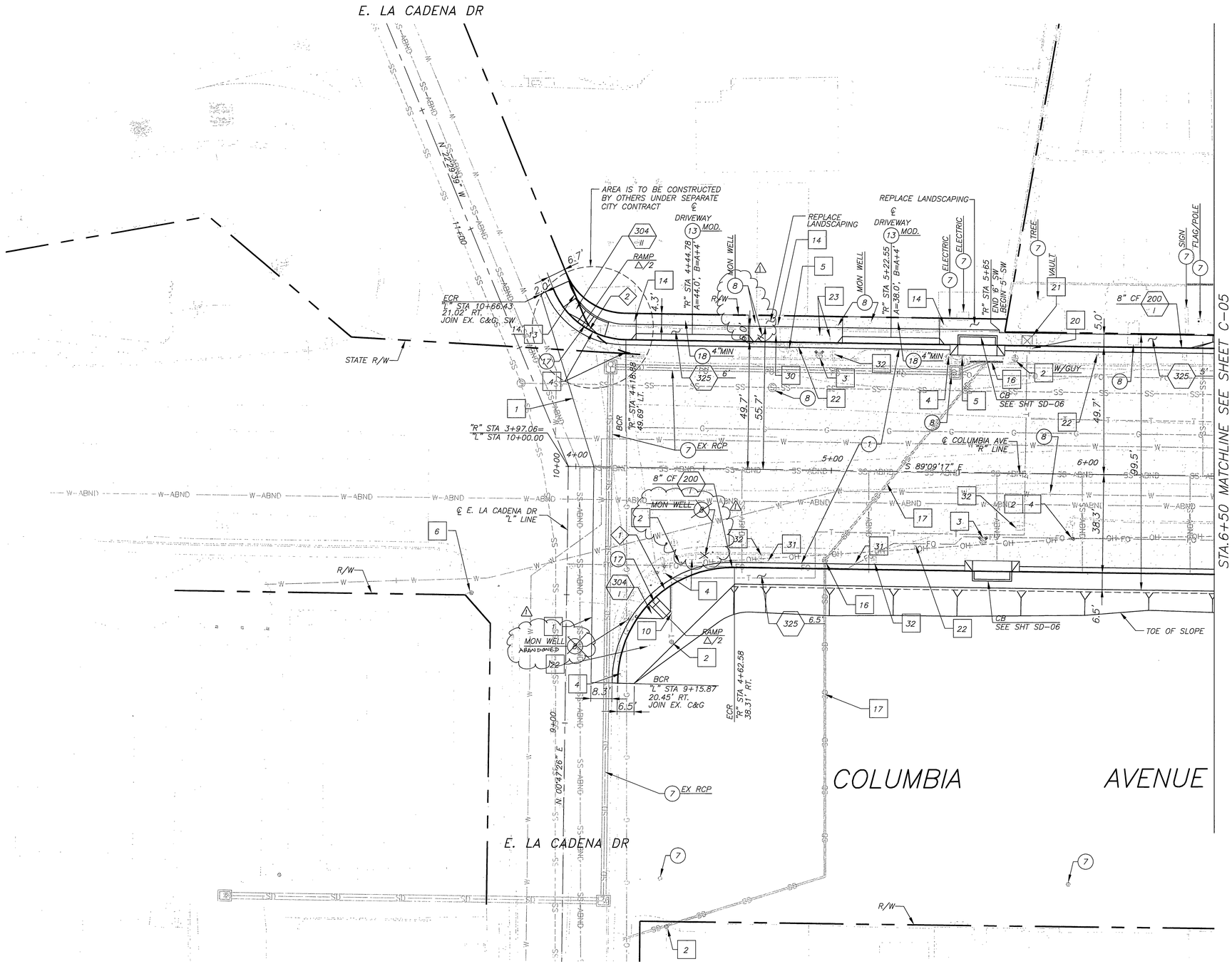

REMOVAL NOTES:

1. SAWCUT LINE
2. REMOVE POWER POLE
3. RELOCATE FIRE HYDRANT, WATER METER OR WATER FACILITIES (BY CITY PUBLIC UTILITIES)
4. REMOVE STREET LIGHT AND STREET LIGHT PULL BOXES
5. REMOVE TREE
6. REMOVE GUY POLE (BY OTHERS)
10. RELOCATE GUY WIRE (BY OTHERS)
13. REMOVE FENCE
14. RELOCATE BUSINESS SIGN TO NEW LOCATION APPROVED BY ENGINEER
16. REMOVE EXISTING DRAINAGE INLET
17. REMOVE EXISTING DRAINAGE CONDUIT
20. RELOCATE (AT&T) TELEPHONE FACILITY (BY OTHERS)
21. ELECTRIC VAULT TO BE ADJUST TO GRADE (BY OTHERS)
22. RELOCATE SIGN TO NEW LOCATION APPROVED BY ENGINEER
23. RELOCATE BACKFLOW FACILITIES (BY OTHERS)
30. RELOCATE ELECTRICAL OUTLET
31. REMOVE MAIL BOX
32. REMOVE WATER METER AND ABANDON WATER SERVICE LINE (BY CITY PUBLIC UTILITIES)

CONSTRUCTION NOTES:

1. CONSTRUCT AC PAVEMENT (0.55' HMA ON 0.90' AB ON 1.10' AS)
7. PROTECT IN PLACE
8. ADJUST TO GRADE
13. CONSTRUCT DRIVEWAY PER STD. DWG. NO. 302 TYPE CURB-I (SEE PLAN FOR DETAILS)
17. CONSTRUCT DETECTABLE WARNING SURFACE PER CALTRANS STD. PLAN A88A
18. CONSTRUCT AC PAVEMENT (SEE PLAN FOR THICKNESS)

LEGEND:

ASPHALT CONCRETE

CURVE DATA				
CURVE	R	△	L	T
◇1	45.00'	91°01'23"	71.49'	45.81'
◇2	31.00'	68°28'21"	37.05'	21.10'

NOTES:

1. STATIONING IS BASED ON COLUMBIA AVENUE "R" LINE, (RECORD CENTERLINE).
2. SIDEWALK SHALL BE 6.50', EXCEPT AT WALLS WHERE THE SIDEWALK SHALL BE 5.00' OR OTHERWISE NOTED ON THE PLANS.

NUMBERS ABOVE 100 IN A HEXAGON ON THE PLAN REFER TO THE CITY OF RIVERSIDE STANDARD DRAWINGS AND SHALL BE CONSTRUCTED ACCORDINGLY, UNLESS MODIFICATIONS ARE NOTED ON THE PLAN. ANY NUMBER SHOWN BELOW THE STANDARD DRAWING NUMBER INDICATES THE SPECIFIC ALTERNATE TO BE CONSTRUCTED.

N

20' 10' 0 20' 40'
GRAPHIC SCALE: 1" = 20' HORIZ

AS BUILT
DATE 9-14-10

DMJM HARRIS | AECOM
800 NORTH HAVEN, SUITE 410
ONTARIO, CA 91764
T (909)291-8150 F (909)291-8166

REGISTERED PROFESSIONAL ENGINEER CHRIS H. BRECHT No. C41824 Exp. 3-31-10 CIVIL STATE OF CALIFORNIA

MARK	REVISIONS	APPR.	DATE
1	AS BUILT	F.R.	9/14/10

DESIGNED BY S.A. DRAWN BY S.A. CHECKED BY C.B.

COLUMBIA AVENUE OVERPASS AT BNSF RAILROAD

PLAN-COLUMBIA AVENUE
E. LA CADENA DRIVE TO "R" 6+50

SCALE: 1" = 20'

ACCT. NO. -

R-4036
C-04
SHEET 9 OF 103

FILE INFO:P:\60004223 Columbia Grade Sep\CADD\Civil\Sheet\C-04.dwg PLOTTED: Sep 29, 2008 12:05pm BY:amparos PLOT SCALE: 1=40
XREFS:xbdr: xutl_ex: xtopo, xrow_linqi: xrd-colu, xutl_pro MODIFIED: Sep 19, 2008 6:06pm

PAIGE DRIVE

STA.11+10 MATCHLINE SEE SHEET C-11

STA.6+50 MATCHLINE SEE SHEET C-04

STA.11+50 MATCHLINE SEE SHEET C-06

COLUMBIA AVENUE

STA.7+50 MATCHLINE SEE SHEET C-19
CHICAGO AVENUE

REMOVAL NOTES:

1. SAW CUT
2. REMOVE POWER POLE
3. RELOCATE FIRE HYDRANT, WATER METER OR WATER FACILITIES (BY CITY PUBLIC UTILITIES)
4. REMOVE STREET LIGHT AND STREET LIGHT PULL BOXES
5. REMOVE TREE
6. REMOVE GUY POLE (BY OTHERS)
9. REMOVE STRUCTURE
13. REMOVE FENCE
14. RELOCATE BUSINESS SIGN TO NEW LOCATION APPROVED BY ENGINEER
15. REMOVE ELECTRICAL VAULT (BY OTHERS)
16. REMOVE EXISTING DRAINAGE INLET
17. REMOVE EXISTING DRAINAGE CONDUIT
18. REMOVE MBGR
19. REMOVE GATE
20. RELOCATE (AT&T) TELEPHONE FACILITY (BY OTHERS)
22. RELOCATE SIGN TO NEW LOCATION APPROVED BY ENGINEER
25. REMOVE IRRIGATION CONTROL BOX
27. REMOVE GROUTED STONE RETAINING WALL
32. REMOVE WATER METER AND ABANDON WATER SERVICE LINE (BY CITY PUBLIC UTILITIES)

CONSTRUCTION NOTES:

1. CONSTRUCT AC PAVEMENT (0.55' HMA ON 0.90' AB ON 1.10' AS)
2. CONSTRUCT AC PAVEMENT (0.55' HMA ON 1.05' AB)
4. CONSTRUCT AC PAVEMENT (0.40' HMA ON 0.70' AB)
5. CONSTRUCT 4" AC PAVEMENT
6. CONSTRUCT STAMPED CONCRETE (PATTERN AND COLOR TO MATCH EXISTING MEDIAN ON CHICAGO AVENUE)
7. PROTECT IN PLACE
8. ADJUST TO GRADE
11. CONSTRUCT 6' CHAIN LINK FENCE PER STD. DWG. NO. 380. REMOVE TEMPORARY FENCING AFTER INSTALLATION OF PERMANENT FENCING.
12. CONSTRUCT DRIVE GATE PER STD. DWG. NO. 380
13. CONSTRUCT DRIVEWAY PER STD. DWG. NO. 302 TYPE CURB-I. (SEE PLAN FOR DETAILS)
14. CONSTRUCT 4' CHAIN LINK FENCE PER STD. DWG. NO. 380
17. CONSTRUCT DETECTABLE WARNING SURFACE PER CALTRANS STD. PLAN A88A
18. CONSTRUCT AC PAVEMENT (SEE PLAN FOR THICKNESS)
19. RE-ESTABLISH MEDIAN PLANTING & IRRIGATION TO MATCH EXISTING
20. CONSTRUCT ORNAMENTAL RAILING PER DETAIL ON SHEET S-101
21. CONSTRUCT KEYSTONE GRAVITY WALL (OR APPROVED EQUAL)
25. CONSTRUCT MODIFIED TYPE C PASSAGEWAY PER CALTRANS STD. PLAN A88B
28. CONSTRUCT 4" C.I. PIPE CURB DRAIN PER APWA STD. PLAN 150-2

LEGEND:

- RETAINING WALL
- ASPHALT CONCRETE
- FULL DEPTH AC
- STAMPED CONCRETE
- MEDIAN PLANTING

CURVE DATA

CURVE	R	Δ	L	T
1	35.00'	89°58'37"	54.96'	34.99'
2	45.00'	90°00'00"	70.69'	45.00'
3	45.00'	88°36'50"	69.60'	43.92'
4	3.00'	149°52'43"	7.85'	11.15'
5	5.00'	90°01'10"	7.86'	5.00'
6	2.00'	148°38'21"	5.19'	7.12'
7	150.00'	87°06'32"	228.05'	142.62'
8	174.00'	28°32'05"	44.25'	86.66'

NOTES:

1. STATIONING IS BASED ON COLUMBIA AVENUE (RECORD CENTERLINE) "R" OR (CONSTRUCTION CENTERLINE) "C" LINE.
2. FOR LIMITS OF RETAINING WALLS, SEE PLAN SHEET S-101 TO S-107
3. SIDEWALK SHALL BE 6.50', EXCEPT AT WALLS WHERE THE SIDEWALK SHALL BE 5.00' OR OTHERWISE NOTED ON THE PLANS.
4. FOR DESIGN ELEVATIONS FROM "R" STA 8+50.00 TO "C" STA 10+55.95 SEE INTERSECTION DESIGN DETAILS ON PLAN SHEET C-20.

NUMBERS ABOVE 100 IN A HEXAGON ON THE PLAN REFER TO THE CITY OF RIVERSIDE STANDARD DRAWINGS AND SHALL BE CONSTRUCTED ACCORDINGLY, UNLESS MODIFICATIONS ARE NOTED ON THE PLAN. ANY NUMBER SHOWN BELOW THE STANDARD DRAWING NUMBER INDICATES THE SPECIFIC ALTERNATE TO BE CONSTRUCTED.

N

20' 10' 0 20' 40'

GRAPHIC SCALE: 1" = 20' HORIZ

AS BUILT

DATE 9-14-10

DMJM HARRIS | AECOM

800 NORTH HAVEN, SUITE 410
ONTARIO, CA 91764
T (909)291-8150 F (909)291-8166

REGISTERED PROFESSIONAL ENGINEER CHRIS H. BRESLIN No. C 41824 Exp. 3-31-10 CIVIL STATE OF CALIFORNIA

MARK	REVISIONS	APPR.	DATE
2	AS BUILT	F.R.	9/14/10
1	REV. CONST. NOTE & ADDED FULL-DEPTH AC OVER SD	C.B.	8-18-08

DESIGNED BY S.A. DRAWN BY S.A. CHECKED BY C.B.

COLUMBIA AVENUE OVERPASS AT BNSF RAILROAD

PLAN-COLUMBIA AVENUE "R" 6+50 TO "C" 11+50

SCALE: 1" = 20'

ACCT. NO. -

R-4036
C-05

SHEET 10 OF 103

FILE INFO:P:\60004223 Columbus Grade Sep\CADD\Civil\Sheet\C-05.dwg PLOTTED: Sep 29, 2008 12:42pm BY:amporos PLOT SCALE: 1=1
XREFS xbdr: xtopo, xutil_arc, x-contl; xrow_legl; xrd-colu; xutil_pro MODIFIED Sep 19, 2008 6:06pm

SEE SHEET C-11

STA. 11+50 MATCHLINE SEE SHEET C-05

STA. 16+50 MATCHLINE SEE SHEET C-07

REMOVE EXIST. AC PVMT.

STACY COURT

℄ STACY COURT

GRADE 1% TO PAIGE DRIVE

RETAINING WALL NO.2 SEE STRUCTURE PLANS

"C" STA 13+69.06 BEGIN TAPER

GRADE 1% TO PAIGE DRIVE

REMOVE EXIST. PVMT., SW, C&G

ARDMORE STREET

℄ ARDMORE STREET

"MR" LOL

TOE OF SLOPE

R/W

UTILITY EASEMENT

MAINTENANCE ROAD

FENCE

STEEL SPLIT-CASING FOR DETAILS SEE WATER PLANS & SPECIFICATIONS

℄ COLUMBIA AVE "C" LINE

"C" STA 15+19.76 ANGLE POINT

"C" STA 12+07.77 ℄ STACY COURT

"R" STA 12+09.77 ℄ STACY COURT

S 89°09'17" E

S 88°07'30" E

"C" STA 15+37.65 ℄ ARDMORE STREET

"R" STA 15+37.74 ℄ ARDMORE STREET

℄ COLUMBIA AVE "R" LINE

SIC CONTINUE TO CHICAGO AVENUE

SIC CONTINUE TO IOWA AVENUE

8"CF 200 II

RETAINING WALL NO.2 SEE STRUCTURE PLANS

BRIDGE

MAINTENANCE ROAD

R/W

"MR" LOL

"C" STA 14+50.00 BEGIN TAPER

"C" STA 15+29.20 60.28' RT ANGLE POINT BEG 4C BEAM

"C" STA 16+79.06 60.03' RT ANGLE POINT

FENCE

TOE OF SLOPE

"C" STA 16+49.87 ANGLE POINT

6" WL

36" WL

54" WL

48" WL

L=506' 250

COLUMBIA AVENUE

REMOVAL NOTES:

2	REMOVE POWER POLE
3	RELOCATE FIRE HYDRANT, WATER METER OR WATER FACILITIES (BY CITY PUBLIC UTILITIES)
5	REMOVE TREE
16	REMOVE EXISTING DRAINAGE INLET
22	RELOCATE SIGN TO NEW LOCATION APPROVED BY ENGINEER
23	RELOCATE BACKFLOW FACILITIES (BY OTHERS)
32	REMOVE WATER METER AND ABANDON WATER SERVICE LINE (BY CITY PUBLIC UTILITIES)

CONSTRUCTION NOTES:

2	CONSTRUCT AC PAVEMENT (0.55' HMA ON 1.05' AB)
4	CONSTRUCT AC PAVEMENT (0.40' HMA ON 0.70' AB)
5	CONSTRUCT 4" AC PAVEMENT
7	PROTECT IN PLACE
12	CONSTRUCT DRIVE GATE PER STD. DWG. NO. 380

LEGEND:

ASPHALT CONCRETE

FULL DEPTH AC

RETAINING WALL

CURVE DATA

CURVE	R	Δ	L	T
1	35.00'	86°30'39"	52.85'	32.93'

NOTES:

1. STATIONING IS BASED ON COLUMBIA AVENUE (RECORD CENTERLINE) "R" OR (CONSTRUCTION CENTERLINE) "C" LINE.
2. FOR LIMITS OF RETAINING WALLS, SEE PLAN SHEET S-101 TO S-107
3. SIDEWALK SHALL BE 6.50', EXCEPT AT WALLS WHERE THE SIDEWALK SHALL BE 5.00' OR OTHERWISE NOTED ON THE PLANS.
4. REMOVE EXISTING PAVEMENT, SIDEWALK AND CURB & GUTTER ON STACY COURT AND ARDMORE STREET BETWEEN COLUMBIA AVENUE AND PAIGE DRIVE.

NUMBERS ABOVE 100 IN A HEXAGON ON THE PLAN REFER TO THE CITY OF RIVERSIDE STANDARD DRAWINGS AND SHALL BE CONSTRUCTED ACCORDINGLY, UNLESS MODIFICATIONS ARE NOTED ON THE PLAN. ANY NUMBER SHOWN BELOW THE STANDARD DRAWING NUMBER INDICATES THE SPECIFIC ALTERNATE TO BE CONSTRUCTED.

N

20' 10' 0 20' 40'

GRAPHIC SCALE: 1" = 20' HORIZ

AS BUILT

DATE 9-14-10

DMJM HARRIS | AECOM
800 NORTH HAVEN, SUITE 410
ONTARIO, CA 91764
T (909)291-8150 F (909)291-8166

REGISTERED PROFESSIONAL ENGINEER CHRIS H. BREWER No. C 41824 Exp. 3-31-10 CIVIL STATE OF CALIFORNIA

MARK	REVISIONS	APPR.	DATE
1	AS BUILT	F.R.	9/14/10

DESIGNED BY S.A. DRAWN BY S.A. CHECKED BY C.B.

COLUMBIA AVENUE OVERPASS AT BNSF RAILROAD

PLAN-COLUMBIA AVENUE "C" 11+50 TO "C" 16+50

SCALE: 1" = 20'

ACCT. NO. -

R-4036

C-06

SHEET 11 OF 103

FILE INFO:P:\60024221 Columbia Grade Sep\CADD\Civil\Sheet\C-06.dwg PLOTTED Sep 29, 2008 12:41pm BY emperes PLOT SCALE 1=1
REFS: xbdr_11000_xuil_ex_x-bridge-columbia-c_x-row_final_xrd-cola MODIFIED Sep 18, 2008 1:34pm

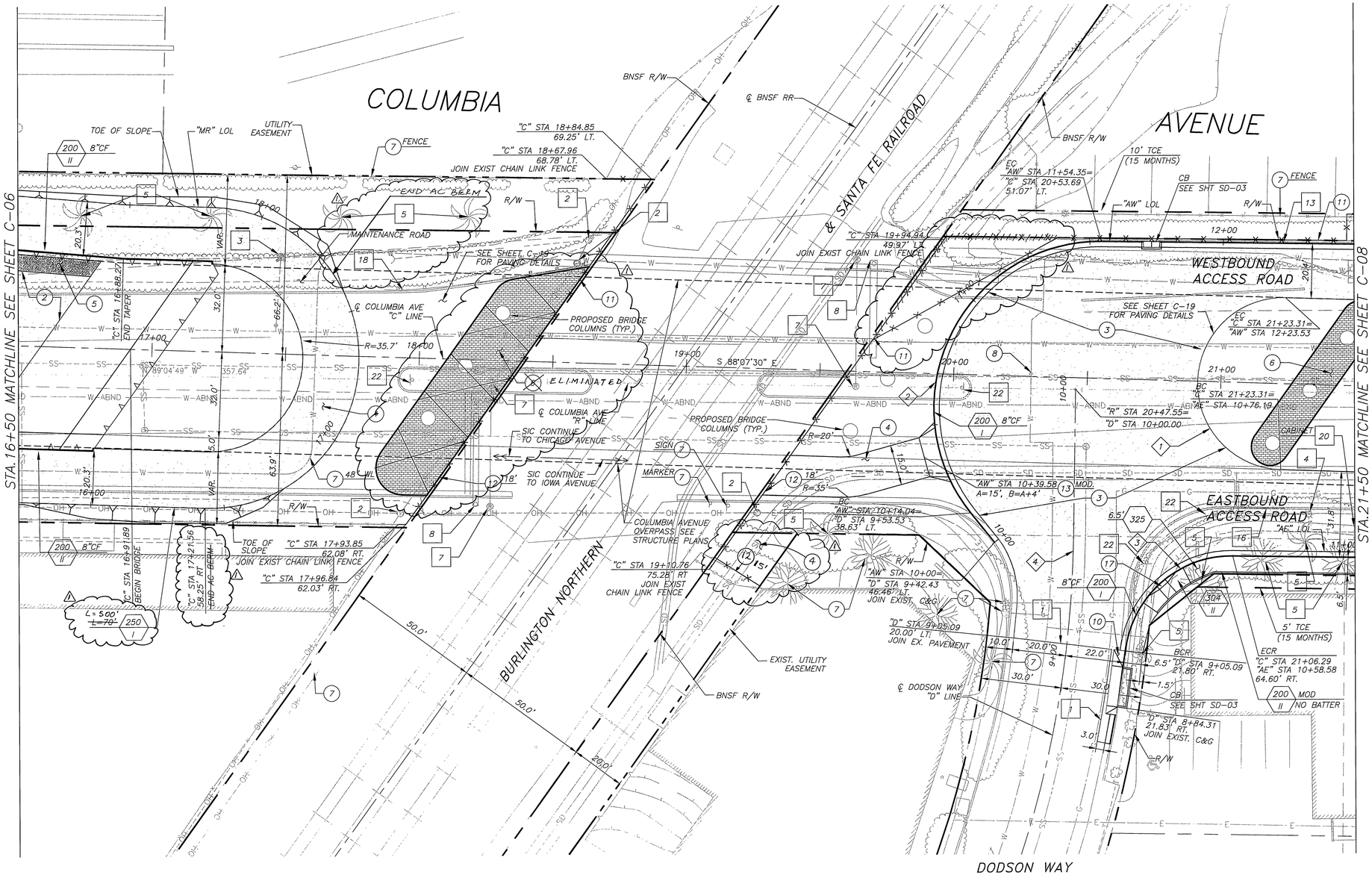

REMOVAL NOTES:

1. SAWCUT LINE
2. REMOVE POWER POLE
3. RELOCATE FIRE HYDRANT, WATER METER OR WATER FACILITIES (BY CITY PUBLIC UTILITIES)
4. REMOVE STREET LIGHT AND STREET LIGHT PULL BOXES
5. REMOVE TREE
7. REMOVE GRADE CROSSING GATE (BY OTHERS)
8. REMOVE GRADE CROSSING SIGNAL (BY OTHERS)
13. REMOVE FENCE
16. REMOVE EXISTING DRAINAGE INLET
18. REMOVE MBGR
22. RELOCATE SIGN TO NEW LOCATION APPROVED BY ENGINEER

CONSTRUCTION NOTES:

2. CONSTRUCT AC PAVEMENT (0.55' HMA ON 1.05' AB)
3. CONSTRUCT AC PAVEMENT (0.40' HMA ON 0.60' AB ON 0.75' AS)
4. CONSTRUCT AC PAVEMENT (0.40' HMA ON 0.70' AB)
5. CONSTRUCT 4" AC PAVEMENT
6. CONSTRUCT STAMPED CONCRETE (PATTERN AND COLOR TO MATCH EXISTING MEDIAN ON CHICAGO AVENUE)
7. PROTECT IN PLACE
8. ADJUST TO GRADE
10. CONSTRUCT FULL DEPTH AC ON COMPACTED SUBGRADE (1.30' HMA)
11. CONSTRUCT 6' CHAIN LINK FENCE PER STD. DWG. NO. 380
12. CONSTRUCT DRIVE GATE PER STD. DWG. NO. 380
13. CONSTRUCT DRIVEWAY PER STD. DWG. NO. 302 TYPE CURB-I. (SEE PLAN FOR DETAILS)
17. CONSTRUCT DETECTABLE WARNING SURFACE PER CALTRANS STD. PLAN A88A

LEGEND:

- ASPHALT CONCRETE
- FULL DEPTH AC
- STAMPED CONCRETE
- RETAINING WALL

CURVE DATA

CURVE	R	Δ	L	T
1	32.00'	180°00'00"	100.53'	–
2	62.00'	129°39'58"	140.31'	131.95'
3	40.00'	83°54'58"	58.58'	35.96'
4	400.00'	17°58'43"	125.51'	63.28'

NOTES:

1. STATIONING IS BASED ON COLUMBIA AVENUE (RECORD CENTERLINE) "R" OR (CONSTRUCTION CENTERLINE) "C" LINE.
2. FOR LIMITS OF RETAINING WALLS, SEE PLAN SHEET S-101 TO S-107
3. SIDEWALK SHALL BE 6.50', EXCEPT AT WALLS WHERE THE SIDEWALK SHALL BE 5.00' OR OTHERWISE NOTED ON THE PLANS.

NUMBERS ABOVE 100 IN A HEXAGON ON THE PLAN REFER TO THE CITY OF RIVERSIDE STANDARD DRAWINGS AND SHALL BE CONSTRUCTED ACCORDINGLY, UNLESS MODIFICATIONS ARE NOTED ON THE PLAN. ANY NUMBER SHOWN BELOW THE STANDARD DRAWING NUMBER INDICATES THE SPECIFIC ALTERNATE TO BE CONSTRUCTED.

N

20' 10' 0 20' 40'
GRAPHIC SCALE: 1" = 20'
HORIZ

AS BUILT
DATE 9-14-10

DMJM HARRIS | AECOM
800 NORTH HAVEN, SUITE 410
ONTARIO, CA 91764
T (909)291-8150 F (909)291-8166

REGISTERED PROFESSIONAL ENGINEER CHRIS H. BREKKE No. C 41824 Exp. 3-31-10 CIVIL STATE OF CALIFORNIA

MARK	REVISIONS	APPR.	DATE
1	AS BUILT	C.B.	9/14/10

DESIGNED BY S.A. DRAWN BY S.A. CHECKED BY C.B.

COLUMBIA AVENUE OVERPASS AT BNSF RAILROAD

PLAN-COLUMBIA AVENUE
"C" 16+50 TO "C" 21+50

SCALE: 1" = 20'

ACCT. NO. –

R-4036
C-07
SHEET 12 OF 103

FILE INFO:P:\60004223 Columbia Grade Sep\CADD\Civil\Sheet\C-07.dwg PLOTTED: Sep 29, 2008 12:41pm BY: amparos PLOT SCALE 1=40
XREFS:xbdr xtopo xutil_ex xrow_final xrd-colu, x-bridge-columbia-s, xutil_pro MODIFIED Sep 18, 2008 3:08pm

STA.21+50 MATCHLINE SEE SHEET C-07

STA.26+50 MATCHLINE SEE SHEET C-09

WESTBOUND ACCESS ROAD

EASTBOUND ACCESS ROAD

COLUMBIA AVENUE

HUNTER PARK

℄ DRIVEWAY

℄ DRIVEWAY

℄ DRIVEWAY

℄ DRIVEWAY

SEE SHEET C-18 FOR PAVING DETAILS BELOW BRIDGE

"C" STA 21+88.33 A=64.0'

"C" STA 22+42.48 ANGLE POINT

"C" STA 22+61.89 END BRIDGE

"C" STA 23+09.66 A=83.0'

"C" STA 25+14.22 A=86.0', B=A+4'

"C" STA 25+04.96 ANGLE POINT

"C" STA 24+89.72 ANGLE POINT

"C" STA 24+60.69

"C" STA 24+97.60

"C" STA 25+71.04 A=72'

"C" STA 23+30.27 =292'

"AE" LOL

"AW" LOL

R/W

TCE (15 MONTHS)

10' TCE (15 MONTHS)

RETAINING WALL NO.3 SEE STRUCTURE PLANS

RETAINING WALL NO.3 SEE STRUCTURE PLANS

8"CF 200 1

CB SEE SHT SD-02

CB SEE SHT SD-02

TO FROM

COLUMBIA AVE OVERPASS SEE STRUCTURES PLANS

℄ COLUMBIA AVE "C" LINE

℄ COLUMBIA AVE "R" LINE

SIC CONTINUE TO CHICAGO AVENUE

SIC CONTINUE TO IOWA AVENUE

PEDESTAL

200 MOD II NO BATTER

200 MATCH EX. II CURB HEIGHT

CURB

SEE SHEET PD-02 FOR PARKING LOT STRIPING

VAULT

GAS

12" WL

48" WL

S 88°07'30" E

N 89°09'58" W

S 88°20'51" E

N 88°40'47" W

22+00

23+00

24+00

25+00

26+00

12+00

13+00

14+00

15+00

16+00

17+00

18+00

19+00

VARIES

6.0'

37.0'

21.0'

12.5'

9.0'

11.0'

14.5'

4.0'

6.5'

9.5'

6.5'

10.0'

12.0'

REMOVAL NOTES:

1. SAW CUT
2. REMOVE POWER POLE
3. RELOCATE FIRE HYDRANT, WATER METER OR WATER FACILITIES (BY CITY PUBLIC UTILITIES)
4. REMOVE STREET LIGHT AND STREET LIGHT PULL BOXES
5. REMOVE TREE
9. REMOVE STRUCTURE
12. RELOCATE PALM TREE TO NEW LOCATION APPROVED BY ENGINEER
13. REMOVE FENCE
14. RELOCATE BUSINESS SIGN TO NEW LOCATION APPROVED BY ENGINEER
17. REMOVE EXISTING DRAINAGE CONDUIT
19. REMOVE GATE
20. RELOCATE (AT&T) TELEPHONE FACILITY (BY OTHERS)
22. RELOCATE SIGN TO NEW LOCATION APPROVED BY ENGINEER
32. REMOVE WATER METER AND ABANDON WATER SERVICE LINE (BY CITY PUBLIC UTILITY)
33. RELOCATE EXISTING PRIVATE FIRE HYDRANT TO NEW LOCATION SHOWN, PER NFPA 24–STANDARD FOR INSTALLATION OF PRIVATE FIRE SERVICE MAINS AND THEIR APPURTENANCES. CONTRACTOR TO SUBMIT WORKING PLANS TO THE ENGINEER FOR APPROVAL BY THE CITY'S FIRE DEPARTMENT. SEE THE REFERENCE DOCUMENTS SECTION OF THE PROJECT SPECIFICATIONS FOR THE RECORD DRAWING OF THE EXISTING FIRE HYDRANT PLUMBING.
36. RELOCATE 10" FIRE SERVICE TO STA 25+67. EXACT LOCATION TO BE DETERMINED IN THE FIELD AND COORDINATED WITH RPU WATER DIVISION.
37. RELOCATE 4" FIRE SERVICE TO STA 24+63. EXACT LOCATION TO BE DETERMINED IN THE FIELD AND COORDINATED WITH RPU WATER DIVISION.
38. REMOVE EXISTING ISLAND
39. REMOVE EXISTING TRASH ENCLOSURE
40. REMOVE EXISTING LONGITUDINAL GUTTER PER PLAN

CONSTRUCTION NOTES:

2. CONSTRUCT AC PAVEMENT (0.55' HMA ON 1.05' AB)
3. CONSTRUCT AC PAVEMENT (0.40' HMA ON 0.60' AB ON 0.75' AS)
5. CONSTRUCT 4" AC PAVEMENT
6. CONSTRUCT STAMPED CONCRETE (PATTERN AND COLOR TO MATCH EXISTING MEDIAN ON CHICAGO AVENUE)
7. PROTECT IN PLACE
8. ADJUST TO GRADE
9. CONSTRUCT TYPE 60D BARRIER PER CALTRANS STD. PLAN A76A
11. CONSTRUCT 6' CHAIN LINK FENCE PER STD. DWG. NO. 380
12. CONSTRUCT DRIVE GATE PER STD. DWG. NO. 380
13. CONSTRUCT DRIVEWAY PER STD. DWG. NO. 302 TYPE CURB-I. (SEE PLAN FOR DETAILS)
18. CONSTRUCT AC PAVEMENT (SEE PLAN FOR THICKNESS)
22. CONSTRUCT CHAINLINK ROLLING GATE AS DIRECTED IN THE SPECIFICATIONS (SEE PLAN FOR WIDTH)
23. INSTALL GUARD POST PER DETAIL ON SHEET C-20
33. ~~CONSTRUCT SLURRY SEAL~~
34. CONSTRUCT 4" AC OVER 4" AB
35. CONSTRUCT 12'x10' "BASIC ENCLOSURE" PER CITY TRASH ENCLOSURE STANDARDS

LEGEND:

- ASPHALT CONCRETE
- FULL DEPTH AC
- STAMPED CONCRETE
- SLURRY SEAL
- RETAINING WALL

NOTES:

1. STATIONING IS BASED ON COLUMBIA AVENUE (RECORD CENTERLINE) "R" OR (CONSTRUCTION CENTERLINE) "C" LINE.
2. FOR LIMITS OF RETAINING WALLS, SEE PLAN SHEET S-101 TO S-107
3. SIDEWALK SHALL BE 6.50', EXCEPT AT WALLS WHERE THE SIDEWALK SHALL BE 5.00' OR OTHERWISE NOTED ON THE PLANS.

NUMBERS ABOVE 100 IN A HEXAGON ON THE PLAN REFER TO THE CITY OF RIVERSIDE STANDARD DRAWINGS AND SHALL BE CONSTRUCTED ACCORDINGLY, UNLESS MODIFICATIONS ARE NOTED ON THE PLAN. ANY NUMBER SHOWN BELOW THE STANDARD DRAWING NUMBER INDICATES THE SPECIFIC ALTERNATE TO BE CONSTRUCTED.

N

GRAPHIC SCALE: 20' 10' 0 20' 40' 1" = 20' HORIZ

AS BUILT
DATE 9-14-10

DMJM HARRIS | AECOM
800 NORTH HAVEN, SUITE 410
ONTARIO, CA 91764
T (909)291-8150 F (909)291-8166

REGISTERED PROFESSIONAL ENGINEER CHRIS H. BRETZ No. C41824 Exp. 3-31-10 CIVIL STATE OF CALIFORNIA

MARK	REVISIONS	APPR.	DATE
2	AS BUILT	F.R.	9/14/10
1	REVISED DWY AT CAP PROPERTY & HUNTER PARK	C.B.	6-10-09
2	REVISED PARKING STALLS, RELOCATE FIRE HYDRANT, REMOVE LONGITUDINAL GUTTER, REMOVE AND CONSTRUCT NEW TRASH ENCLOSURE, PAVE PARKING LOT	C.B.	5-20-09
	REMOVE AND CONSTRUCT NEW ADA RAMP		
1	REVISED NUMBER OF PARKING STALLS FROM 10 TO 11	C.B.	11-20-08

DESIGNED BY S.A. DRAWN BY S.A. CHECKED BY C.B.

COLUMBIA AVENUE OVERPASS AT BNSF RAILROAD

PLAN–COLUMBIA AVENUE "C" 21+50 TO "C" 26+50

SCALE: 1" = 20'

ACCT. NO. –

R-4036

C-08

SHEET 13 A OF 103

FILE INFO:P:\60004223 Columbia Grade Sep\CADD\Civil\RH-Design Sketch\060504\C-08.dwg PLOTTED: Sep 03, 2010 3:20pm BY:seofrem PLOT SCALE: 1:=40
XREFS:xbdr: xtopo: xutil_exc: xrow_final: xrd-colu: xutil_pro: xparking_mod walkway: xLIVE-STEAMERS-TOPO2 MODIFIED: Jul 07, 2009 4:01pm

STA.21+50 MATCHLINE SEE SHEET C-07

STA.26+50 MATCHLINE SEE SHEET C-09

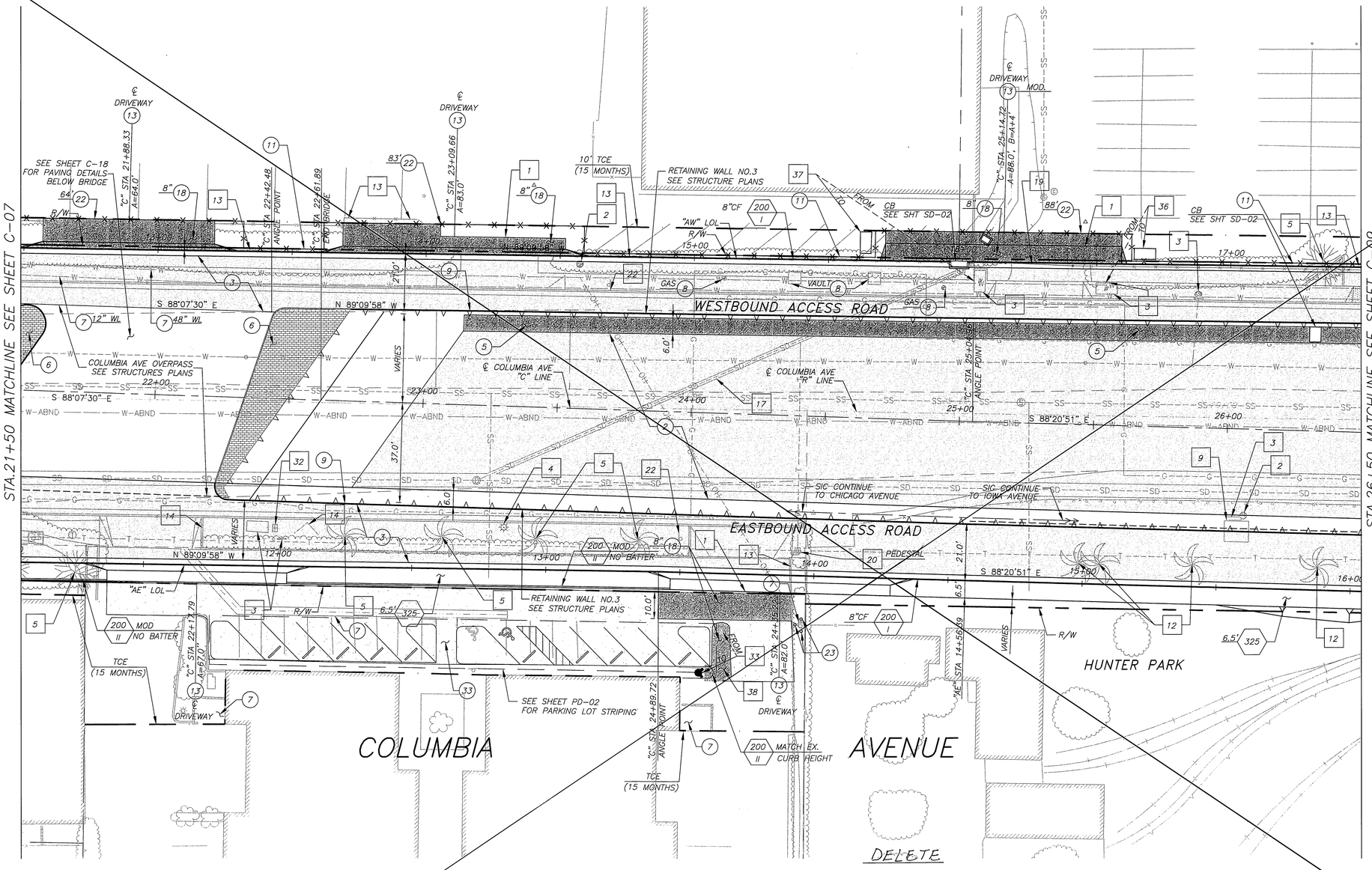

DELETE
SEE SHEET 13A

REMOVAL NOTES:

1. SAW CUT
2. REMOVE POWER POLE
3. RELOCATE FIRE HYDRANT, WATER METER OR WATER FACILITIES (BY CITY PUBLIC UTILITIES)
4. REMOVE STREET LIGHT AND STREET LIGHT PULL BOXES
5. REMOVE TREE
9. REMOVE STRUCTURE
12. RELOCATE PALM TREE TO NEW LOCATION APPROVED BY ENGINEER
13. REMOVE FENCE
14. RELOCATE BUSINESS SIGN TO NEW LOCATION APPROVED BY ENGINEER
17. REMOVE EXISTING DRAINAGE CONDUIT
19. REMOVE GATE
20. RELOCATE (AT&T) TELEPHONE FACILITY (BY OTHERS)
22. RELOCATE SIGN TO NEW LOCATION APPROVED BY ENGINEER
32. REMOVE WATER METER AND ABANDON WATER SERVICE LINE (BY CITY PUBLIC UTILITY)
33. RELOCATE EXISTING PRIVATE FIRE HYDRANT TO NEW LOCATION SHOWN, PER NFPA 24-STANDARD FOR INSTALLATION OF PRIVATE FIRE SERVICE MAINS AND THEIR APPURTENANCES. CONTRACTOR TO SUBMIT WORKING PLANS TO THE ENGINEER FOR APPROVAL BY THE CITY'S FIRE DEPARTMENT. SEE THE REFERENCE DOCUMENTS SECTION OF THE PROJECT SPECIFICATIONS FOR THE RECORD DRAWING OF THE EXISTING FIRE HYDRANT PLUMBING.
36. RELOCATE 10" FIRE SERVICE TO STA 25+67. EXACT LOCATION TO BE DETERMINED IN THE FIELD AND COORDINATED WITH RPU WATER DIVISION.
37. RELOCATE 4" FIRE SERVICE TO STA 24+63. EXACT LOCATION TO BE DETERMINED IN THE FIELD AND COORDINATED WITH RPU WATER DIVISION.
38. REMOVE EXISTING ISLAND

CONSTRUCTION NOTES:

2. CONSTRUCT AC PAVEMENT (0.55' HMA ON 1.05' AB)
3. CONSTRUCT AC PAVEMENT (0.40' HMA ON 0.60' AB ON 0.75' AS)
5. CONSTRUCT 4" AC PAVEMENT
6. CONSTRUCT STAMPED CONCRETE (PATTERN AND COLOR TO MATCH EXISTING MEDIAN ON CHICAGO AVENUE)
7. PROTECT IN PLACE
8. ADJUST TO GRADE
9. CONSTRUCT TYPE 60D BARRIER PER CALTRANS STD. PLAN A76A
11. CONSTRUCT 6' CHAIN LINK FENCE PER STD. DWG. NO. 380
12. CONSTRUCT DRIVE GATE PER STD. DWG. NO. 380
13. CONSTRUCT DRIVEWAY PER STD. DWG. NO. 302 TYPE CURB-I. (SEE PLAN FOR DETAILS)
18. CONSTRUCT AC PAVEMENT (SEE PLAN FOR THICKNESS)
22. CONSTRUCT CHAINLINK ROLLING GATE AS DIRECTED IN THE SPECIFICATIONS (SEE PLAN FOR WIDTH)
23. INSTALL GUARD POST PER DETAIL ON SHEET C-20
33. CONSTRUCT SLURRY SEAL

LEGEND:

- ASPHALT CONCRETE
- FULL DEPTH AC
- STAMPED CONCRETE
- SLURRY SEAL
- RETAINING WALL

NOTES:

1. STATIONING IS BASED ON COLUMBIA AVENUE (RECORD CENTERLINE) "R" OR (CONSTRUCTION CENTERLINE) "C" LINE.
2. FOR LIMITS OF RETAINING WALLS, SEE PLAN SHEET S-101 TO S-107
3. SIDEWALK SHALL BE 6.50', EXCEPT AT WALLS WHERE THE SIDEWALK SHALL BE 5.00' OR OTHERWISE NOTED ON THE PLANS.

NUMBERS ABOVE 100 IN A HEXAGON ON THE PLAN REFER TO THE CITY OF RIVERSIDE STANDARD DRAWINGS AND SHALL BE CONSTRUCTED ACCORDINGLY, UNLESS MODIFICATIONS ARE NOTED ON THE PLAN. ANY NUMBER SHOWN BELOW THE STANDARD DRAWING NUMBER INDICATES THE SPECIFIC ALTERNATE TO BE CONSTRUCTED.

N

20' 10' 0 20' 40'

GRAPHIC SCALE: 1" = 20' HORIZ

DMJM HARRIS | AECOM
800 NORTH HAVEN, SUITE 410
ONTARIO, CA 91764
T (909)291-8150 F (909)291-8166

REGISTERED PROFESSIONAL ENGINEER CHRIS H. BRIEPLY No. C41824 Exp. 3-31-10 CIVIL STATE OF CALIFORNIA

MARK	REVISIONS	APPR.	DATE

DESIGNED BY S.A. DRAWN BY S.A. CHECKED BY C.B.

COLUMBIA AVENUE OVERPASS AT BNSF RAILROAD

PLAN-COLUMBIA AVENUE "C" 21+50 TO "C" 26+50

SCALE: 1" = 20'

ACCT. NO. -

R-4036

C-08

SHEET 13 OF 103

FILE INFO:P:\600DK223 Columbia Grade Sep\CADD\Civil\Sheet\C-08.dwg PLOTTED: Sep 29, 2008 12:40pm BY amporos PLOT SCALE: 1=40
XREFS:xbdr: xtopo; xutil_ex; xrow_lfnol; xrd-colu; xutil_proz; xparking_stalls MODIFIED: Sep 18, 2008 3:08pm

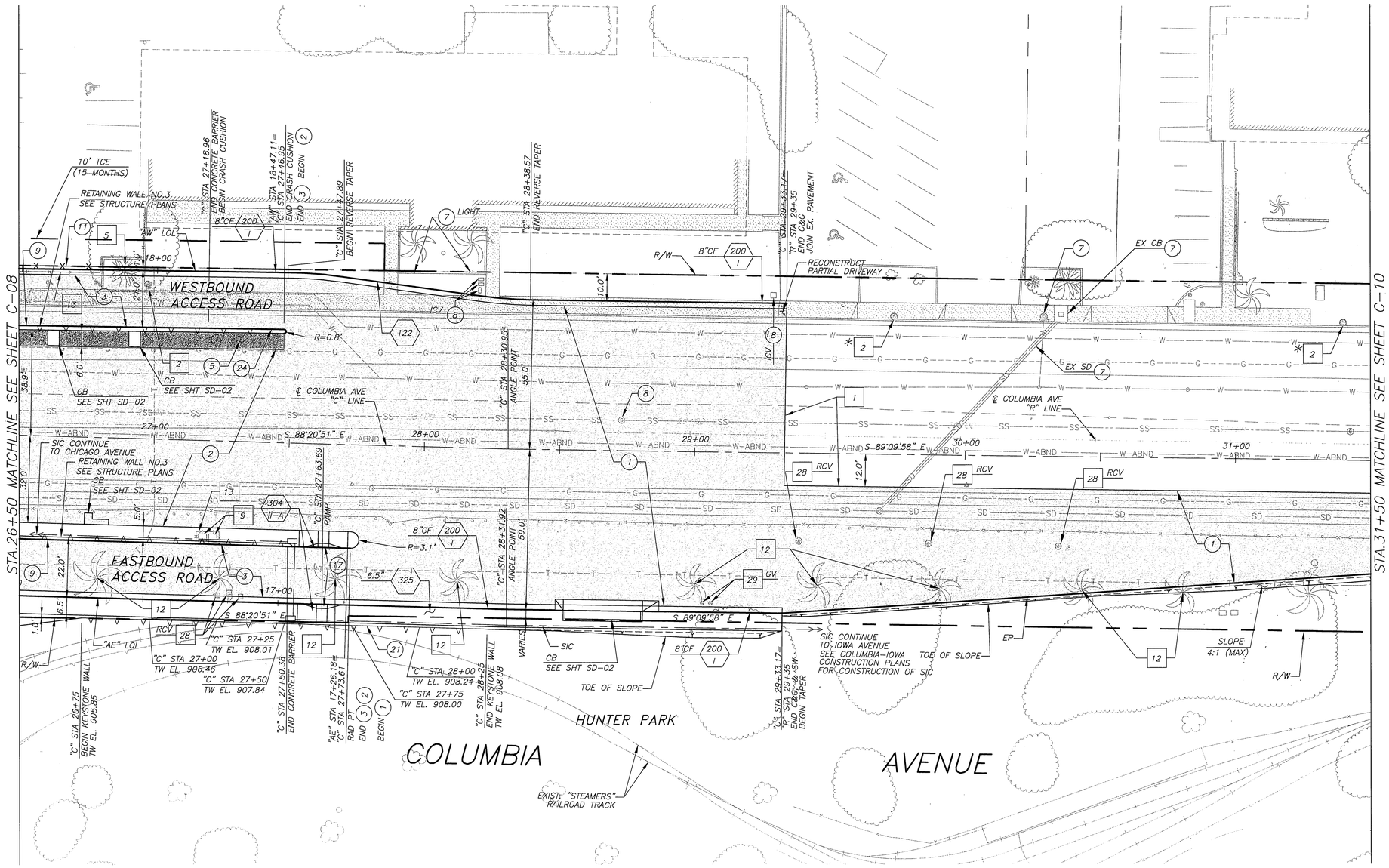

REMOVAL NOTES:

1. SAWCUT LINE
2. REMOVE POWER POLE
5. REMOVE TREE
9. REMOVE STRUCTURE
12. RELOCATE PALM TREE TO NEW LOCATION APPROVED BY ENGINEER
13. REMOVE FENCE
28. RELOCATE RCV
29. RELOCATE GATE VALVE

CONSTRUCTION NOTES:

1. CONSTRUCT AC PAVEMENT (0.55' HMA ON 0.90' AB ON 1.10' AS)
2. CONSTRUCT AC PAVEMENT (0.55' HMA ON 1.05' AB)
3. CONSTRUCT AC PAVEMENT (0.40' HMA ON 0.60' AB ON 0.75' AS)
5. CONSTRUCT 4" AC PAVEMENT
7. PROTECT IN PLACE
8. ADJUST TO GRADE
9. CONSTRUCT TYPE 60D BARRIER PER CALTRANS STD. PLAN A76A
11. CONSTRUCT 6' CHAIN LINK FENCE PER STD. DWG. NO. 380
17. CONSTRUCT DETECTABLE WARNING SURFACE PER CALTRANS STD. PLAN A88A
21. CONSTRUCT KEYSTONE GRAVITY WALL (OR APPROVED EQUAL)
24. CONSTRUCT TRINITY ATTENUATING CRASH CUSHION (TRACC), OR APPROVED EQUAL, PER MANUFACTURER'S SPECIFICATIONS TEST LEVEL=3, WIDTH=24", LENGTH=21', "GORE AREA" NOSE DELINEATION OPTION.

LEGEND:

- ASPHALT CONCRETE
- FULL DEPTH AC
- RETAINING WALL
- * FOR ELECTRICAL AND STREET LIGHTING FACILITIES CONSTRUCTION EAST OF "C" STA 29+33.17, SEE "ELECTRICAL PLANS".

NOTES:

A. SEE SHEET C-22 FOR "STEAMERS" RAIL TRACK PLAN & PROFILE.

B. SEE SHEET C-23 FOR "STEAMERS" RAIL STATION GRADING PLAN.

NOTES:

1. STATIONING IS BASED ON COLUMBIA AVENUE (RECORD CENTERLINE) "R" OR (CONSTRUCTION CENTERLINE) "C" LINE.
2. FOR LIMITS OF RETAINING WALLS, SEE PLAN SHEET S-101 TO S-107
3. SIDEWALK SHALL BE 6.50', EXCEPT AT WALLS WHERE THE SIDEWALK SHALL BE 5.00' OR OTHERWISE NOTED ON THE PLANS.

NUMBERS ABOVE 100 IN A HEXAGON ON THE PLAN REFER TO THE CITY OF RIVERSIDE STANDARD DRAWINGS AND SHALL BE CONSTRUCTED ACCORDINGLY, UNLESS MODIFICATIONS ARE NOTED ON THE PLAN. ANY NUMBER SHOWN BELOW THE STANDARD DRAWING NUMBER INDICATES THE SPECIFIC ALTERNATE TO BE CONSTRUCTED.

N

GRAPHIC SCALE: 1" = 20' (20' 10' 0 20' 40') HORIZ

AS BUILT

DATE 9-14-10

DMJM HARRIS | AECOM
800 NORTH HAVEN, SUITE 410
ONTARIO, CA 91764
T (909)291-8150 F (909)291-8166

REGISTERED PROFESSIONAL ENGINEER CHRIS H. BREWER No. C41624 Exp. 3-31-10 CIVIL STATE OF CALIFORNIA

MARK	REVISIONS	APPR.	DATE

DESIGNED BY S.A. DRAWN BY S.A. CHECKED BY C.B.

COLUMBIA AVENUE OVERPASS AT BNSF RAILROAD

PLAN-COLUMBIA AVENUE "C" 26+50 TO "C" 31+50

SCALE: 1" = 20'

ACCT. NO. -

R-4036

C-09

SHEET 14 OF 103

FILE INFO P:\60004223 Columbia Grade Sep\CADD\Civil\Sheet\C-09.dwg PLOTTED: Sep 29, 2008 12:39pm BY: amporos PLOT SCALE: 1=40
XREFS: xbdr: xtopo; xuil_ex; xrow_final; xrd-cdu; xuil_pro MODIFIED: Sep 18, 2008 3:08pm

STA.31+50 MATCHLINE SEE SHEET C-09

1 STORY BUILDING
1455

R/W

℄ COLUMBIA AVE
"C" LINE

℄ COLUMBIA AVE
"R" LINE

32+00 33+00 34+00 35+00 36+00 36+46.33 11+00 10+00

S 89°09'58" E

12.00'

7.15'

"C" STA 36+46.33
"N" STA 9+95.30

"R" STA 36+48.11
EX. MONUMENT
S'LY RECORD ℄
N 2309655.61
E 6231342.13

EX. MONUMENT
N'LY RECORD ℄
N 2309660.90
E 6231342.17

EP

TOE OF SLOPE

SLOPE
4:1 (MAX)

HUNTER PARK

R/W

"C" STA 34+34.92
END TAPER
19.15' RT.

"C" STA 35+62.82
19.15' RT.
JOIN EX. PAVEMENT

℄ IOWA AVE
"I" LINE

97.00'

COLUMBIA AVENUE

IOWA AVENUE

REMOVAL NOTES:

[1] SAWCUT LINE

CONSTRUCTION NOTES:

(1) CONSTRUCT AC PAVEMENT (0.55' HMA ON 0.90' AB ON 1.10' AS)

(7) PROTECT IN PLACE

LEGEND:

ASPHALT CONCRETE

NOTES:

1. STATIONING IS BASED ON COLUMBIA AVENUE (RECORD CENTERLINE) "R" OR (CONSTRUCTION CENTERLINE) "C" LINE.
2. SIDEWALK SHALL BE 6.50', EXCEPT AT WALLS WHERE THE SIDEWALK SHALL BE 5.00' OR OTHERWISE NOTED ON THE PLANS.

NUMBERS ABOVE 100 IN A HEXAGON ON THE PLAN REFER TO THE CITY OF RIVERSIDE STANDARD DRAWINGS AND SHALL BE CONSTRUCTED ACCORDINGLY, UNLESS MODIFICATIONS ARE NOTED ON THE PLAN. ANY NUMBER SHOWN BELOW THE STANDARD DRAWING NUMBER INDICATES THE SPECIFIC ALTERNATE TO BE CONSTRUCTED.

AS BUILT
DATE 9-14-10

N

20' 10' 0 20' 40'
GRAPHIC SCALE: 1" = 20'
HORIZ

DMJM HARRIS | AECOM
800 NORTH HAVEN, SUITE 410
ONTARIO, CA 91764
T (909)291-8150 F (909)291-8166

REGISTERED PROFESSIONAL ENGINEER
CHRIS H. BRESLIN
No. C 41824
Exp. 3-31-10
CIVIL
STATE OF CALIFORNIA

MARK	REVISIONS	APPR	DATE

DESIGNED BY S.A. DRAWN BY S.A. CHECKED BY C.B.

COLUMBIA AVENUE OVERPASS AT BNSF RAILROAD

PLAN-COLUMBIA AVENUE "C" 31+50 TO IOWA AVENUE

SCALE: 1" = 20'

ACCT. NO. -

R-4036
C-10

SHEET 15 OF 103

FILE INFO:P:\60004223 Columbia Grade Sep\CADD\Civil\Sheet\C-10.dwg PLOTTED: Sep 29, 2008 12:38pm BY:amporos PLOT SCALE: 1=40
XREFS: xbar, xtopo, xutil_ex, xrow_Encl, xrd-colu MODIFIED: Sep 18, 2008 3:08pm

REMOVAL NOTES:

1	SAWCUT LINE
2	REMOVE POWER POLE
3	RELOCATE FIRE HYDRANT, WATER METER OR WATER FACILITIES (BY CITY PUBLIC UTILITIES)
5	REMOVE TREE
10	RELOCATE GUY WIRE (BY OTHERS)
11	RELOCATE POWER POLE (BY OTHERS)
13	REMOVE FENCE
24	REMOVE AC DIKE
26	RELOCATE MAILBOXES TO NEW LOCATION APPROVED BY ENGINEER
32	REMOVE WATER METER AND ABANDON WATER SERVICE LINE (BY CITY PUBLIC UTILITIES)

CONSTRUCTION NOTES:

3	CONSTRUCT AC PAVEMENT (0.40' HMA ON 0.60' AB ON 0.75' AS)
4	CONSTRUCT AC PAVEMENT (0.40' HMA ON 0.70' AB)
6	CONSTRUCT STAMPED CONCRETE (PATTERN AND COLOR TO MATCH EXISTING MEDIAN ON CHICAGO AVENUE)
7	PROTECT IN PLACE
8	ADJUST TO GRADE
11	CONSTRUCT 6' CHAIN LINK FENCE PER STD. DWG. NO. 380 REMOVE TEMPORARY FENCING AFTER INSTALLATION OF PERMANENT FENCING.
12	CONSTRUCT DRIVE GATE PER STD. DWG. NO. 380
13	CONSTRUCT DRIVEWAY PER STD. DWG. NO. 302 TYPE CURB–I (SEE PLAN FOR DETAILS)
15	COLD MILL (2" DEEP) EXISTING PAVEMENT
16	CONSTRUCT AC OVERLAY (THICKNESS VARIES)
17	CONSTRUCT DETECTABLE WARNING SURFACE PER CALTRANS STD. PLAN A88A

CURVE DATA

CURVE	R	Δ	L	T
1	40.00'	89°58'58"	62.82'	39.99'
2	50.00'	89°58'46"	78.52'	49.98'
3	80.00'	89°58'58"	125.64'	77.98'
4	35.00'	90°03'42"	55.02'	35.04'
5	35.00'	89°46'20"	54.84'	34.86'
6	35.00'	89°39'39"	54.77'	34.79'
7	50.00'	109°39'39"	95.70'	70.96'
8	100.00'	10°00'00"	17.45'	8.75'
9	100.00'	10°00'00"	17.45'	8.75'
10	59.00'	89°58'54"	92.66'	58.98'

LEGEND:

- ASPHALT CONCRETE
- COLD MILL AND OVERLAY
- STAMPED CONCRETE

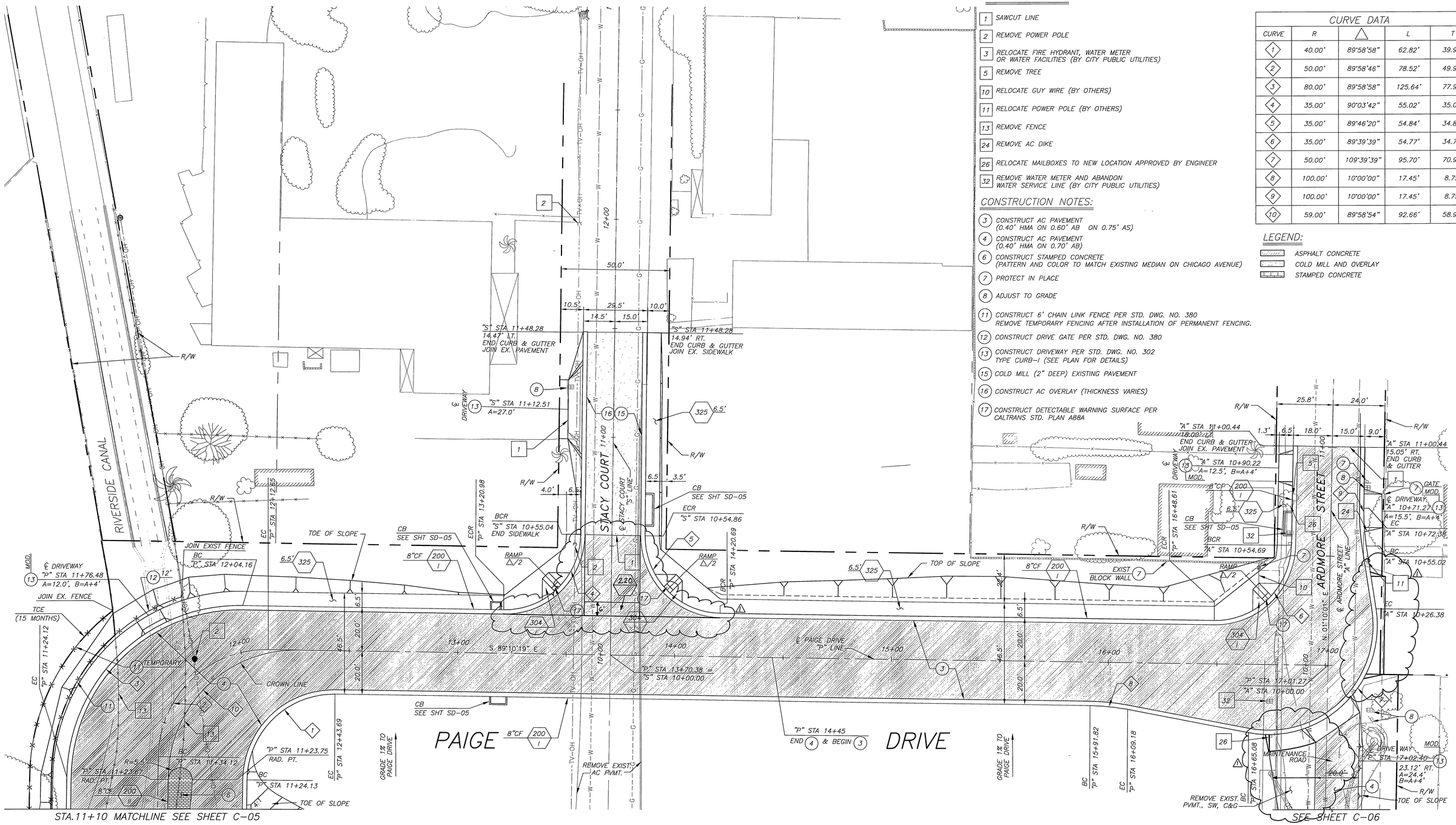

NOTES:

1. STATIONING IS BASED ON PAIGE DRIVE "P" LINE, STACY COURT "S" LINE, OR ARDMORE STREET "A" LINE.
2. SIDEWALK SHALL BE 6.50', EXCEPT AT WALLS WHERE THE SIDEWALK SHALL BE 5.00' OR OTHERWISE NOTED ON THE PLANS.
3. REMOVE EXISTING PAVEMENT, SIDEWALK AND CURB & GUTTER ON STACY COURT AND ARDMORE STREET BETWEEN COLUMBIA AVENUE AND PAIGE DRIVE.

⬡ NUMBERS ABOVE 100 IN A HEXAGON ON THE PLAN REFER TO THE CITY OF RIVERSIDE STANDARD DRAWINGS AND SHALL BE CONSTRUCTED ACCORDINGLY, UNLESS MODIFICATIONS ARE NOTED ON THE PLAN. ANY NUMBER SHOWN BELOW THE STANDARD DRAWING NUMBER INDICATES THE SPECIFIC ALTERNATE TO BE CONSTRUCTED.

N

GRAPHIC SCALE: 20' 10' 0 20' 40' — 1" = 20' HORIZ

AS BUILT
DATE 9-14-10

DMJM HARRIS | AECOM
800 NORTH HAVEN, SUITE 410
ONTARIO, CA 91764
T (909)291–8150 F (909)291–8166

REGISTERED PROFESSIONAL ENGINEER CHRIS H. BRICKEY No. C 41824 Exp. 3-31-10 CIVIL STATE OF CALIFORNIA

MARK	REVISIONS	APPR.	DATE
1	AS BUILT	F.P.	9/14/10

DESIGNED BY S.A. DRAWN BY S.A. CHECKED BY C.B.

COLUMBIA AVENUE OVERPASS AT BNSF RAILROAD

PLAN–PAIGE DRIVE
COLUMBIA AVENUE TO ARDMORE STREET

SCALE: 1" = 20'

ACCT. NO. –

R–4036
C–11
SHEET 16 OF 103

FILE: INFO_P: \60004223 Columbia Grade Sep\CADD\Civil\Sheet\C-11.dwg PLOTTED: Sep 29, 2009 10:30pm BY omparas PLOT SCALE: 1=1
XREFS: HDR: Hdrplt MAP_Arc: Arcplot Drive_Dwg: MAP_Arc DH ELEC: arc-plot MODIFIED: Sep 29, 2009 12:49pm

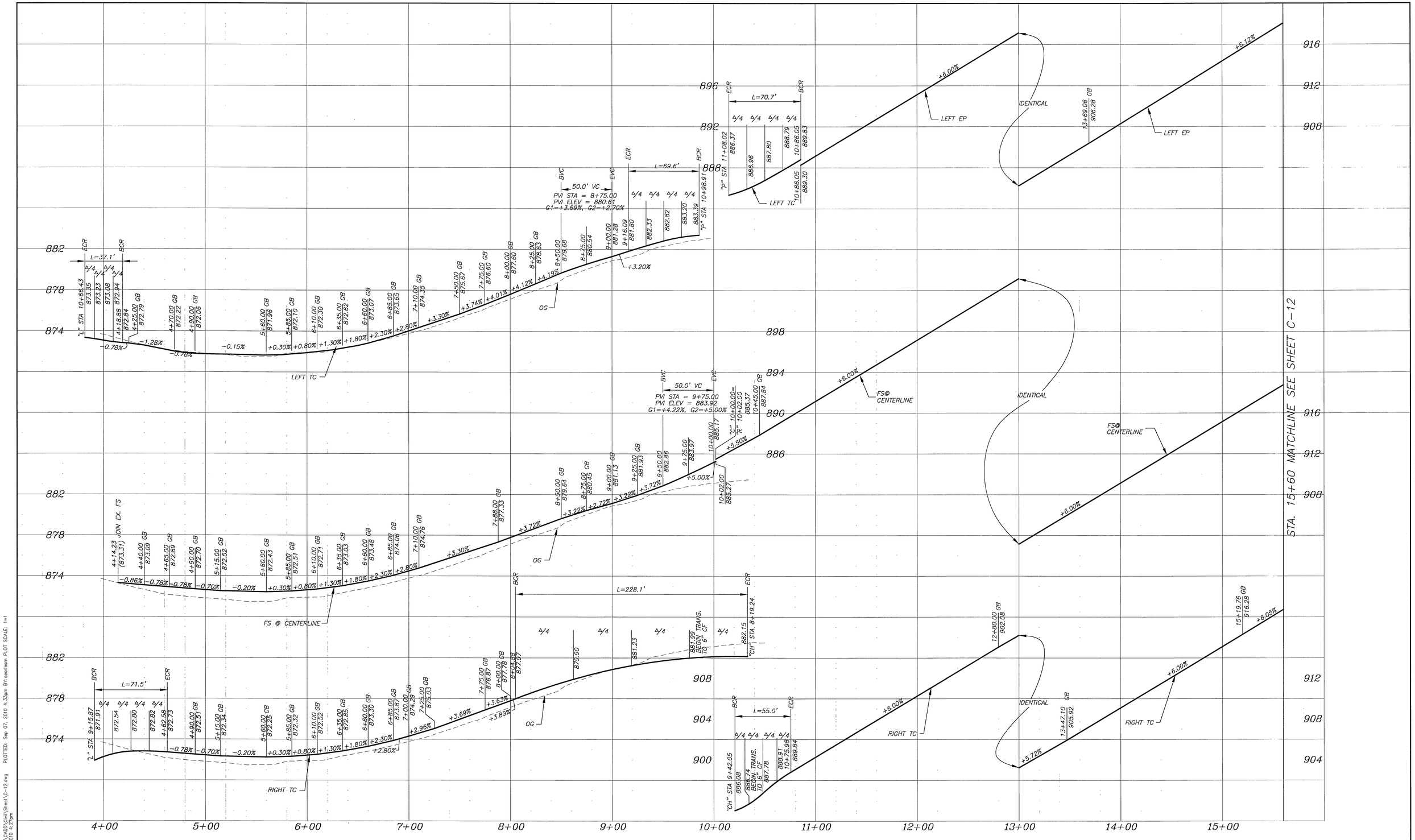

AS BUILT
DATE 9-14-10

DMJM HARRIS | AECOM
800 NORTH HAVEN, SUITE 410
ONTARIO, CA 91764
T (909)291-8150 F (909)291-8166

REGISTERED PROFESSIONAL ENGINEER
CHRIS H. BRETALLA
No. C41824
Exp. 3-31-10
CIVIL
STATE OF CALIFORNIA

MARK	REVISIONS	APPR.	DATE

DESIGNED BY S.A. DRAWN BY S.A. CHECKED BY C.B.

COLUMBIA AVENUE OVERPASS AT BNSF RAILROAD

PROFILE – COLUMBIA AVENUE
"R" 4+14.23 TO "R" 10+02
"C" 10+02 TO "C" 15+60

SCALE: HOR. 1" = 40'; VER. 1" = 4'

ACCT. NO. –

R-4036
C-12

SHEET 17A OF 103

FILE INFO:P:\60004223 Columbia Grade Sep\CADD\Civil\Sheet\C-12.dwg PLOTTED: Sep 07, 2010 4:33pm BY:searlesm PLOT SCALE: 1=1
XREFS:xbdr; xpro-colu MODIFIED: Sep 07, 2010 4:27pm

DELETE

SEE SHEET 17A

DMJM HARRIS | AECOM 800 NORTH HAVEN, SUITE 410 ONTARIO, CA 91764 T (909)291-8150 F (909)291-8166	REGISTERED PROFESSIONAL ENGINEER CHRIS H. BRETH No. C41824 Exp. 3-31-10 CIVIL STATE OF CALIFORNIA

MARK	REVISIONS	APPR	DATE

DESIGNED BY S.A. DRAWN BY S.A. CHECKED BY C.B.

COLUMBIA AVENUE OVERPASS AT BNSF RAILROAD

PROFILE – COLUMBIA AVENUE
"R" 4+14.23 TO "R" 10+02
"C" 10+02 TO "C" 15+60

SCALE: HOR 1" = 40'; VER 1" = 4'

ACCT. NO. –

R-4036
C-12

SHEET 17 OF 103

FILE INFO:P:\60004223 Columbia Grade Sep\CADD\Civil\Sheet\C-12.dwg PLOTTED Sep 29, 2008 12:52pm BY omparos PLOT SCALE 1=1
XREFS abd: xpro-colu MODIFIED: Sep 29, 2008 12:51pm

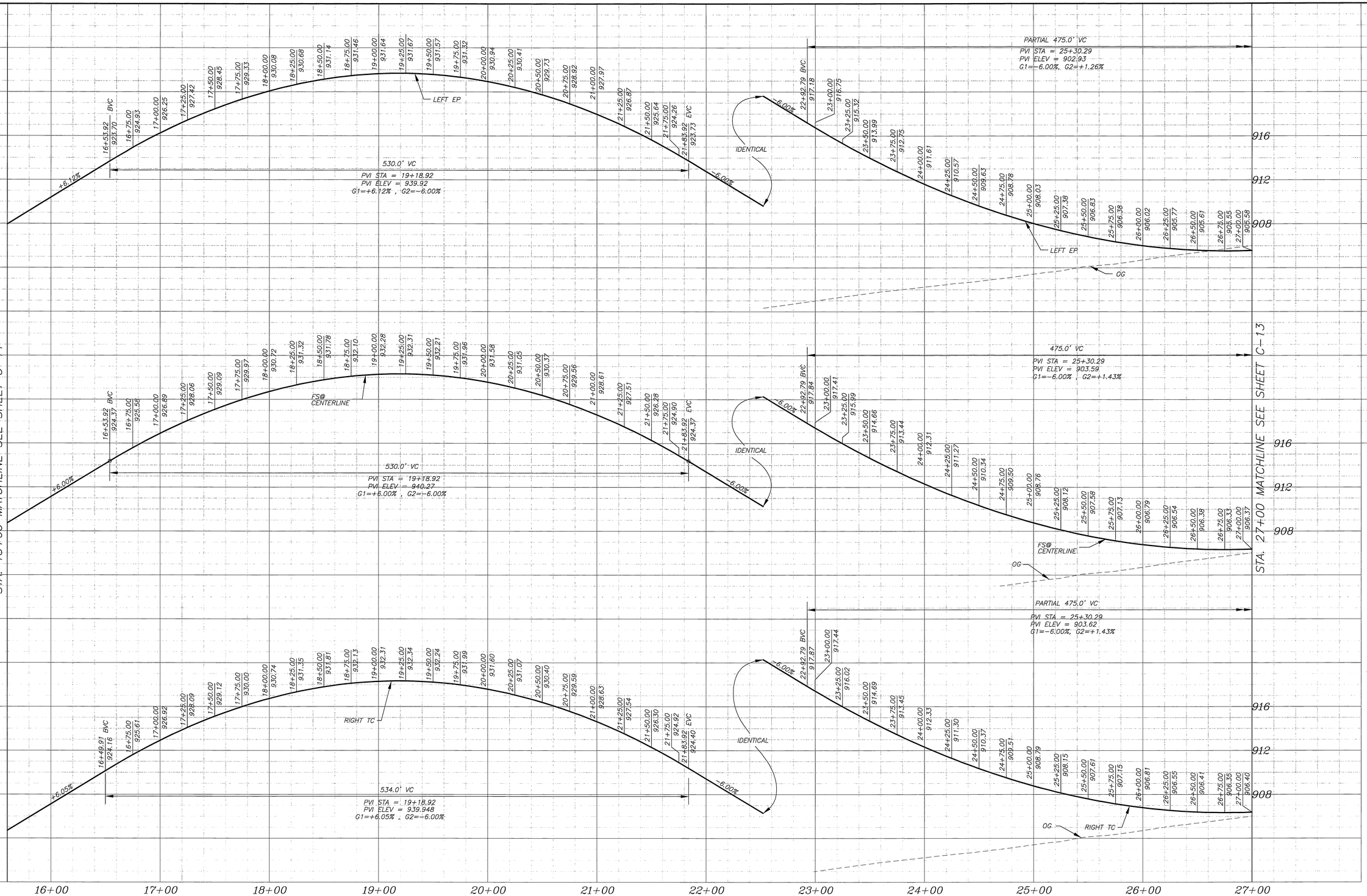

AS BUILT
DATE 9-14-10

DMJM HARRIS | AECOM
800 NORTH HAVEN, SUITE 410
ONTARIO, CA 91764
T (909)291-8150 F (909)291-8166

REGISTERED PROFESSIONAL ENGINEER
CHRIS H. BRECKLE
No. C41824
Exp. 3-31-10
CIVIL
STATE OF CALIFORNIA

MARK	REVISIONS	APPR.	DATE
1			

DESIGNED BY S.A. DRAWN BY S.A. CHECKED BY C.B.

COLUMBIA AVENUE OVERPASS AT BNSF RAILROAD

PROFILE – COLUMBIA AVENUE
"C" 15+60 TO "C" 27+00

SCALE: HOR. 1" = 40'; VER. 1" = 4'

ACCT. NO. –

R-4036
C-13
SHEET 18 OF 103

FILE INFO: P:\60004223 Columbia Grade Sep\CAD\Civil\Sheet\C-13.dwg PLOTTED: Sep 29, 2008 12:52pm BY: amparos PLOT SCALE: 1=40
REFS.xbdr: xpro-colu MODIFIED: Jul 11, 2008 1:56pm

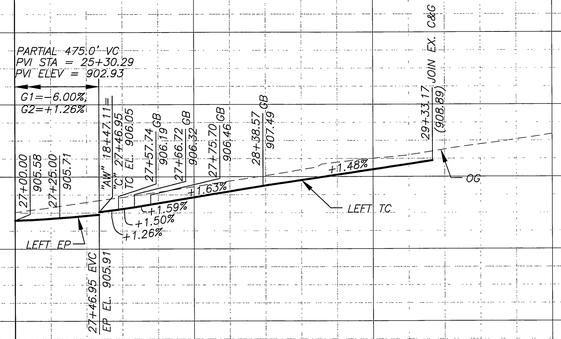

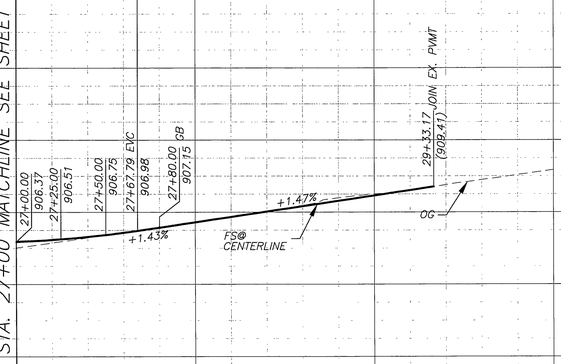

STA. 27+00 MATCHLINE SEE SHEET C-12

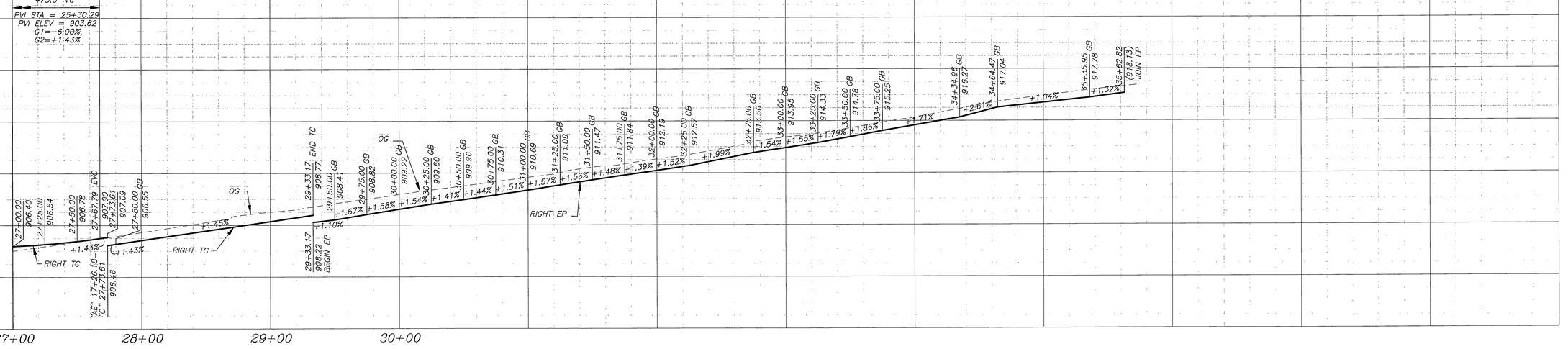

27+00 28+00 29+00 30+00

AS BUILT
DATE 9-14-10

DMJM HARRIS | AECOM
800 NORTH HAVEN, SUITE 410
ONTARIO, CA 91764
T (909)291-8150 F (909)291-8166

REGISTERED PROFESSIONAL ENGINEER
CHRIS H. BRETH, EMPIRE
No. C41824
Exp. 3-31-10
CIVIL
STATE OF CALIFORNIA

MARK	REVISIONS	APPR	DATE

DESIGNED BY S.A. DRAWN BY S.A. CHECKED BY C.B.

COLUMBIA AVENUE OVERPASS AT BNSF RAILROAD

PROFILE – COLUMBIA AVENUE
"C" 27+00 TO "C" 29+33.17

SCALE: HOR 1" = 40'; VER 1" = 4'

ACCT. NO. –

R-4036
C-14

SHEET 19 OF 103

FILE INFO.P. \60004223 Columbia Grade Sep\CADD\Civil\Sheet\C-14.dwg PLOTTED: Sep 29, 2008 12:53pm BY amporos PLOT SCALE 1=40
(REFS.xfdr: xpro-colu MODIFIED: Sep 15, 2008 11:17am

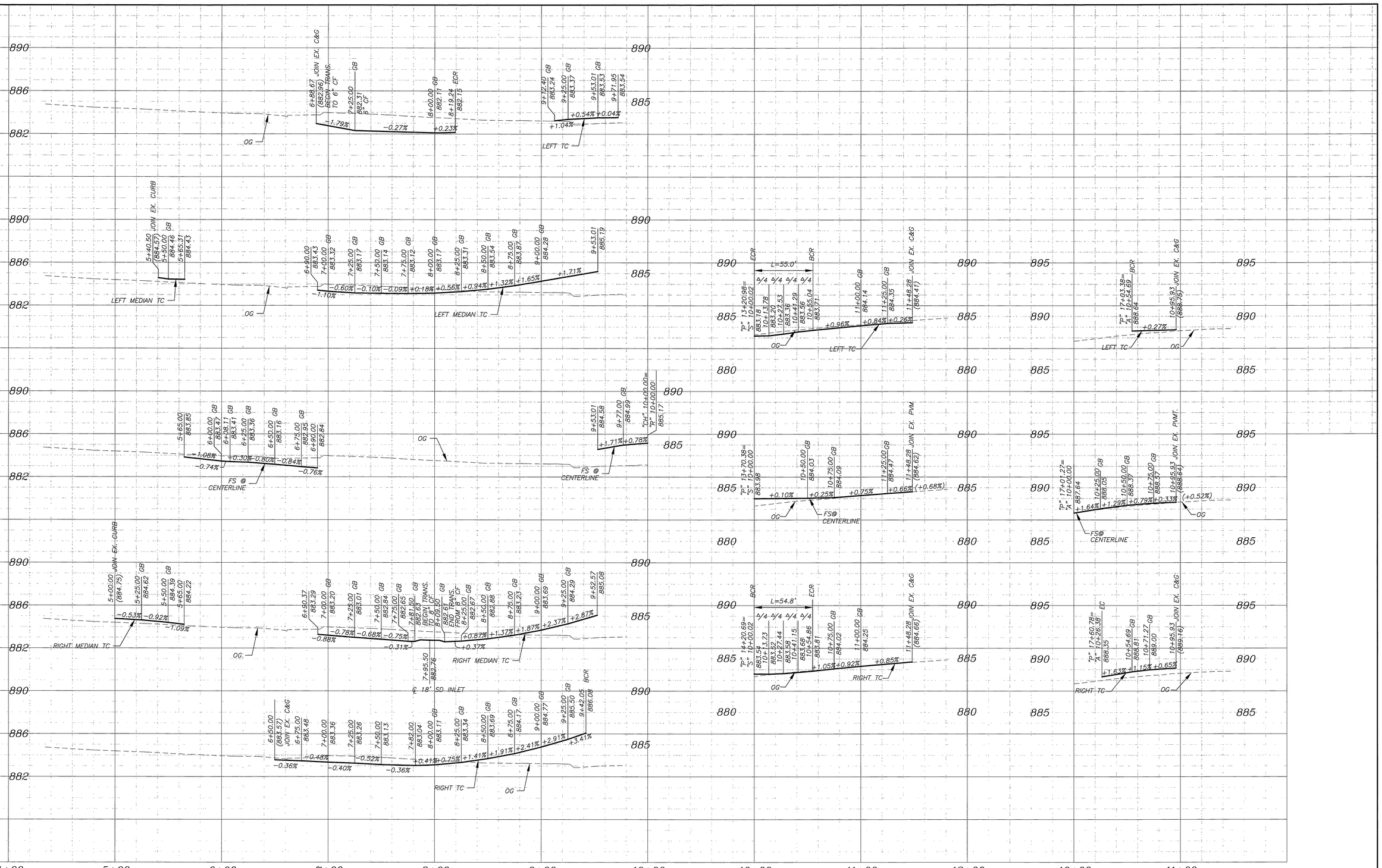

PROFILE – CHICAGO AVENUE

PROFILE – STACY COURT

PROFILE – ARDMORE STREET

AS BUILT
DATE 9-14-10

DMJM HARRIS | AECOM
800 NORTH HAVEN, SUITE 410
ONTARIO, CA 91764
T (909)291-8150 F (909)291-8166

REGISTERED PROFESSIONAL ENGINEER
CHRIS H. BREPA
No. C 41824
Exp. 3-31-10
CIVIL
STATE OF CALIFORNIA

MARK	REVISIONS	APPR	DATE

DESIGNED BY S.A. DRAWN BY S.A. CHECKED BY C.B

COLUMBIA AVENUE OVERPASS AT BNSF RAILROAD
PROFILE–CHICAGO AVE, STACY CT & ARDMORE ST
"CH" 5+00 TO "CH" 10+00
"S" 10+00 TO "S" 11+48.28
"A" 10+00 TO "A" 10+95.93

SCALE: HOR. 1" = 40'; VER. 1" = 4'

ACCT. NO. -

R-4036
C-15

SHEET 20 OF 103

FILE INFO P:\60004231 Columbia Grade Sep\CADD\Civil\Sheet\C-15.dwg PLOTTED Sep 29, 2008 12:53pm BY:amoreos PLOT SCALE 1=40
XREFS: xbar xpro-chic xpro-stacy_ardmore MODIFIED Sep 15, 2008 11:17am

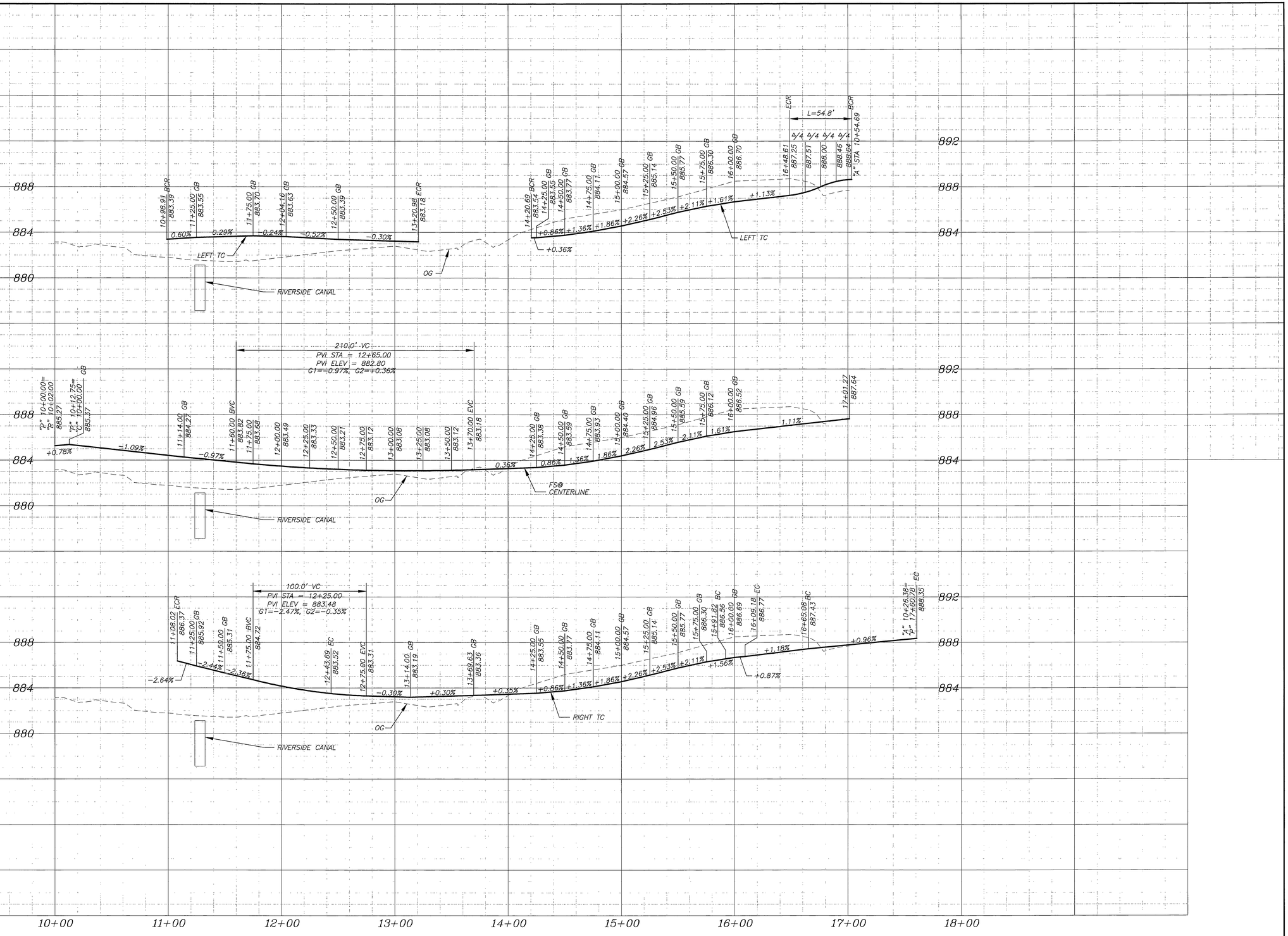

AS BUILT

DATE 9-14-10

DMJM HARRIS | AECOM
800 NORTH HAVEN, SUITE 410
ONTARIO, CA 91764
T (909)291-8150 F (909)291-8166

REGISTERED PROFESSIONAL ENGINEER
CHRIS H. BRESLIN
No. C 41824
Exp. 3-31-10
CIVIL
STATE OF CALIFORNIA

MARK	REVISIONS	APPR.	DATE

DESIGNED BY S.A. DRAWN BY S.A. CHECKED BY C.B

COLUMBIA AVENUE OVERPASS AT BNSF RAILROAD

PROFILE– PAIGE DRIVE
"P" 10+00 TO "P" 17+60.78

SCALE: HOR 1" = 40'; VER 1" = 4'

ACCT. NO. –

R–4036
C–16

SHEET 21 OF 103

FILE INFO: P:\60004223 Columbia Grade Sep\CADD\Civil\Sheet\C-16.dwg PLOTTED: Sep 29, 2008 12:54pm BY amparas PLOT SCALE 1=40
XREFS: xbdr xpro-paige MODIFIED: Jul 11, 2008 1:56pm

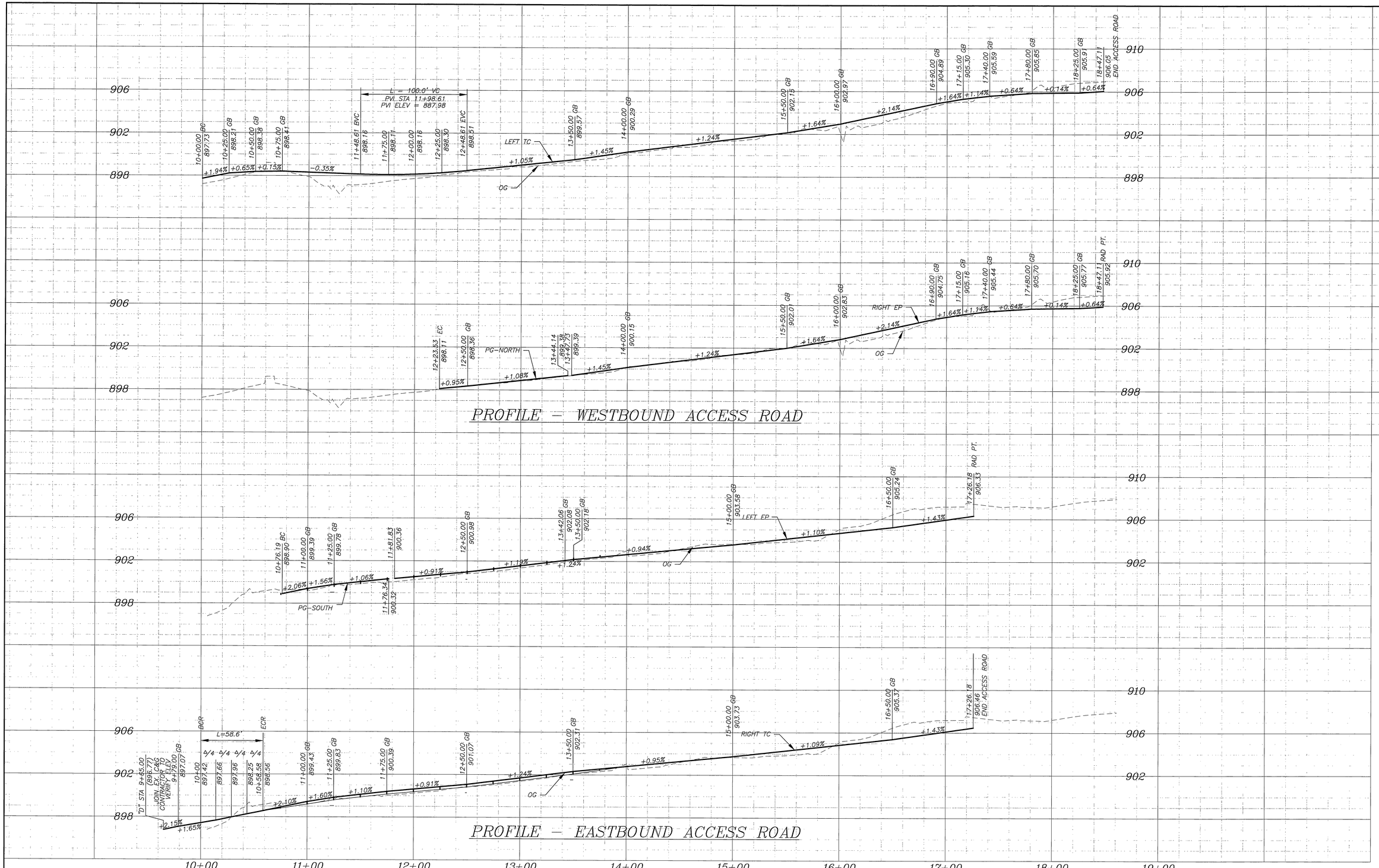

PROFILE – WESTBOUND ACCESS ROAD

PROFILE – EASTBOUND ACCESS ROAD

AS BUILT
DATE 9-14-10

DMJM HARRIS | AECOM
800 NORTH HAVEN, SUITE 410
ONTARIO, CA 91764
T (909)291-8150 F (909)291-8166

REGISTERED PROFESSIONAL ENGINEER
CHRIS H. BRETALL
No. C41824
Exp. 3-31-10
CIVIL
STATE OF CALIFORNIA

MARK	REVISIONS	APPR.	DATE

DESIGNED BY S.A. DRAWN BY S.A. CHECKED BY C.B.

COLUMBIA AVENUE OVERPASS AT BNSF RAILROAD
PROFILE – WESTBOUND ACCESS ROAD
& EASTBOUND ACCESS ROAD
"AW" 10+00 TO "AW" 18+47.11
"AE" 10+00 TO "AE" 17+26.18

SCALE: HOR. 1" = 40'; VER. 1" = 4'

ACCT. NO. –

R-4036
C-17

SHEET 22 OF 103

FILE INFO:P:\60004223 Columbia Grade Sep\CADD\Civil\Sheet\C-17.dwg PLOTTED: Sep 29, 2008 12:54pm BY:amparos PLOT SCALE: 1=40
<REFS xbdr, xpro-dods MODIFIED: Sep 15, 2008 11:17am

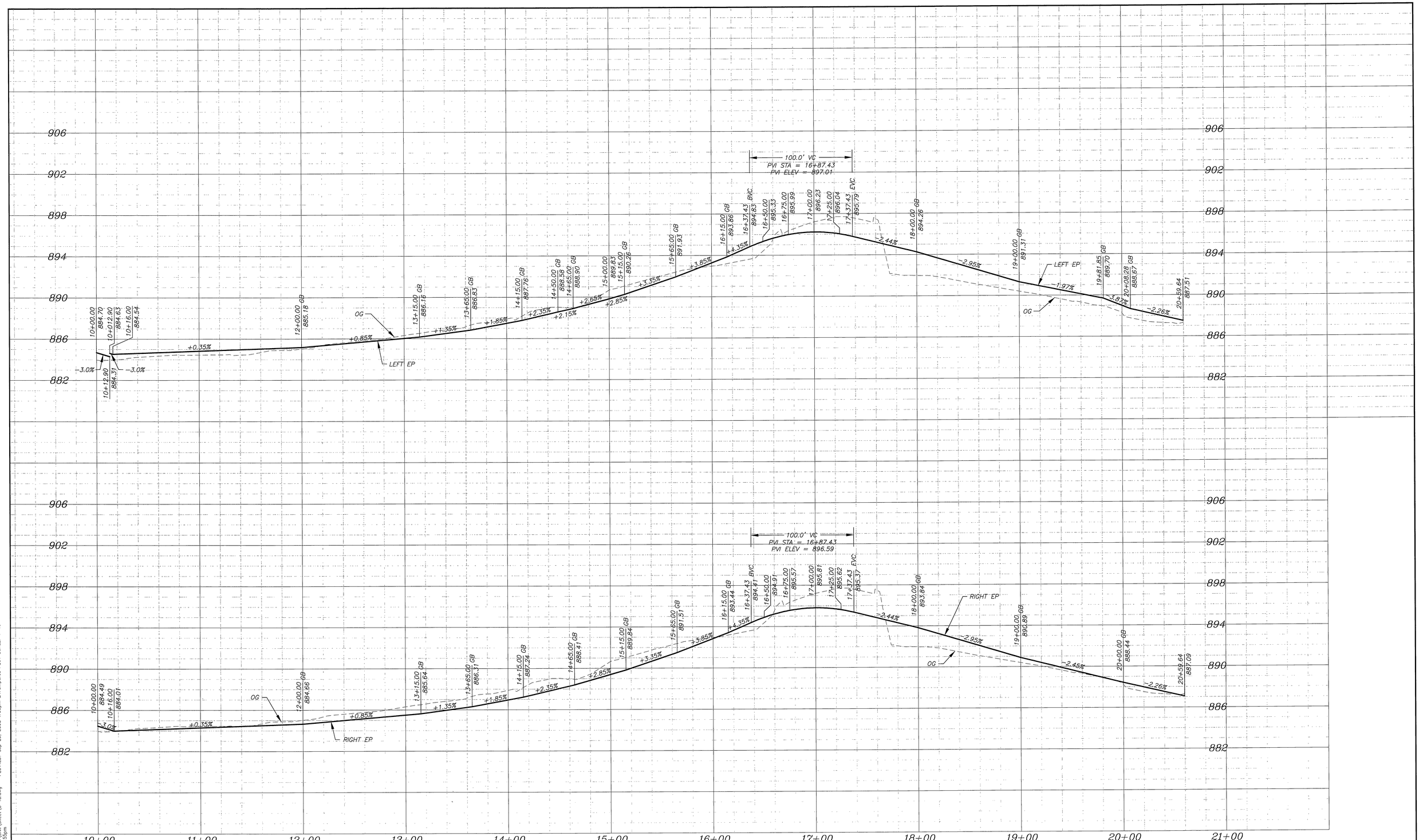

AS BUILT
DATE 9-14-10

DMJM HARRIS | AECOM
800 NORTH HAVEN, SUITE 410
ONTARIO, CA 91764
T (909)291-8150 F (909)291-8166

REGISTERED PROFESSIONAL ENGINEER
CHRIS H. BRETAL
No. C41824
Exp. 3-31-10
CIVIL
STATE OF CALIFORNIA

MARK	REVISIONS	APPR	DATE

DESIGNED BY S.A. DRAWN BY S.A. CHECKED BY C.B.

COLUMBIA AVENUE OVERPASS AT BNSF RAILROAD

PROFILE – MAINTENANCE ROAD
"MR" 10+00 TO "MR" 20+59.64

SCALE: HOR. 1" = 40'; VER. 1" = 4'

ACCT. NO. –

R-4036
C-18

SHEET 23 OF 103

FILE INFO: P:\60004223 Columbia Grade Sep\CADD\Civil\Sheet\C-18.dwg PLOTTED: Sep 29, 2008 1:00pm BY: amparos PLOT SCALE: 1=40
GREFS: xbdr: xpro-mntc MODIFIED: Jul 11, 2008 1:55pm

PAIGE DRIVE

N 00°50'43" E

℄ PAIGE DRIVE "P" LINE

CROWN LINE (SEE SHEET C-05)

6.0'

882.27 | 882.98 | 883.86 | 884.84 | 885.87 | 886.84 | 887.85 | 888.76 BCR

881.26 ECR | 882.31 | 883.07 | 883.96 | 884.94 | 885.98 | 886.98 | 888.00 | 888.40 | 888.58 | 888.94

881.44

19.2'

881.44 | 881.63 | 882.41 | 883.26 | 884.16 | 885.15 | 886.22 | 887.27 | 888.35 | 888.98 | 889.34

COLUMBIA AVENUE

20.0'

10.0'

881.63 | 881.81 | 882.60 | 883.46 | 883.66 | 884.37 | 885.37 | 886.47 | 887.57 | 888.17 | 889.38 | 889.74

℄ COLUMBIA AVE "C" LINE

S 89°09'17" E

CROWN LINE (SEE SHEET C-05)

881.70

881.86

883.47

"C" STA 10+00
"P" STA 10+12.75

882.38 | 7.1' | 882.65 | 4.1'

888.74

CROWN LINE (SEE SHEET C-05)

20.0'

881.59 | 881.77 | 882.53 | 883.32 | 884.21 | 885.21 | 886.23 | 887.27 | 888.47 | 889.42

13.8'

"R" 9+00.00
881.50
TC ELEV

"R" 8+93.56
881.32
TC ELEV

880.44
TC ELEV

881.49 | 881.67

℄ RAMP
"R" 9+42.04
23.00' RT.
FS EL. 882.31

882.43

"R" 9+52.07
883.33
TC ELEV

883.21 | 884.10 | 885.10 | 886.06 | 887.06 | 888.18 | 889.14 ECR

20' TYP | 20' TYP

16.0'

5.9'

"R" 9+25.00
882.31
TC ELEV

3.63%

8

8.0'

"CH" 9+71.95
883.54
TC ELEV

0.13%

℄ RAMP
"CH" STA 9+60.90
42.92' LT.
FS EL. 882.87

8.6'

7

8.33%

△/2
881.49
TC ELEV

200 II 8" CF

R=4.0'

℄ RAMP
"R" 9+29.33
57.68' RT.
FS EL. 880.92

7

28

882.54
TC ELEV

CHICAGO AVENUE

N

10' 5' 0 10' 20'

GRAPHIC SCALE: 1" = 10' HORIZ

AS BUILT
DATE 9-14-10

CONSTRUCTION NOTES:

(7) PROTECT IN PLACE

(28) CONSTRUCT 4" C.I. PIPE CURB DRAIN PER APWA STD. PLAN 150-2

DMJM HARRIS | AECOM
800 NORTH HAVEN, SUITE 410
ONTARIO, CA 91764
T (909)291-8150 F (909)291-8166

REGISTERED PROFESSIONAL ENGINEER
CHRIS H. BRENA
No. C 41824
Exp. 3-31-10
CIVIL
STATE OF CALIFORNIA

MARK	REVISIONS	APPR	DATE
1	AS BUILT	F.R.	9/14/10

DESIGNED BY S.A. DRAWN BY A.T. CHECKED BY C.B

COLUMBIA AVENUE OVERPASS AT BNSF RAILROAD

INTERSECTION DETAIL COLUMBIA AVENUE @ CHICAGO AVENUE AND PAIGE DRIVE

SCALE: 1" = 10'

ACCT. NO. -

R-4036
C-20
SHEET 25 OF 103

PLE: INFO-P:\60904223 Columbia Grade Sep\CADD\Civil\Sheet\C-20.dwg PLOTTED: Sep 29, 2008 1:01pm BY: cmperos PLOT SCALE: 1=40
XREFS:bdr; xref-colu; xtopo; xrow_final; xstriping; xutil_pro; xutil_pr; xsignal MODIFIED: Sep 19, 2008 2:55pm

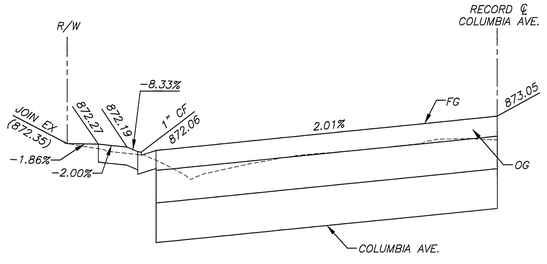

DWY @ "C" STA 4+44.78

COLUMBIA AVENUE
SCALE 1" = 10' HORZ.
SCALE 1" = 2' VERT.

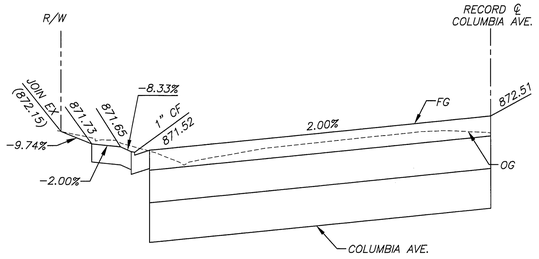

DWY @ "C" STA 5+22.55

COLUMBIA AVENUE
SCALE 1" = 10' HORZ.
SCALE 1" = 2' VERT.

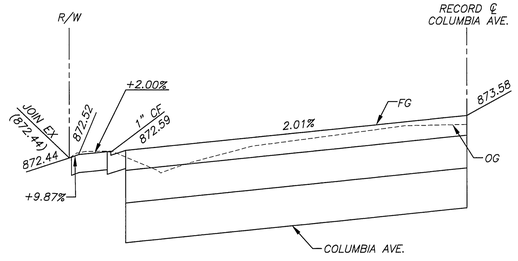

DWY @ "C" STA 6+64.18

COLUMBIA AVENUE
SCALE 1" = 10' HORZ.
SCALE 1" = 2' VERT.

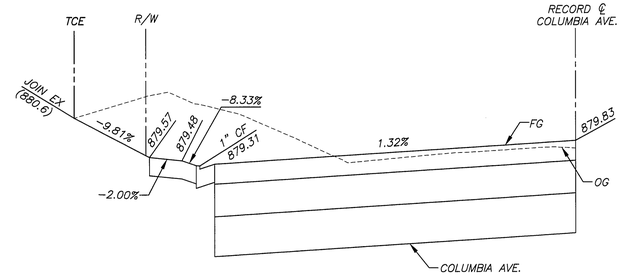

DWY @ "C" STA 8+55.73

COLUMBIA AVENUE
SCALE 1" = 10' HORZ.
SCALE 1" = 2' VERT.

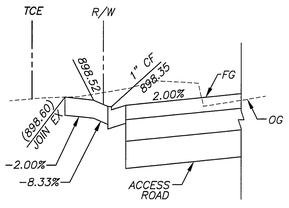

DWY @ "C" STA 21+88.33

WESTBOUND ACCESS ROAD
SCALE 1" = 10' HORZ.
SCALE 1" = 2' VERT.

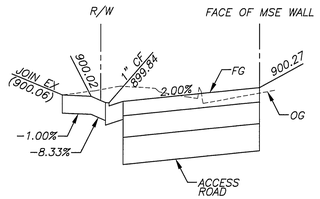

DWY @ "C" STA 23+09.66

WESTBOUND ACCESS ROAD
SCALE 1" = 10' HORZ.
SCALE 1" = 2' VERT.

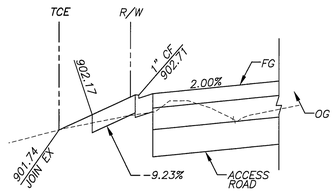

DWY @ "C" STA 25+14.72

WESTBOUND ACCESS ROAD
SCALE 1" = 10' HORZ.
SCALE 1" = 2' VERT.

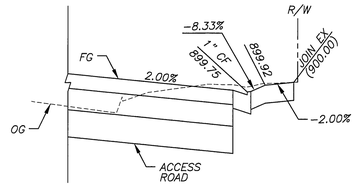

DWY @ "C" STA 22+17.79

EASTBOUND ACCESS ROAD
SCALE 1" = 10' HORZ.
SCALE 1" = 2' VERT.

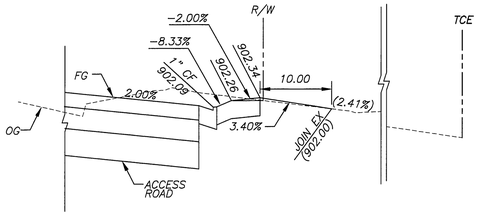

DWY @ "C" STA 24+35.22

EASTBOUND ACCESS ROAD
SCALE 1" = 10' HORZ.
SCALE 1" = 2' VERT.

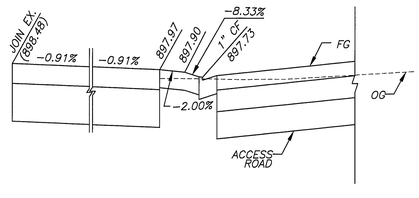

DWY @ "AW" STA 10+39.58

WESTBOUND ACCESS ROAD
SCALE 1" = 10' HORZ.
SCALE 1" = 2' VERT.

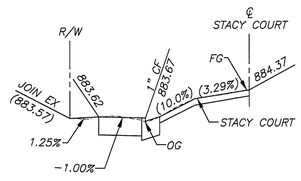

DWY @ "S" STA 11+12.51

STACY COURT
SCALE 1" = 10' HORZ.
SCALE 1" = 2' VERT.

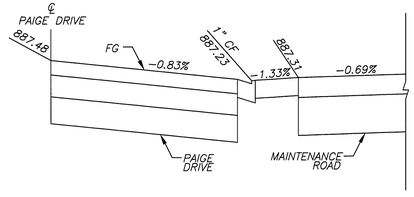

DWY @ "P" STA 17+02.40

PAIGE DRIVE
SCALE 1" = 10' HORZ.
SCALE 1" = 2' VERT.

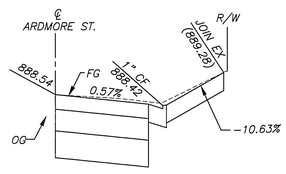

DWY @ "A" STA 10+71.27

ARDMORE STREET
SCALE 1" = 10' HORZ.
SCALE 1" = 2' VERT.

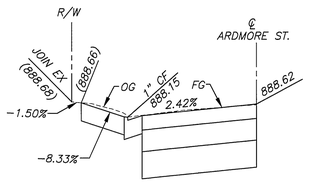

DWY @ "A" STA 10+90.22

ARDMORE STREET
SCALE 1" = 10' HORZ.
SCALE 1" = 2' VERT.

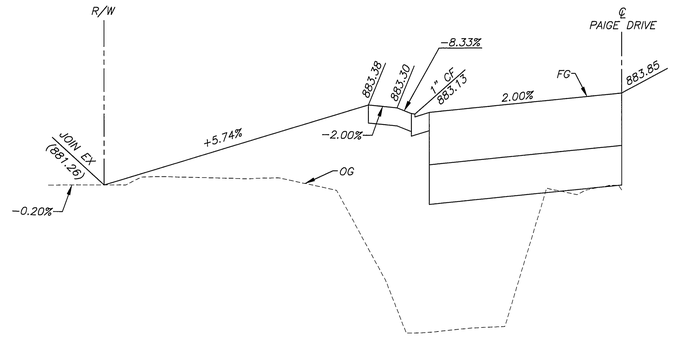

DWY @ "P" STA 11+76.48

ARDMORE STREET
SCALE 1" = 10' HORZ.
SCALE 1" = 2' VERT.

AS BUILT
DATE 9-14-10

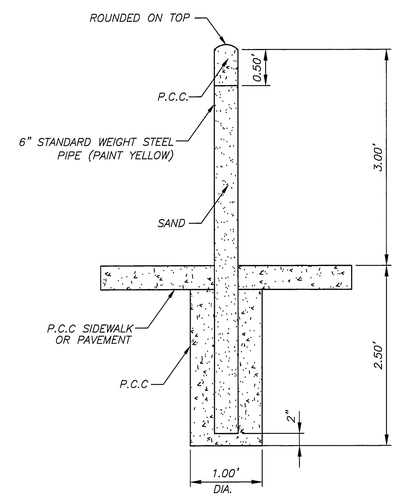

GUARD POST DETAIL

NTS

DMJM HARRIS | AECOM
800 NORTH HAVEN, SUITE 410
ONTARIO, CA 91764
T (909)291-8150 F (909)291-8166

REGISTERED PROFESSIONAL ENGINEER
CHRIS H. BRETALL
No. C41824
Exp. 3-31-10
CIVIL
STATE OF CALIFORNIA

MARK	REVISIONS	APPR.	DATE

DESIGNED BY 103 DRAWN BY S.A. CHECKED BY C.B.

COLUMBIA AVENUE OVERPASS AT BNSF RAILROAD

DETAILS

ACCT. NO. -

R-4036
C-21

SHEET 26 OF 113

FILE: INFO:P:\60004223 Columbia Grade Sep\CA00\Civil\Sheet\C-21.dwg PLOTTED: Sep 29, 2008 1:01pm BY: amparos PLOT SCALE: 1=1
XREFS.xbdr MODIFIED: Jul 21, 2008 3:50pm

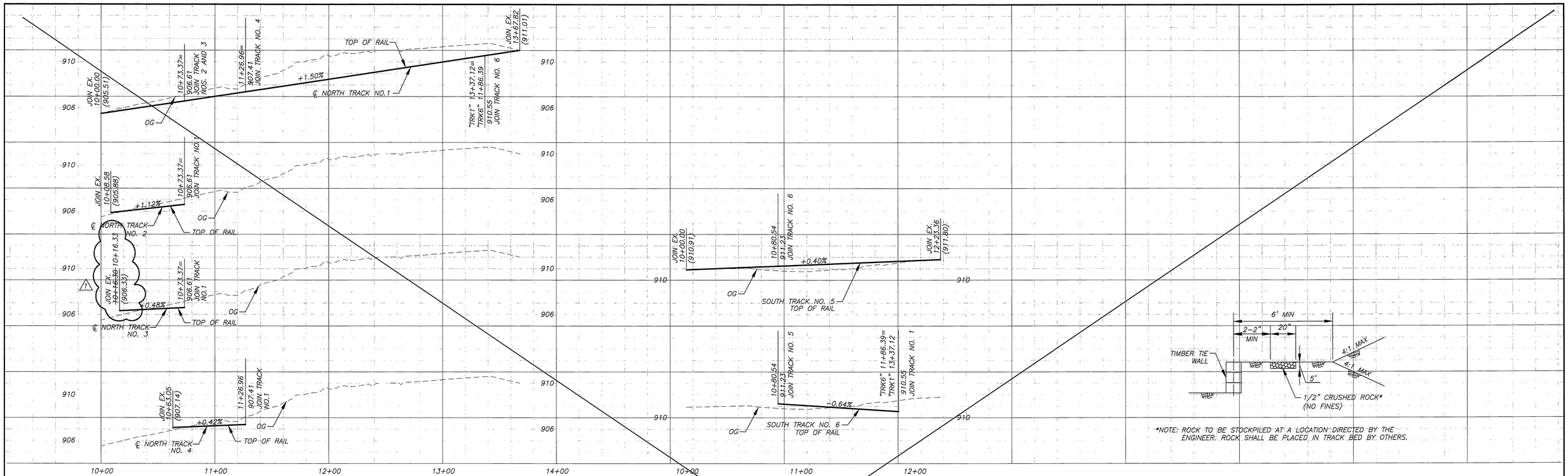

PROFILE – NORTH TRACKS

HORIZ. SCALE: 1"=40'
VERT SCALE: 1"=4'

PROFILE – SOUTH TRACKS

HORIZ. SCALE: 1"=40'
VERT SCALE: 1"=4'

*NOTE: ROCK TO BE STOCKPILED AT A LOCATION DIRECTED BY THE ENGINEER. ROCK SHALL BE PLACED IN TRACK BED BY OTHERS.

TYPICAL SECTION AT TIMBER TIE WALL

NTS

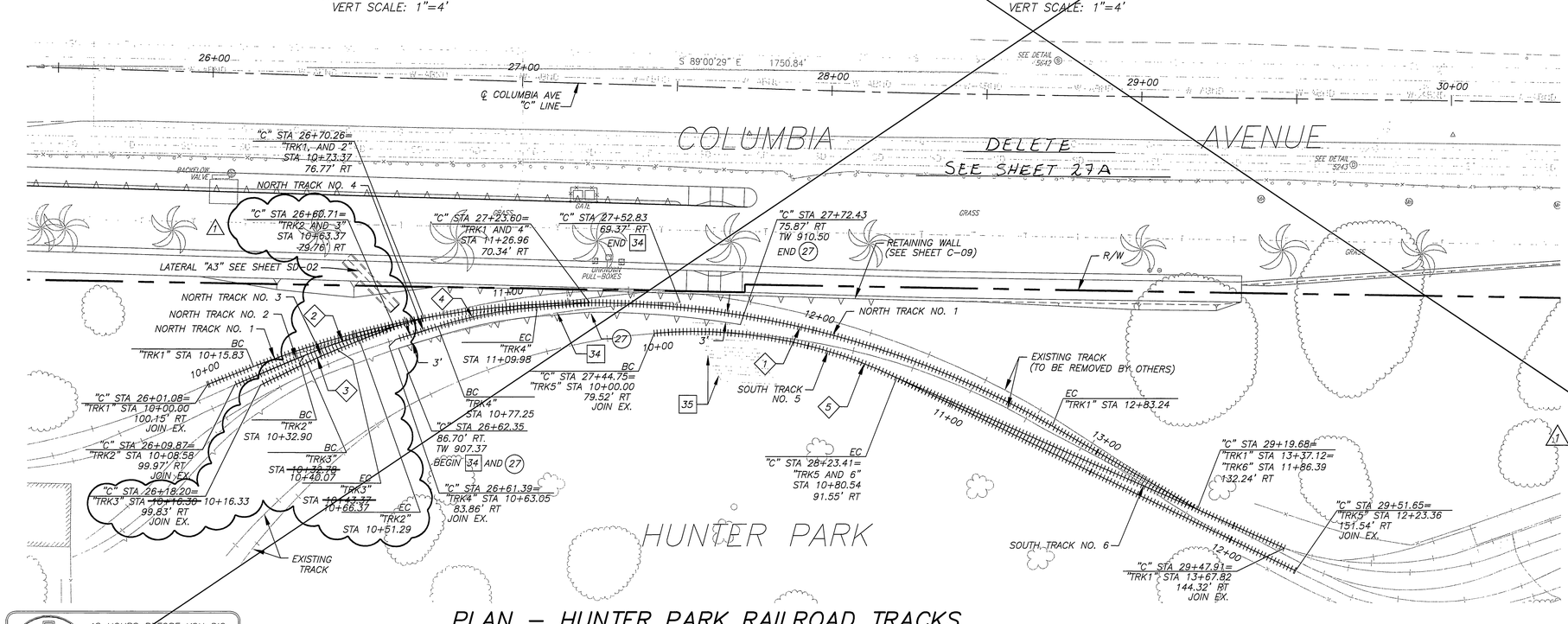

PLAN – HUNTER PARK RAILROAD TRACKS

SCALE: 1"=20'

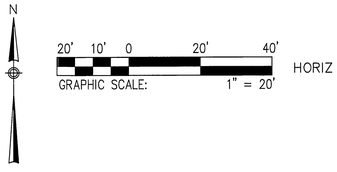

REMOVAL NOTES:

34 REMOVE EXISTING RETAINING WALL

35 REMOVE EXISTING CONCRETE PANELS

CONSTRUCTION NOTES:

27 CONSTRUCT TIMBER TIE RETAINING WALL (MATCH EXISTING)

CURVE DATA

CURVE	R	Δ	L	T	BEARING IN	BEARING OUT
1	300.00'	51°04'14"	267.40'	143.32'	N 68°41'19" E	S 60°14'27" E
2	~~150.00'~~	~~07°01'23"~~	~~18.39'~~	9.20'	N 67°14'23" E	N 74°15'47" E
3	150.00'	4°02'48" ~~10°02'48"~~	10.59' ~~26.30'~~	5.30' ~~13.18'~~	S 68°15'47" W	S 64°12'59" W ~~S 74°15'47" W~~
4	150.00'	12°30'06"	32.73'	16.43'	S 64°12'59" W	S 72°51'59" W
5	150.00'	30°45'51"	80.54'	41.27'	–	N 64°16'25" W

NOTES:

1. STATIONING IS BASED ON COLUMBIA AVENUE (CONSTRUCTION CENTERLINE) "C" LINE.
2. REMOVE ALL CONFLICTING EXISTING RAILROAD TRACKS (BY OTHERS).
3. NEW TRACK & TIES TO BE PROVIDED AND INSTALLED BY OTHERS.

48 HOURS BEFORE YOU DIG CALL UNDERGROUND SERVICE ALERT 1–800–227–2600

DMJM HARRIS | AECOM
800 NORTH HAVEN, SUITE 410
ONTARIO, CA 91764
T (909)291–8150 F (909)291–8166

REGISTERED PROFESSIONAL ENGINEER CHRIS H. BRECKLE No. C 41824 Exp. 3–31–10 CIVIL STATE OF CALIFORNIA

MARK	REVISIONS	APPR	DATE
1	PROVIDED 10–FOOT TANGENT BETWEEN TURNOUTS	C.B.	8–18–08

DESIGNED BY S.A. DRAWN BY C.S. CHECKED BY C.B.

COLUMBIA AVENUE OVERPASS AT BNSF RAILROAD

PLAN AND PROFILE
HUNTER PARK RAILROAD TRACKS

ACCT. NO. –

R–4036
C–22

SHEET 27 OF 103

FILE INFO P:\60004123 Columbia Cnde Sep\CADD\Civil\Sheet\C-22.dwg PLOTTED: Sep 29, 2008 1:01pm BY:amoreno PLOT SCALE: 1=1
XREFS:xhdr, xuil_ax, xnw_dtail, xrd-colu, xpro-track, xsurvey_chicpark, xtopo, xuil_pro MODIFIED: Sep 29, 2008 1:01pm

CONSTRUCTION NOTES:

(29) GRADE AREA FOR 110' X 8' TRAIN STATION AS SHOWN ON PLAN AND CONSTRUCT 4" CONCRETE PAD AND STATION CANOPY AS SHOWN ON TYPICAL SECTION PER SHEET C-24.

(30) GRADE AREA FOR 20' X 15' STEEL STORAGE CONTAINER AS SHOWN ON PLAN AND CONSTRUCT 4" CONCRETE PAD.

(31) INSTALL GATE VALVE IN VAULT PER ENGINEER'S DIRECTION.

(32) CONTRACTOR TO PROVIDE ELECTRICAL SERVICE AS SHOWN HEREON.

REMOVAL NOTES:

[12] RELOCATE PALM TREE TO NEW LOCATION APPROVED BY ENGINEER

NOTES:

1. STATIONING IS BASED ON MARLBOROUGH AVENUE (CONSTRUCTION CENTERLINE) "M" LINE.
2. TRACKS SHOWN ARE FOR FUTURE CONSTRUCTION BY OTHERS.
3. EXCEPT FOR PADS, TRACKS, AND WALKWAY, ALL GRADING AREAS TO BE REPLANTED WITH TURF TO MATCH EXISTING.
4. CONCRETE PADS FOR STATION AND STORAGE CONTAINER TO BE REINFORCED WITH WELDED WIRE FABRIC.

CURVE DATA				
CURVE	R	Δ	L	T
1	100.00'	15°26'26"	26.95'	13.56'
2	100.00'	17°43'49"	30.95'	15.60'
3	100.00'	17°59'29"	31.40'	15.83'
4	100.00'	13°59'24"	24.42'	12.27'
5	100.00'	7°45'45"	13.55'	6.78'
6	100.00'	9°22'50"	16.37'	8.20'
7	100.00'	5°59'56"	10.47'	5.24'
8	100.00'	5°59'56"	10.47'	5.24'

HUNTER PARK

EXISTING CONCRETE PAD

EXISTING RESTROOMS

NEW CONCRETE WALKWAY

EXIST. CIRCUIT BREAKER BOX ATTACHED TO FACE OF BUILDING

120 #12 UNDERGROUND CABLE IN 1"ø HOT DIPPED GALVANIZED STEEL PIPE. SERVICE TO MEET NATIONAL ELECTRIC CODE REQUIREMENTS. CONNECT TO EXIST CIRCUIT BREAKER.

4' 325

"M" STA 2+46.96 166.03' LT. FG ELEV 911.68'

STUB OUT

"M" STA 2+66.96 166.03' LT. FG ELEV 911.68'

"M" STA 2+41.96 154.03' LT. FG ELEV 911.57'

"M" STA 2+46.96 151.03' LT. FG ELEV 911.68'

"M" STA 2+66.96 151.03' LT. FG ELEV 911.68'

"M" STA 2+41.96 146.03' LT. FG ELEV 911.66'

LIMITS OF GRADING

SLOPE 5:1 (MAX)

"M" STA 1+31.96 154.03' LT. FG ELEV 911.21'

"M" STA 1+31.96 146.03' LT. FG ELEV 911.29'

HUNTER PARK STATION*

TRACK NO.2

TRACK NO.1

N 89°2'6" W

SLOPE 5:1 (MAX)

SIDING TRACK

EXISTING TRACKS

FUTURE TRACKS BY OTHERS

"TRK1" STA 10+73.41

"TRK1" STA 11+83.71

"TRK2" STA 12+15.14

"TRK1" STA 12+15.11

"TRK1" STA 12+26.10= "M" STA 2+83.16 136.73' LT

"TRK1" STA 12+50.52= "M" STA 3+07.05 132.09' LT

"M" STA 3+17.98

"TRK1" STA 12+61.47 131.33' LT JOIN EX.

"TRK1" STA 10+42.46= "M" STA 1+01.05 140.28' LT

"M" STA 0+92.82 "TRK1" STA 10+33.82 137.64' LT "TRK1 AND 2"

"TRK1" STA 10+31.58

"TRK1" STA 10+04.63= "M" STA 0+64.22 132.29' LT

"M" STA 0+59.60 "TRK1" STA 10+00.00 132.11' LT JOIN EX.

"TRK2" STA 10+44.54= "M" STA 1+03.56 139.11' LT

"TRK2" STA 10+58.33

"TRK2" STA 10+69.12= "SIDING TRK" STA 10+69.12= "M" STA 1+27.85 140.03' LT "TRK2 & SIDING TRACK"

"SIDING TRACK" STA 11+11.71= "M" STA 1+70.21 135.57' LT

"SIDING TRACK" STA 11+22.18

"SIDING TRACK" STA 11+37.18

"SIDING TRACK" STA 11+47.65

"TRK2" STA 11+89.75= "SIDING TRK" STA 11+90.25= "M" STA 2+48.48 140.03' LT "TRK2 & SIDING TRACK"

"TRK2" STA 11+98.49

"M" STA 2+82.21 "TRK1" STA 12+25.12 137.04' LT "TRK1 AND 2"

INSTALL 1" PVC SCHEDULE 80 WATER SERVICE LINE

TAP INTO THE "DOWNSTREAM" SIDE OF THE EXISTING BACKFLOW DEVICE

EX. POLE

EX. WATER SERVICE LINE

EX. POLE

℄ MARLBOROUGH AVE "M" LINE

MARLBOROUGH AVENUE

1+00

N 89°2'6" W

2+00

℄ IOWA AVENUE

10+00

STA 10+00.00 ℄ IOWA = STA 10+00.00 ℄ MARLBOROUGH

48 HOURS BEFORE YOU DIG CALL UNDERGROUND SERVICE ALERT 1-800-227-2600

NOT FOR CONSTRUCTION

AS BUILT
DATE 9-14-10

N

10' 5' 0 10' 20'
HORIZ
GRAPHIC SCALE: 1" = 10'

GRADING PLAN

SCALE: 1"=10'

DMJM HARRIS | AECOM
800 NORTH HAVEN, SUITE 410
ONTARIO, CA 91764
T (909)291-8150 F (909)291-8166

REGISTERED PROFESSIONAL ENGINEER CHRIS H. BRENTLINGER No. C 41824 Exp. 3-31-10 CIVIL STATE OF CALIFORNIA

MARK	REVISIONS	APPR	DATE
2	AS BUILT	F.R.	9/9/10
1	ADDED SIDING TRACK, DELETED NOTE, CORRECTED STA. & ADDED "M" STATIONS AND OFFSETS	C.B.	8-18-08

DESIGNED BY S.A. DRAWN BY C.S. CHECKED BY C.B.

COLUMBIA AVENUE OVERPASS AT BNSF RAILROAD

GRADING PLAN
HUNTER PARK RAILROAD STATION

ACCT. NO. -

R-4036
C-23

SHEET 28 OF 103

FILE: INFO:P:\60004223 Columbia Grade Sep\CADD\Civil\Sheet\C-23.dwg PLOTTED: Sep 29, 2008 1:02pm BY: emparos PLOT SCALE: 1=1
XREFS: xbdr; xu1jl_ex; xrow_fmdi; xtopo_station; xrd_iowa; xstation MODIFIED: Sep 29, 2008 1:02pm

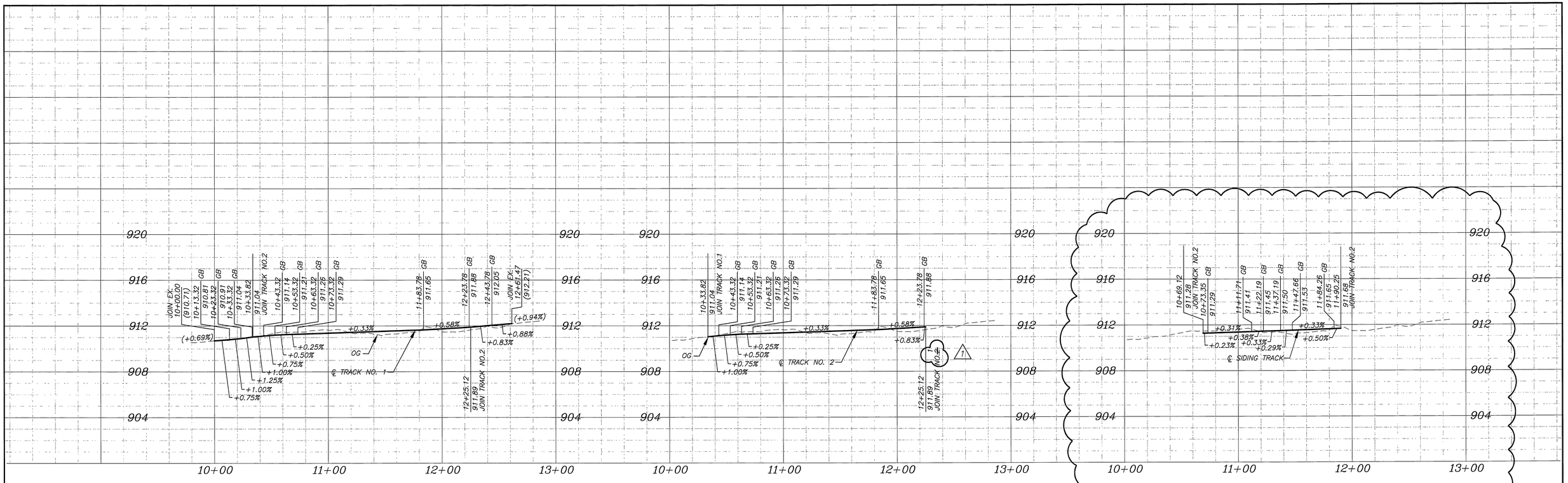

PROFILE – TRACK NO.1

HORIZ. SCALE: 1"=40'
VERT SCALE: 1"=4'

PROFILE – TRACK NO.2

HORIZ. SCALE: 1"=40'
VERT SCALE: 1"=4'

PROFILE – SIDING TRACK

HORIZ. SCALE: 1"=40'
VERT SCALE: 1"=4'

NOTES:

1. ½" CRUSHED ROCK TO BE STOCKPILED AT A LOCATION DIRECTED BY THE ENGINEER. ROCK SHALL BE PLACED IN TRACK BED BY OTHERS.

* TRACKS SHOWN ARE FOR FUTURE CONSTRUCTION BY OTHERS.

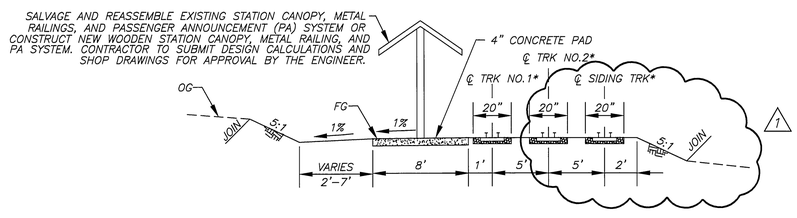

TYPICAL SECTION HUNTER PARK STATION

NTS

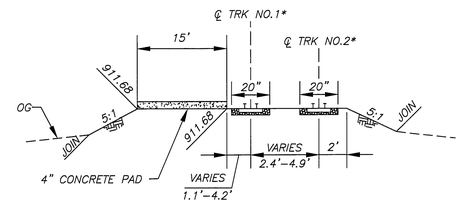

TYPICAL SECTION STORAGE CONTAINER

NTS

AS BUILT
DATE 9-14-10

~~NOT FOR CONSTRUCTION~~ 1

DMJM HARRIS | AECOM
800 NORTH HAVEN, SUITE 410
ONTARIO, CA 91764
T (909)291–8150 F (909)291–8166

REGISTERED PROFESSIONAL ENGINEER CHRIS H. BRECHT No. C 41824 Exp. 3-31-10 CIVIL STATE OF CALIFORNIA

MARK	REVISIONS	APPR	DATE
1	ADDED SIDING TRACK, DELETED NOTE & REV. CALL-OUT	C.B.	8-18-08

DESIGNED BY C.S. DRAWN BY C.S. CHECKED BY C.B.

COLUMBIA AVENUE OVERPASS AT BNSF RAILROAD

PROFILE – HUNTER PARK TRACKS

SCALE: HOR. 1" = 40'; VER. 1" = 4'

ACCT. NO. –

R–4036
C–24

SHEET 29 OF 103

FILE INFO:P:\60004223 Columbia Grade Sep\CADD\Civil\Sheet\C-24.dwg PLOTTED: Sep 29, 2008 1:02pm BY:omporos PLOT SCALE: 1=40
XREFS:xbdr; xpro-station track MODIFIED: Sep 19, 2008 2:55pm