RIVERSIDE CALIFORNIA

PUBLIC WORKS DEPARTMENT

RIVERSIDE AVENUE UNDERPASS

UNION PACIFIC RAILROAD LOS ANGELES SUBDIVISION - MP 55.54

BENCHMARK:

CITY OF RIVERSIDE BM H6-B2 BRASS DISK STAMPED "DEPT. OF PUBLIC WORKS H6-B" IN WELL DN 1.03' AT THE INTERSECTION OF JURUPA AVENUE & MAGNOLIA AVENUE ELEVATION: 834.784' (1971 ADJUSTMENT)

BASIS OF BEARING:

THE BEARING OF NORTH 35^39'49" WEST AS MEASURED BETWEEN CITY OF RIVERSIDE CONTROL POINTS 2069 AND 0181, AS PUBLISHED BY THE CITY OF RIVERSIDE WAS TAKEN AS THE BASIS OF BEARINGS FOR THIS SURVEY

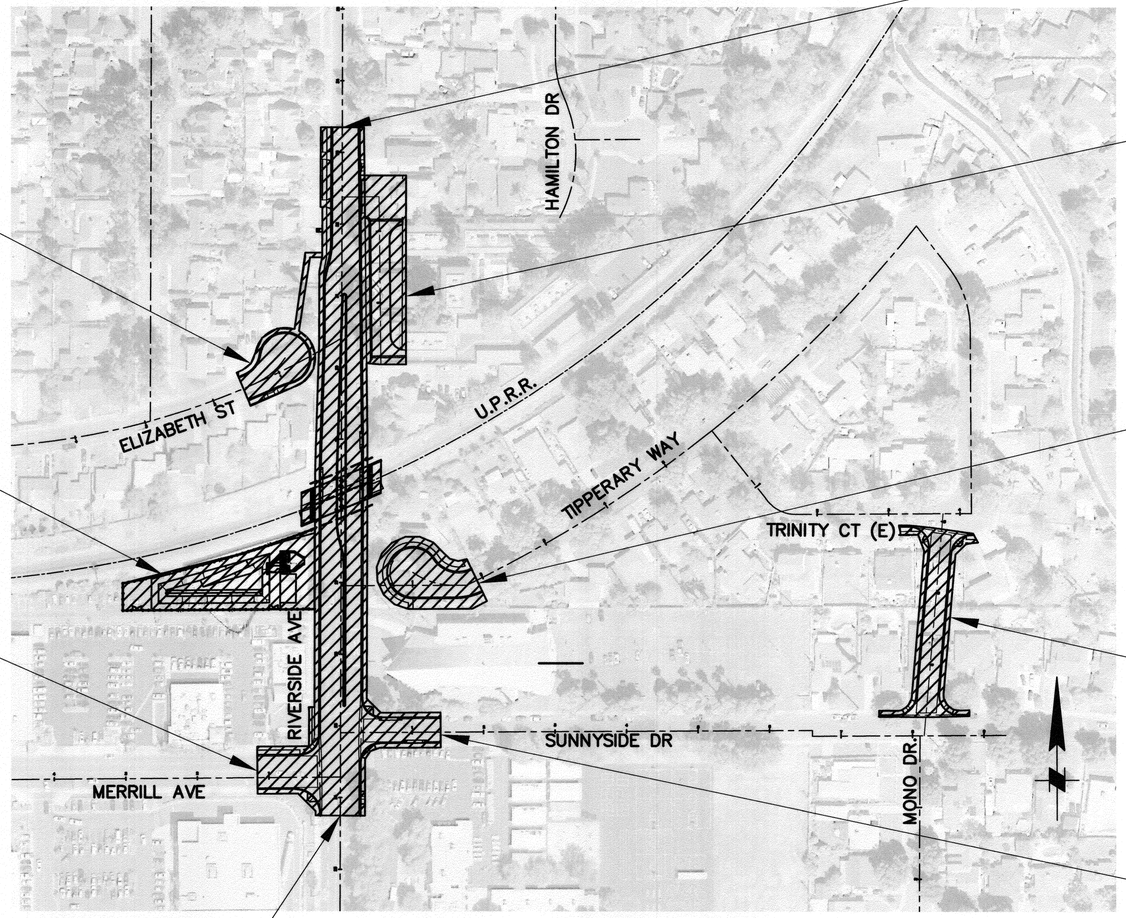

BEGIN CONSTRUCTION
STA 23+75.00

PROJECT LOCATION PLAN
N.T.S.

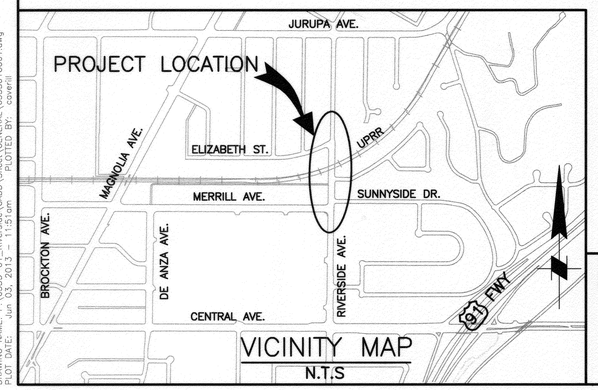

VICINITY MAP
N.T.S

AS BUILT
BID # 7185
COMPLETED 3/25/16

DIGALERT
DIAL TOLL FREE
1-800-422-4133
AT LEAST TWO DAYS BEFORE YOU DIG
UNDERGROUND SERVICE ALERT OF SOUTHERN CALIFORNIA

MOFFATT & NICHOL
3780 KILROY AIRPORT WAY, SUITE 600
LONG BEACH, CALIFORNIA, 90806
562-426-9551

REGISTERED PROFESSIONAL ENGINEER
M.S. NICHOL
NO. C60129
EXP. 06/30/14
CIVIL
STATE OF CALIFORNIA

DATE _____

MARK	REVISIONS	APPR.	DATE

DESIGNED BY RW DRAWN BY TP CHECKED BY MSN

APPROVED BY	BY	DATE
PRINCIPAL ENGINEER	FM	8/23/13
CONSTRUCTION ADMIN.	DC	8/28/14
SURVEYOR		
STREET SERVICES		
TRAFFIC ENGINEER	S.H.	8-16-13
PARK & REC. DEP.		

CITY OF RIVERSIDE, CALIFORNIA
PUBLIC WORKS DEPARTMENT
APPROVED BY
CITY ENGINEER
DATE 8/28/2013

RIVERSIDE AVE UNDERPASS

PROJECT TITLE SHEET G-1

HORIZ. SCALE: N/A VERT. SCALE: N/A

ACCT. NO. -
W.O. NO. -
R-4240
SHEET 1 OF 146
FILE NO.

DRAWING NAME: P:\6355-01 (Riverside)\CADD\Sheet\GENERAL\63550(G001.dwg
PLOT DATE: Wed Aug 28, 2013 - 1:51pm PLOTTED BY: cowan

DRAWING NO.	SHEET NO.	TITLE SHEETS
G-1	1	PROJECT TITLE SHEET
G-2	2	INDEX OF SHEET DRAWINGS
G-3	3	GENERAL NOTES
G-4	#	CONSTRUCTION NOTES
G-5	5	LEGENDS AND ABBREVIATIONS

DRAWING NO.	SHEET NO.	TYPICAL SECTIONS
SP-1	6	SURVEY CONTROL PLAN

DRAWING NO.	SHEET NO.	TYPICAL SECTIONS
TS-1	7	TYPICAL CROSS SECTIONS
TS-2	8	TYPICAL CROSS SECTIONS
TS-3	9	TYPICAL CROSS SECTIONS
TS-4	10	TYPICAL CROSS SECTIONS

DRAWING NO.	SHEET NO.	STAGE CONSTRUCTION
SC-1	11	STAGE CONSTRUCTION PHASE 1
SC-2	12	STAGE CONSTRUCTION PHASE 2
SC-3	13	STAGE CONSTRUCTION PHASE 3
DE-1	14	DETOUR PLAN

DRAWING NO.	SHEET NO.	SHOOFLY RAILROAD
T-1	15	GENERAL NOTES AND DRAWING SCHEDULE
T-2	16	TRACK GEOMETRY DATA
T-3	17	SHOOFLY TRACK PLAN LAYOUT
T-4	18	MAIN TRACK #1 AND FUTURE PLAN LAYOUT
T-5	19	SHOOFLY TRACK TYPICAL CROSS SECTIONS
T-6	20	MAIN TRACK #1 TYPICAL CROSS SECTIONS
T-7	21	SHOOFLY TRACK – PLAN & PROFILE
T-8	22	SHOOFLY TRACK – PLAN & PROFILE
T-9	23	SHOOFLY TRACK – PLAN & PROFILE
T-10	24	MAIN TRACK #1 – PLAN & PROFILE
T-11	25	MAIN TRACK #1 – PLAN & PROFILE
T-12	26	MAIN TRACK #1 – PLAN & PROFILE

DRAWING NO.	SHEET NO.	ROADWAY DEMOLITION PLAN
DP-1	27	DEMOLITION PLAN
DP-2	28	DEMOLITION PLAN
DP-3	29	DEMOLITION PLAN

DRAWING NO.	SHEET NO.	ROADWAY LAYOUT
L-1	30	ROADWAY LAYOUT
L-2	31	ROADWAY LAYOUT
L-3	32	ROADWAY LAYOUT

DRAWING NO.	SHEET NO.	ROADWAY PROFILE
P-1	33	PROFILES – RIVERSIDE AVENUE
P-2	34	PROFILES – RIVERSIDE AVENUE
P-3	35	PROFILES – MERRILL AVE & SUNNYSIDE DR
P-4	36	PROFILES – ELIZABETH ST & TIPPERARY WAY
P-5	37	PROFILES – MONO DRIVE

DRAWING NO.	SHEET NO.	CONSTRUCTION DETAILS
CD-1	38	CONSTRUCTION DETAIL
CD-2	39	CONSTRUCTION DETAIL
CD-3	40	CONSTRUCTION DETAIL
CD-4	41	CONSTRUCTION DETAIL

DRAWING NO.	SHEET NO.	ROADWAY SIGNING AND STRIPING
SP-1	42	SIGNING & STRIPING PLAN
SP-2	43	SIGNING & STRIPING PLAN
SP-3	44	SIGNING & STRIPING PLAN

DRAWING NO.	SHEET NO.	STORM DRAIN
D-1	45	DRAINAGE KEY SHEET
D-2	46	GENERAL NOTES
D-3	47	LEGEND, ABBREVIATIONS, AND CONSTRUCTION NOTES
D-4	48	DRAINAGE PLAN
D-5	49	DRAINAGE PLAN
D-6	50	DRAINAGE PROFILES, LINE "A"
D-7	51	DRAINAGE PROFILE, LINES "B", "C", "C1"
D-8	52	DRAINAGE PROFILE LINES "C2", "C3", "C4", "C5"
D-9	53	DRAINAGE PROFILE LINES "C2", "C3", "C4", "C5"

DRAWING NO.	SHEET NO.	LIFT STATION
PS-1	54	PUMP STATION & DETENTION BASIN SITE PLAN
PS-2	55	DETENTION BASIN GRADING PLAN
PS-3	57	DETENTION BASIN SECTIONS
PS-4	58	DETENTION BASIN DETAILS
PS-5	59	PUMP STATION PLAN & DETAIL
PS-6	60	PUMP STATION PIPING PLAN
PS-7	61	ELECTRICAL LAYOUT
PS-8	62	PUMP STATION STRUCTURE
PS-9	63	PUMP STATION STRUCTURE
PS-10	64	PUMP STATION STRUCTURE
PS-11	65	PUMP STATION STRUCTURE
PS-12	66	GENERAL NOTES, SYMBOLS, AND ABBREVIATIONS
PS-13	67	ELECTRICAL SITE PLAN
PS-14	68	SINGLE LINE DIAGRAM
PS-15	69	ELECTRICAL ENLARGED PLAN
PS-16	70	ELEVATION & PLAN
PS-17	71	GENERATOR PLAN & DETAILS
PS-18	72	ELECTRICAL DETAILS
PS-19	73	ELECTRICAL DETAILS

DRAWING NO.	SHEET NO.	SANITARY SEWER
SS-1	74	SANITARY SEWER 1 – PLAN & PROFILE
SS-2	75	SANITARY SEWER 2 – PLAN & PROFILE

DRAWING NO.	SHEET NO.	UTILITY
U-1	76	UTILITY DISPOSITION
U-2	77	UTILITY DISPOSITION
U-3	78	UTILITY DISPOSITION

DRAWING NO.	SHEET NO.	IRRIGATION & PLANTING PLANS
LP-1	79	IRRIGATION PLAN
LP-2	80	IRRIGATION PLAN
LP-3	81	IRRIGATION PLAN
LP-4	82	PLANTING PLAN
LP-5	83	PLANTING PLAN
LP-6	84	PLANTING PLAN
LP-7	85	PLANTING PLAN
LP-8	86	PLANTING PLAN

DRAWING NO.	SHEET NO.	STRUCTURAL
S-1	87	GENERAL ARRANGEMENT
S-2	##	GENERAL NOTES AND BILL OF MATERIALS
S-3	89	PROPOSED CONSTRUCTION STAGING – 1 OF 2
S-4	90	PROPOSED CONSTRUCTION STAGING – 2 OF 2
S-5	91	TYPICAL SECTION – ABUT #1 AND ABUT #3
S-6	92	TYPICAL SECTION – AT BENT #2
S-7	93	ARCHITECTURE TREATMENT
S-8	94	FOUNDATION PLAN
S-9	##	CIDH PILE DETIALS AND REINFORCING SCHEDULES
S-10	96	ABUTMENT NO. 1 FRAMING DETAILS
S-11	97	ABUTMENT NO. 1 REINFORCING DETAILS
S-12	98	ABUTMENT NO. 1 FASCIA WALL FRAMING AND REINFORCING DETAILS
S-13	99	ABUTMENT NO. 3 FRAMING DETAILS
S-14	100	ABUTMENT NO. 3 REINFORCING DETAILS
S-15	101	ABUTMENT NO. 3 FASCIA WALL FRAMING AND REINFORCING DETAILS
S-16	102	APPROACH SLAB FRAMING AND REINFORCING DETAILS
S-17	103	BENT NO. 2 FRAMING DETAILS
S-18	###	BENT NO. 2 REINFORCING DETAILS – 1 OF 2
S-19	105	BENT NO. 2 REINFORCING DETAILS – 2 OF 2
S-20	106	CURB FRAMING AND REINFORCING DETAILS
S-21	107	REINFORCING SCHEDULE – 1 OF 2
S-22	###	REINFORCING SCHEDULE – 2 OF 2
S-23	109	BEAM SPAN FRAMING PLAN
S-24	110	BEAM DETAILS – 1 OF 2
S-25	111	BEAM DETAILS – 2 OF 2
S-26	###	BEAM SPAN ASSEMBLY DETAILS
S-27	113	BEAM SPAN BEARING ASSEMBLY DETAILS – 1 OF 2
S-28	###	BEAM SPAN BEARING ASSEMBLY DETAILS – 2 OF 2
S-29	###	BEAM SPAN PIECE MARK DETAILS
S-30	###	DECK PLATE LAYOUT
S-31	117	DECK PLATE DETAILS
S-32	118	WATERPROOFING AND DRAINAGE DETAILS – 1 OF 2
S-33	119	WATERPROOFING AND DRAINAGE DETAILS – 2 OF 2
S-34	###	PRESTRESSED CONCRETE FASCIA GIRDER DETAILS – 1 OF 6
S-35	###	PRESTRESSED CONCRETE FASCIA GIRDER DETAILS – 2 OF 6
S-36	###	PRESTRESSED CONCRETE FASCIA GIRDER DETAILS – 3 OF 6
S-37	###	PRESTRESSED CONCRETE FASCIA GIRDER DETAILS – 4 OF 6
S-38	###	PRESTRESSED CONCRETE FASCIA GIRDER DETAILS – 5 OF 6
S-39	125	PRESTRESSED CONCRETE FASCIA GIRDER DETAILS – 6 OF 6
S-40	126	BRIDGE STEEL HANDRAIL DETAILS
S-41	127	MISCELLANEOUS DETAILS
S-42	128	RETAINING WALL LOCATION GENERAL LAYOUT
S-43	129	RETAINING WALL GENERAL NOTES AND INDEX TO PLANS
S-44	130	RETAINING WALL 1 AND 2 PLAN AND ELEVATION
S-45	131	RETAINING WALL 3 PLAN AND ELEVATION
S-46	132	RETAINING WALL 4 PLAN AND ELEVATION
S-47	133	RETAINING WALL 5 AND 6 PLAN AND ELEVATION
S-48	134	RETAINING WALL 7 PLAN AND ELEVATION
S-49	###	RETAINING WALL 8 PLAN AND ELEVATION
S-50	###	NOT USED
S-51	###	SOLDIER PILE WALL DETAILS
S-52	138	24" DIA. CIDH PILE RETAINING WALL DETAILS
S-53	139	48" DIA. CIDH PILE RETAINING WALL DETAILS
S-54	###	RW STEEL RAILING DETAILS
S-55	141	LOG OF TEST BORINGS – 1 OF 6
S-56	142	LOG OF TEST BORINGS – 2 OF 6
S-57	143	LOG OF TEST BORINGS – 3 OF 6
S-58	144	LOG OF TEST BORINGS – 4 OF 6
S-59	145	LOG OF TEST BORINGS – 5 OF 6
S-60	146	LOG OF TEST BORINGS – 6 OF 6

* TRAFFIC SIGNAL MODIFICATION

* NOTATES PLANS BY OTHERS

ASBUILT

BID NO. 7185

COMPLETION DATE 03/25/2016

R.E. NAME DAVID HATCH

DRAWING NAME: \\ntcpdb02f\ts_projects\8318 ts13\CADD\Sheet\GENERAL\635501G002.dwg
PLOT DATE: Sep 27, 2016 - 9:17am PLOTTED BY: dhigh

DIGALERT
DIAL TOLL FREE
1-800-422-4133
AT LEAST TWO DAYS BEFORE YOU DIG
UNDERGROUND SERVICE ALERT OF SOUTHERN CALIFORNIA

MOFFATT & NICHOL
3780 KILROY AIRPORT WAY, SUITE 600
LONG BEACH, CALIFORNIA, 90806
562-426-9551

DATE

REGISTERED PROFESSIONAL ENGINEER
U.S. Nichol
M.S. NICHOL
NO. C60129
EXP. 06/30/14
CIVIL
STATE OF CALIFORNIA

MARK	REVISIONS	APPR.	DATE

DESIGNED BY RW DRAWN BY TP CHECKED BY MSN

UPRR BRIDGE 55.54 LOS ANGELES SUB

CITY OF RIVERSIDE, CALIFORNIA
PUBLIC WORKS DEPARTMENT

RIVERSIDE AVE UNDERPASS

INDEX OF SHEET DRAWINGS G-2

HORIZ. SCALE: AS SHOWN VERT. SCALE: AS SHOWN

ACCT. NO. -
W.O. NO. -

R-4240

SHEET 2 OF 146

FILE NO.

GENERAL NOTES:

1. NO PERSON SHALL PERFORM ANY CONSTRUCTION ACTIVITY OR INSTALL ANY OBJECTS WITHIN THE PUBLIC RIGHTS-OF-WAY OR EASEMENTS OF THE CITY OF RIVERSIDE WITHOUT A VALID CONSTRUCTION PERMIT OR, A STREET OPENING PERMIT OR AN ENCROACHMENT PERMIT ISSUED BY THE CITY'S PUBLIC WORKS DEPARTMENT.

2. IT SHALL BE THE RESPONSIBILITY OF THE CONTRACTOR TO CLEAR THE RIGHT OF WAY IN ACCORDANCE WITH THE PROVISIONS OF LAW AS IT AFFECTS EACH UTILITY INCLUDING IRRIGATION LINES AND APPURTENANCES AND AT NO COST TO THE CITY.

3. THE ENGINEER OF RECORD SIGNING THESE PLANS IS RESPONSIBLE FOR ASSURING THE ACCURACY AND ACCEPTABILITY OF THE WORK HEREON. IN THE EVENT OF DISCREPANCIES ARISING DURING CONSTRUCTION. THE ENGINEER OF RECORD SHALL BE RESPONSIBLE FOR DETERMINING AN ACCEPTABLE SOLUTION AND REVISING THE PLANS FOR APPROVAL BY THE CITY (THIS NOTE REQUIRED ON ALL PLANS)

4. THE CONTRACTOR SHALL PREPARE AND COMPACT THE SUBGRADE TO ELEVATIONS WITHIN +/- .1' OF THE DESIGN ELEVATIONS AND SHALL BE RESPONSIBLE FOR THE CONDITION OF THE SUBGRADE UNTIL ACCEPTED BY THE ENGINEER. THE CONTRACTOR SHALL ALSO BE RESPONSIBLE FOR ANY BARRICADING DURING THIS TIME.

5. THE CONTRACTOR SHALL BE RESPONSIBLE FOR PRESERVING OR RE-ESTABLISHING AND REFERENCING SURVEY MONUMENTS DESTROYED, DISTURBED OR BURIED AS A RESULT OF CONSTRUCTION SHOWN HEREON.

6. WHERE NEW PAVEMENT IS TO JOIN THE EXISTING PAVEMENT, THE EDGE OF THE EXISTING PAVEMENT SHALL BE SAWCUT IN A SMOOTH AND STRAIGHT LINE. CONSTRUCT MATCH-UP PAVING AS SHOWN ON THE PLANS AND OVERLAY PAVING AS DIRECTED IN THE FIELD TO PRODUCE A SMOOTH SECTION.

7. ANY TRAFFIC CONTROL STRIPING OBLITERATED AND/OR BADLY WORN DURING CONSTRUCTION SHALL BE RESTORED BY THE CONTRACTOR WITHIN FIVE DAYS AFTER NOTIFICATION FROM THE ENGINEER.

8. STREET IMPROVEMENT WORK THAT WILL CAUSE DAMAGE TO THE DETECTOR LOOP(S) SHALL NOT BE PERFORMED UNTIL THE ENGINEER HAS BEEN NOTIFIED AND THE NECESSARY TIMING ADJUSTMENTS ARE MADE TO MAINTAIN SIGNAL OPERATION.

9. FINAL STRIPING FOR TRAFFIC CONTROL AND/OR PAVEMENT MARKING TO BE THE RESPONSIBILITY OF THE CONTRACTOR.

10. EXISTING UTILITIES SHOWN ON THESE PLANS ARE PLOTTED FROM UTILITY RECORDS. THE CONTRACTOR IS REQUIRED TO TAKE DUE PRECAUTIONARY MEASURES TO LOCATE AND PROTECT ALL UTILITIES WHETHER OR NOT SHOWN ON THIS PLAN. THE CONTRACTOR SHALL CALL IN A LOCATION REQUEST TO UNDERGROUND SERVICE ALERT (USA), PHONE #1-800-227-2600 OR 1-800-422-4133. TWO WORKING DAYS BEFORE DIGGING. SECTION 4216/4217 OF THE GOVERNMENT CODE REQUIRES A DIG ALERT IDENTIFICATION NUMBER BE ISSUED BEFORE A PERMIT WILL BE ISSUED BY THE PUBLIC WORKS DEPARTMENT INVOLVING EXCAVATION FOR UNDERGROUND FACILITIES.

11. CONTRACTOR IS TO VERIFY EXISTING SEWER ELEVATION PRIOR TO CONSTRUCTION.

12. LOCATION OF LATERALS TO BE DETERMINED IN THE FIELD. AVOID CONFLICT WITH PROPOSED AND/OR EXISTING FACILITIES.

13. A PLUG SHALL BE INSTALLED AND WILL REMAIN IN PLACE WHERE THE NEW SEWER CONNECTS WITH THE EXISTING SEWER UNTIL THE NEW SEWER IS ACCEPTED BY THE ENGINEER.

14. CONTRACTOR SHALL ADJUST MANHOLES TO FINAL GRADE AFTER PAVING IS COMPLETED.

15. ALL ELEVATIONS AND OFFSET SHOWN ON THE PLANS SHALL BE STAKED IN THE FIELD AND VERIFIED PRIOR TO CONSTRUCTION. ALL ELEVATIONS, OFFSETS, AND DIMENSIONS SHOWN FOR RETAINING WALLS AND DRIVEWAYS ON OR ADJACENT TO PRIVATE PROPERTY SHALL BE VERIFIED PRIOR TO CONSTRUCTION.

16. PRIME CONTRACTORS BIDDING THIS WORK SHALL HAVE A CLASS "A" CONTRACTORS LICENSE.

17. PRIOR TO ISSUANCE OF GRADE SHEETS FOR ANY PROPOSED SEWER AND STORM DRAIN FACILITIES CONTRACTOR SHALL EXPOSE ALL UTILITIES WHICH CROSS OR MAY BE IN CONFLICT WITH THE PROPOSED SEWER AND STORM DRAIN FACILITIES AND COORDINATE WITH THE ENGINEER TO HAVE THE LOCATION AND ELEVATION VERIFIED BY SURVEYORS.

18. CONTRACTOR SHALL COMPLY WITH ALL LOCAL, STATE, AND FEDERAL SAFETY CODES AND REGULATIONS AND THE SPECIFICATIONS FOR THIS CONTRACT.

19. ALL CONSTRUCTION ACTIVITIES SHALL BE SCHEDULED AND COORDINATED BY THE CONTRACTOR AND WITH THE APPROVAL OF THE ENGINEER, INCLUDING THE VARIOUS COMPANIES, AGENCIES AND OTHER CONTRACTORS WHO MAY BE AFFECTED BY THIS WORK. ALL REQUIRED PERMITS INCLUDING RAILROAD RIGHT-OF-WAY PERMITS NEEDED FOR THE WORK SHALL BE OBTAINED BY THE CONTRACTOR UNLESS OTHERWISE NOTED. THE CONTRACTOR SHALL COMPLY WITH ALL RAILROAD OCCUPANCY REQUIREMENTS, INCLUDING INSURANCE REQUIREMENTS AND REQUIRED SAFETY TRAINING.

20. POSITIVE DRAINAGE MUST BE MAINTAINED AT ALL TIMES DURING CONSTRUCTION TO PREVENT PONDING OF WATER.

21. THE CONTRACTOR SHALL PROTECT ALL UPRR SIGNAL FACILITIES IN PLACE. THE CONTRACTOR SHALL FIELD VERIFY ALL DIMENSIONS FOR CONFLICTS WITH EXISTING UTILITIES. SIGNAL CABLES/EQUIPMENT AND/OR OTHER ITEMS THAT MIGHT IMPAIR CONSTRUCTION ACTIVITIES. INCONSISTENCIES FOUND SHALL BE REPORTED TO THE ENGINEER.

22. ALL EXCAVATED WASTE MATERIAL SHALL BE IMMEDIATELY REMOVED FROM THE SITE. ON SITE STORAGE OF EXCAVATED WASTE MATERIAL SHALL NOT BE PERMITTED AT ANY TIME. SUITABLE EXCAVATED MATERIAL SHALL BE STOCKPILED PER APPROVAL BY THE ENGINEER.

23. ON-SITE CONSTRUCTION BY OTHERS. INCLUDING ROUTINE MAINTENANCE WORK, (UPRR FORCES, UPRR SIGNAL CONTRACTOR, SCRRA, UTILITIES, ETC.) MAY OCCUR DURING THE CONSTRUCTION PERIOD OF THIS CONTRACT. ALL ACTIVITIES SHALL BE COORDINATED BY THE CONTRACTOR AND WITH THE APPROVAL OF THE ENGINEER SO AS TO MINIMIZE INTERFERENCE WITH OTHERS.

24. EXISTING RAILROAD SIGNAGE (INCLUDING SPEED SIGNS) SHALL BE MAINTAINED DURING THE CONSTRUCTION PERIOD. ALL RAILROAD SIGNAGE SHALL BE FULLY RESTORED UPON COMPLETION OF EACH DAYS WORK IN ACCORDANCE WITH UPRR ENGINEERING STANDARDS. PRIOR TO CONSTRUCTION, "NO TRESPASSING" SIGNS SHALL BE PLACED IN ACCORDANCE WITH UPRR STD DWG 0538A AND AS SHOWN ON THE DRAWINGS.

25. DIMENSIONS SHOWN IN PARENTHESES INDICATED APPROXIMATE EXISTING DIMENSIONS. WHERE ELEVATIONS ARE SHOWN IN PARENTHESES AT JOIN LOCATIONS. THE CONTRACTOR SHALL VERIFY THESE ELEVATIONS PRIOR TO CONSTRUCTION AND JOIN FEATURES AT EXISTING ELEVATIONS.

ASBUILT

BID NO. 7185

COMPLETION DATE 03/25/2016

R.E. NAME DAVID HATCH

UPRR BRIDGE 55.54 LOS ANGELES SUB

DIGALERT
DIAL TOLL FREE
1-800-422-4133
AT LEAST TWO DAYS BEFORE YOU DIG
UNDERGROUND SERVICE ALERT OF SOUTHERN CALIFORNIA

MOFFATT & NICHOL
3780 KILROY AIRPORT WAY, SUITE 600
LONG BEACH, CALIFORNIA, 90806
562-426-9551

DATE

REGISTERED PROFESSIONAL ENGINEER
M.S. NICHOL
NO. C60129
EXP. 06/30/14
CIVIL
STATE OF CALIFORNIA

MARK	REVISIONS	APPR.	DATE

DESIGNED BY RW DRAWN BY TP CHECKED BY MSN

CITY OF RIVERSIDE, CALIFORNIA
PUBLIC WORKS DEPARTMENT

RIVERSIDE AVE UNDERPASS

GENERAL NOTES G-3

HORIZ. SCALE: AS SHOWN VERT. SCALE: AS SHOWN

ACCT. NO. -
W.O. NO. -

R-4240

SHEET 3 OF 146

FILE NO.

DRAWING NAME: \\ntoppb02\fs_projects\8318 ib13\CADD\Sheet\GENERAL\635501G003.dwg
PLOT DATE: Sep 27, 2016 - 9:18am PLOTTED BY: dleigh

ROADWAY CONSTRUCTION NOTES

1. CONSTRUCT 0.4' HOT MIX ASPHALT (TYPE A) OVER 1' CLASS 2 AGGREGATE BASE.
1A. CONSTRUCT 0.4' HOT MIX ASPHALT (TYPE A) OVER COMPACTED NATIVE SOIL
2. COLD MILL EXISTING 0.4' AC PAVEMENT AND PLACE 0.4' OVERLAY.
3. CONSTRUCT PCC DRIVEWAY APPROACH PER CITY OF RIVERSIDE STD. PLAN NO. 302 TYPE CURB-1
4. CONSTRUCT PCC DRIVEWAY APPROACH PER CITY OF RIVERSIDE STD. PLAN NO. 302, TYPE PL-1
5. CONSTRUCT TYPE I-6" CURB AND GUTTER PER CITY OF RIVERSIDE STD PLAN NO. 200
6. CONSTRUCT TYPE II-8" MEDIAN CURB PER CITY OF RIVERSIDE STD PLAN NO. 200
6A. CONSTRUCT MODIFIED TYPE II CURB (6" FACE) PER CITY OF RIVERSIDE STD PLAN NO. 200
7. CONSTRUCT 3.5" PCC SIDEWALK PER CITY OF RIVERSIDE STD PLAN NO. 325
8. CONSTRUCT TYPE I PCC WHEELCHAIR RAMP PER CITY OF RIVERSIDE STD PLAN NO. 304
9. CONSTRUCT TYPE II PCC WHEELCHAIR RAMP PER CITY OF RIVERSIDE STD PLAN NO. 304 AND DETAIL ON CONSTRUCTION DETAIL SHEET
10. CONSTRUCT TYPE III PCC WHEELCHAIR RAMP PER CITY OF RIVERSIDE STD. PLAN NO. 304
11. CONSTRUCT TYPE II-A PCC WHEELCHAIR RAMP PER CITY OF RIVERSIDE STD. PLAN NO. 304
12. CONSTRUCT C.I.P. RETAINING WALL. SEE STRUCTURAL PLAN FOR DETAIL.
13. CONSTRUCT TOP-DOWN CIDH RETAINING WALL, SEE STRUCTURAL PLAN FOR DETAIL.
14. CONSTRUCT CROSS GUTTER PER CITY OF RIVERSIDE STD PLAN NO. 220
15. CONSTRUCT NEW CHAIN LINK FENCE PER CITY OF RIVERSIDE STD PLAN NO. 380.
16. CONSTRUCT LANDSCAPING AREAS, SEE DETAILS ON LANDSCAPING PLANS.
17. CONSTRUCT MASONRY PILASTER WITH IRON FENCE TO MATCH THE EXISTING FENCE.

UTILITY CONSTRUCTION NOTES

31. CONSTRUCT 8" WATER LINE (BY OTHERS)
32. CONSTRUCT 30" WATER LINE (BY OTHERS)
33. CONSTRUCT 2" WATER LINE (BY OTHERS)
34. CONSTRUCT 8" GAS LINE (BY OTHERS)
35. CONSTRUCT 4" GAS LINE (BY OTHERS)
36. CONSTRUCT TELEPHONE LINE (BY OTHERS)
37. CONSTRUCT 8" SEWER LINE (SEE SEWER PLAN)
38. CONSTRUCT UNDERGROUND ELECTRICAL CONDUIT AND SERVICE (BY OTHERS)
39. CONSTRUCT OVERHEAD ELECTRICAL LINE (BY OTHERS)
40. CONSTRUCT SEWER MANHOLE PER CITY OF RIVERSIDE STD PLAN NO.500
41. CONSTRUCT 24" RCP STORM DRAIN (SEE STORM DRAIN PLAN)
42. CONSTRUCT PUMP STATION (SEE PUMP STATION PLAN)
43. PROTECT EXISTING TELEPHONE LINE
44. PROTECT EXISTING 2" GAS LINE
45. PROTECT EXISTING 4" GAS LINE
46. PROTECT EXISTING 8" GAS LINE
47. PROTECT EXISTING 8" SEWER LINE
48. PROTECT EXISTING UNDERGROUND ELECTRICAL CONDUIT
49. PROTECT EXISTING OVERHEAD ELECTRICAL LINE
50. PROTECT EXISTING 6" WATER LINE
51. PROTECT EXISTING 8" WATER LINE
52. PROTECT EXISTING 20" WATER LINE
53. PROTECT EXISTING 30" WATER LINE
54. PROTECT EXISTING COMMUNICATION LINE
55. CONSTRUCT 10" PVC STORM DRAIN PIPE (SEE STORM DRAIN PLAN)

SEWER CONSTRUCTION NOTES

60. CONSTRUCT PRECAST CONCRETE SEWER MANHOLE PER CITY OF RIVERSIDE STD. PLAN NO. 500.
61. CONSTRUCT 8" SDR 26 PVC SEWER MAIN.
62. CONSTRUCT HOUSE CONNECTION PER RIVERSIDE STD PLAN NO 554.

SIGNING & STRIPING CONSTRUCTION NOTES

80. APPLY 8-INCH SOLID WHITE STRIPE PER CALTRANS STD PLAN A20D, DETAIL 38
81. APPLY 4-INCH SOLID DOUBLE YELLOW STRIPE PER CALTRANS STD PLAN A20A, DETAIL 22
82. APPLY 12-INCH SOLID YELLOW CROSSWALK MARKINGS/LIMITS
83. APPLY 4-INCH DASHED WHITE STRIPE PER CALTRANS STD PLAN A20A, DETAIL 9
84. APPLY PAVEMENT MARKINGS AS SHOWN PER CALTRANS STD PLAN A24A, TYPE IV
85. APPLY PAVEMENT MARKINGS AS SHOWN PER CALTRANS STD PLAN A24A, TYPE I
86. APPLY PAVEMENT MARKINGS AS SHOWN PER CALTRANS STD PLAN A24A, TYPE VI
87. INSTALL SIGNS
88. APPLY 12-INCH SOLID WHITE LIMIT LINE
89. APPLY 4-INCH SOILD WHITE LINE
90. PAINT MEDIAN NOSE & INSTALL RETROREFLECTIVE PAVEMENT MARKERS PER DETAIL "C" ON SHEET SP-1
91. APPLY LEFT EDGELINES PER CALTRANS STD. PLAN A20B, DETAIL 25A
92. APPLY PAVEMENT MARKINGS AS SHOWN PER CALTRANS STD. PLAN A24D
93. APPLY 4-INCH SOLID AND 4-INCH DASHED YELLOW STRIPES PER CALTRANS STD PLAN A20B, DETAIL 32

STORM DRAIN CONSTRUCTION NOTES

100. CONSTRUCT CATCH BASIN PER CITY OF RIVERSIDE STD DRAWING NO 405
101. CONSTRUCT JUNCTION STRUCTURE PER CITY OF RIVERSIDE STD DRAWING NO 421
102. NOT USED
103. CONSTRUCT MANHOLE PER CITY OF RIVERSIDE STD DRAWING NO 430
104. NOT USED
105. INSTALL 18" DIA RCP (D-LOAD PER PLAN), WITH BEDDING CASE 1 (NO SAND) PER CITY OF RIVERSIDE STD DRAWING NO. 452
106. CONSTRUCT JUNCTION STRUCTURE PER RCFC & WCD STD DRAWING NO JS226
107. NOT USED
108. CONSTRUCT CONCRETE COLLAR PER CITY OF RIVERSIDE STD DRAWING NO 424
109. CONSTRUCT REINFORCED CONCRETE SINGLE BOX CULVERT PER CALTRANS STD PLAN D80 (SIZE PER PLAN), WITH BEDDING CASE 1 (NO SAND) PER CITY OF RIVERSIDE STD DRAWING NO. 452
110. CONSTRUCT REINFORCED CONCRETE DOUBLE BOX CULVERT PER CALTRANS STD PLAN D81 (SIZE PER PLAN), WITH BEDDING CASE 1 (NO SAND) PER CITY OF RIVERSIDE STD DRAWING NO. 452
111. NOT USED
112. INSTALL 24" DIA RCP (D-LOAD PER PLAN), WITH BEDDING CASE 1 (NO SAND) PER CITY OF RIVERSIDE STD DRAWING NO. 452
113. INSTALL 36" DIA RCP (D-LOAD PER PLAN), WITH BEDDING CASE 1 (NO SAND) PER CITY OF RIVERSIDE STD DRAWING NO. 452
114. CONSTRUCT CSP INLET PER CITY OF RIVERSIDE STD DRAWING NO 412
115. INSTALL 14" DIA SDR 35 PVC PIPE WITH BEDDING CASE 1 (NO SAND) PER CITY OF RIVERSIDE STD DRAWING NO. 452
116. NOT USED

PUMP STATION CONSTRUCTION NOTES

150. CONSTRUCT 12" DIP
151. CONSTRUCT 8" DIP
152. CONSTRUCT 4" DIP
153. CONSTRUCT 8"X45° DIP FLANGED BEND
154. CONSTRUCT 4"X45° DIP FLANGED BEND
155. CONSTRUCT 4"X90° DIP FLANGED BEND
156. FURNISH AND INSTALL 8" SERIES TF-2 TIDEFLEX CHECK VALVE, BY TIDEFLEX TECHNOLOGIES OR APPROVED EQUAL
157. FURNISH AND INSTALL 4" SERIES TF-2 TIDEFLEX CHECK VALVE, BY TIDEFLEX TECHNOLOGIES OR APPROVED EQUAL
158. CONSTRUCT 8"X90° DIP FLANGED BEND
159. CONSTRUCT 3'X5' BILCO DOUBLE LEAF HATCHES, OR APPROVED EQUAL
160. CONSTRUCT 2.5'X3.0' BILCO DOUBLE LEAF HATCHES, OR APPROVED EQUAL
161. CONSTRUCT REINFORCED CONCRETE DETENTION BASIN
162. CONSTRUCT 4" C2-PG, 64-10 AC OVER COMPACTED NATIVE SOIL
164. CONSTRUCT CHAIN LINK FENCE PER DETAIL 2 / PS-2.1
165. CONSTRUCT 16' WIDE GATE PER DETAIL 1 / PS-2.1
166. INSTALL LINK SEAL, LS-475-S316, CS-8-24, OR APPROVED EQUAL
167. INSTALL LINK SEAL, LS-400-S316, CS-12-24, OR APPROVED EQUAL
168. CONSTRUCT PIPE SUPPORT, SEE DETAIL 1 ON SHEET PS-5
169. CONSTRUCT 4"ø PVC STILL WELL WITH STAINLESS STEEL TOLCO FIG 7 OFFSET PIPE CLAMP SUPPORTS
⚠ 170. NOT USED
171. INSTALL 1¼" SQUARE STEEL TUBE 11 GA.

REMOVAL NOTES

1. SAWCUT EXISTING PAVEMENT
2. REMOVE EXISTING AC PAVEMENT
3. REMOVE EXISTING CONCRETE PAVEMENT
4. REMOVE EXISTING BLOCK WALL
5. RELOCATE FIRE HYDRANT (BY OTHERS)
6. REMOVE EXISTING GUARD POST
7. REMOVE TREE
8. REMOVE CURB & GUTTER
9. REMOVE EXISTING PIPE
10. REMOVE EXISTING CONCRETE SIDEWALK
11. REMOVE EXISTING CROSS GUTTER
12. REMOVE & SALVAGE SIGN
13. REMOVE & SALVAGE EXISTING TRAFFIC SIGNAL
14. REMOVE & SALVAGE EXISTING STREET LIGHT
15. REMOVE ELECTRICAL PULL BOX
16. RELOCATE POWER POLE (BY OTHERS)
17. REMOVE EXISTING ELECTRICAL METER PEDESTAL
18. REMOVE RAILROAD TRAFFIC ARM & SIGNAL (BY OTHERS)
19. REMOVE POLE AND ELECTRICAL BOX (BY OTHERS)
20. ABANDON PORTIONS OF UTILITY CONDUITS AND STRUCTURES
21. REMOVE EXISTING UTILITY MANHOLE (BY OTHERS)
22. REMOVE AND SALVAGE EXISTING BUS STOP EQUIPMENT (DELIVER TO CITY YARD)
23. ABANDON SEWER AND MANHOLE
24. REMOVE EXISTING CONCRETE STRUCTURE
25. REMOVE EXISTING WATER VALVE (BY OTHERS)
26. REMOVE EXISTING WATER METER (BY OTHERS)
27. REMOVE EXISTING GAS VALVE (BY OTHERS)
28. REMOVE EXISTING HANDICAP RAMP
29. REMOVE EXISTING YARD LIGHTS
30. PROTECT IN PLACE TREE
31. REMOVE RAILROAD CONCRETE PANELS BY UPRR
41. REMOVE EXISTING UNDERGROUND ELECTRICAL CONDUIT
42. REMOVE EXISTING OVERHEAD ELECTRICAL LINE
43. REMOVE EXISTING 20" WATER LINE
44. REMOVE EXISTING 30" WATER LINE
45. REMOVE EXISTING 6" WATER LINE
46. REMOVE EXISTING 8" SEWER LINE
47. REMOVE EXISTING 4" GAS LINE
48. REMOVE EXISTING 8" GAS LINE
49. REMOVE EXISTING STORM DRAIN LINE
50. REMOVE EXISTING TELEPHONE LINE
51. REMOVE EXISTING COMMUNICATION LINE
52. REMOVE EXISTING 2" WATER LINE
53. REMOVE EXISTING SEWER LATERAL
54. ABANDON AND REMOVE INTERFERING PORTION OF STORM DRAIN PIPE
55. CUT & PLUG STORM DRAIN PIPE WITH BRICK & MORTAR
56. ADJUST EXISTING MANHOLE TO GRADE
57. REMOVE STORM DRAIN MANHOLE
58. REMOVE CATCH BASIN
59. REMOVE EXISTING WAYSIDE HORN AND SALVAGE TO CITY YARD

ASBUILT

BID NO. 7185
COMPLETION DATE 03/25/2016
R.E. NAME DAVID HATCH

DIGALERT
DIAL TOLL FREE
1-800-422-4133
AT LEAST TWO DAYS BEFORE YOU DIG
UNDERGROUND SERVICE ALERT OF SOUTHERN CALIFORNIA

MOFFATT & NICHOL
3780 KILROY AIRPORT WAY, SUITE 600
LONG BEACH, CALIFORNIA, 90806
562-426-9551

DATE _____

REGISTERED PROFESSIONAL ENGINEER
M.S. Nichol
M.S. NICHOL
NO. C60129
EXP. 06/30/14
CIVIL
STATE OF CALIFORNIA

MARK	REVISIONS	APPR.	DATE
⚠	ELIMINATED NOTES #170	GN	10/28/13

DESIGNED BY RW DRAWN BY TP CHECKED BY MSN

UPRR BRIDGE 55.54 LOS ANGELES SUB

CITY OF RIVERSIDE, CALIFORNIA
PUBLIC WORKS DEPARTMENT

RIVERSIDE AVE UNDERPASS

CONSTRUCTION NOTES G-4

HORIZ. SCALE: AS SHOWN VERT. SCALE: AS SHOWN

ACCT. NO. -
W.O. NO. -

R-4240

SHEET 4 OF 146

FILE NO.

DRAWING NAME: \\retroplb02\lb_projects\6318 lb13\CADD\Sheet\GENERAL\635501D004_Addendum1.dwg
PLOT DATE: Sep 27, 2016 - 9:18am PLOTTED BY: dleigh

ABBREVIATIONS

AC	ASPHALT CONCRETE
ADA	AMERICANS WITH DISABILITIES ACT
ANG	ANGLE
AP:ANG PT	ANGLE POINT
APP	APPROXIMATE
APWA	AMERICAN PUBLIC WORKS ASSOCIATION
AVE	AVENUE
AWWA	AMERICAN WATER WORKS ASSOCIATION
BC	BEGIN HORIZONTAL CURVE
BCR	BEGIN CURVE RETURN
BLVD	BOULEVARD
BW	BACK OF WALK
C&G	CURB AND GUTTER
CB	CATCH BASIN
CF	CURB FACE
CFS	CUBIC FEET PER SECOND
CL	CENTERLINE
CIDH	CAST-IN-DRILLED-HOLE
CLR	CLEAR
CONST	CONSTRUCT:CONSTRUCTION
DCDA	DOUBLE CHECK DETECTOR ASSEMBLY (BUILDING FIRE CONTROL DEVICE)
DEMO	DEMOLISH: DEMOLITION
DI	DUCTILE IRON
DWG	DRAWING
DR	DRIVE
EA	EACH
EC	END HORIZONTAL CURVE
ECR	END CURVE RETURN
EG	EDGE OF GUTTER
ELEC	ELECTRIC
EL: ELEV	ELEVATION
EP	EDGE OF PAVEMENT
ES	EXISTING SURFACE
ESMT	EASEMENT
EXIST	EXISTING
FL	FLOW LINE
FPS	FEET PER SECOND
FS	FINISH SURFACE
GB	GRADE BREAK
H	HEIGHT
HGL	HYDRAULIC GRADE LINE
HORIZ	HORIZONTAL
INT	INTERSECT: INTERSECTION
INV	INVERT
JS	JUNCTION STRUCTURE
L:LC:VC	LENGTH; LENGTH OF CURVE; LENGTH OF VERTICAL CURVE
LACDOPW	LA COUNTY DEPARTMENT OF PUBLIC WORKS
L	LENGTH
LF	LINEAL FEET
LH	LEFT HAND
LT	LEFT
MAX	MAXIMUM
MH	MANHOLE
MIN	MINIMUM
ML	MAIN LINE
MUTCD	MANUAL ON UNIFORM TRAFFIC CONTROL DEVICES
NB	NORTHBOUND
NO	NUMBER
NPDES	NATIONAL POLLUTANT DISCHARGE ELIMINATION SYSTEM
NTS	NOT TO SCALE
OG	ORIGINAL GROUND
PCC	PORTLAND CEMENT CONCRETE: POINT OF COMPOUND CURVE
PG	PROFILE GRADE
PI	POINT OF INTERSECTION
PO	PUSHON
PCS	POINT OF CURVE TO SPIRAL
PIP	PROTECT IN PLACE
POB	POINT OF BEGINNING
POE	POINT OF END
PP	POWER POLE
PRC	POINT OF REVERSE CURVE
PROP	PROPOSED
PS	POINT OF SPIRAL
PSC	POINT OF SPIRAL TO CURVE
PT	POINT OF TANGENT
PVC	POINT OF VERTICAL CURVE
PVI	POINT OF VERTICAL INTERSECT
PVT	POINT OF VERTICAL TANGENT
Q50	50 YEAR STORM FLOW RATE
RCFC+WCD	RIVERSIDE COUNTY FLOOD CONTROL+ WATER CONSERVATION DISTRICT
RCB	REINFORCED CONCRETE BOX
RCP	REINFORCED CONCRETE PIPE
RT	RIGHT
RPU	RIVERSIDE PUBLIC UTILITIES
ROW: R/W	RIGHT OF WAY
RW	RETAINING WALL
S	SLOPE
SB	SOUTHBOUND
SCRRA	SOUTHERN CALIFORNIA REGIONAL RAIL AUTHORITY
SDMH	STORM DRAIN MANHOLE
SHLD	SHOULDER
SHT	SHEET
SMH	SEWER MANHOLE
SPPWC	STANDARD PLAN FOR PUBLIC WORKS CONSTRUCTION
ST	STREET
STA	STATION
STD	STANDARD
SW	SIDEWALK: SOUNDWALL
SWR	SEWER
TC: T/C	TOP OF CURB
TCE	TEMPORARY CONSTRUCTION EASEMENT
TEMP	TEMPORARY
TF	TRACK FEET
T.I.	TRAFFIC INDEX
TO	TURN OUT
TRANS	TRANSITION
TYP	TYPICAL
UG	UNDERGROUND
UPRR	UNION PACIFIC RAILROAD
V50	50 YEAR STORM VELOCITY
V/L	AVERAGE CHANGE IN GRADIENT
VAR	VARIES: VARIABLE
VERT	VERTICAL
W	WIDTH
WCD	WATER CONSERVATION DISTRICT
WTR	WATER
+/-	PLUS OR MINUS

LEGEND

EXISTING:

BATTERY BOX (BB)
BILLBOARD
BUILDING
CABLE TELEVISION LINE (CTV)
CATCH BASIN (CB)
COORDINATE (N2,800,500)
CROSSING GATE & SIGNAL
CURB/GUTTER
CURB INLET
ELECTRICAL UTILITY LINE (e)
FENCE (x x)
FIBER OPTIC LINE (FO)
FIBER OPTIC LINE-LEVEL 3A (L3)
FIBER OPTIC LINE-SPRINT (SP)
FIBER OPTIC LINE-TIME WARNER (FO)
FLOW
GAS LINE (gs)
GRID TICK
GROUND CONTROL POINT (AERIAL)
GUY WIRE
HYDRANT
HEADWALL
LIGHT POLE
LIGHT POST
MANHOLE
METAL BEAM GUARD
METER VAULT
OVERHEAD UTILITY LINE (E(OH))
PALM TREE
PETROLEUM LINE (P)
POINT OF VERTICAL INTERSECTION
POLE
POST
POWER POLE (PP)
SANITARY SEWER LINE (S)
SEWER MANHOLE (S)
SIGN POST
STORM DRAIN LINE (SD)
STREET CENTERLINE
SUBGRADE EARTH
TELECOM OVERHEAD LINE (TC)
TELEPHONE LINE (T)
TELEPHONE POLE (TP)
TELEPHONE MANHOLE (T)
TRACK
MONUMENT
BENCHMARK
GUIDE RAIL (ROADWAY)
TRAFFIC LIGHT
TRAFFIC SIGN
TREE
TREELINE, SHRUBBERY
WALKWAY, PATH
WATER UTILITY LINE (W)
RETAINING WALL

PROPOSED:

CURB AND GUTTER
STREET RIGHT-OF-WAY
SUBGRADE EARTH
TOE OF SLOPE
SAWCUT LINE
STREET CENTERLINE
COLDMILL
PROJECT BENCH MARK
MONUMENT
RETAINING WALL
STREET LIGHT
DAYLIGHT LINE
ELEVATION SHOWN ON PLANS
TRACK REMOVAL
PROPOSED STORM DRAIN (24"SD)
PROPOSED WATER (8"W)
PROPOSED SEWER (8"S)
PROPOSED GAS (4"G)
PROPOSED ELECTRIC (E)
PROPOSED OVERHEAD ELECTRIC (OE)
PROPOSED TELEPHONE (T)
PROPOSED COMMUNICATION
PROPERTY LINE
STREET CENTER LINE
COT LINE
STRIPING LINE

ASBUILT

BID NO. 7185
COMPLETION DATE 03/25/2016
R.E. NAME DAVID HATCH

DIGALERT
DIAL TOLL FREE
1-800-422-4133
AT LEAST TWO DAYS BEFORE YOU DIG
UNDERGROUND SERVICE ALERT OF SOUTHERN CALIFORNIA

MOFFATT & NICHOL
3780 KILROY AIRPORT WAY, SUITE 600
LONG BEACH, CALIFORNIA, 90806
562-426-9551

DATE _____

REGISTERED PROFESSIONAL ENGINEER
W. S. Nichol
M.S. NICHOL
NO. C60129
EXP. 06/30/14
CIVIL
STATE OF CALIFORNIA

MARK	REVISIONS	APPR.	DATE

DESIGNED BY RW DRAWN BY TP CHECKED BY MSN

UPRR BRIDGE 55.54 LOS ANGELES SUB

CITY OF RIVERSIDE, CALIFORNIA
PUBLIC WORKS DEPARTMENT

RIVERSIDE AVE UNDERPASS

LEGEND & ABBREVIATIONS G-5

HORIZ. SCALE: AS SHOWN VERT. SCALE: AS SHOWN

ACCT. NO. -
W.O. NO. -

R-4240

SHEET 5 OF 146

FILE NO.

DRAWING NAME: \\netapp1b02\b_projects\8318 (b13\CADD\Sheet\GENERAL\635501G005.dwg
PLOT DATE: Sep 27, 2016 - 9:16am PLOTTED BY: dengh

DATUM STATEMENTS

HORIZONTAL DATUM: NORTH AMERICAN DATUM OF 1983 (NAD83)

PLANE COORDINATES: CALIFORNIA COORDINATES SYSTEM OF 1983 (CCS 83 1991 ADJUSTMENT PER CITY OF RIVERSIDE) ZONE VI

VERTICAL DATUM: NATIONAL GEODETIC VERTICAL DATUM OF 1929 (NGVD29)

BASIS OF BEARINGS

THE BEARING OF NORTH 35°39'49" WEST AS MEASURED BETWEEN CITY OF RIVERSIDE CONTROL POINTS 2069 AND 0181, AS PUBLISHED BY THE CITY OF RIVERSIDE WAS TAKEN AS THE BASIS OF BEARINGS FOR THIS SURVEY

BENCHMARK

CITY OF RIVERSIDE BM H6-B2
BRASS DISK STAMPED "DEPT. OF PUBLIC WORKS H6-B" IN WELL DN 1.03'
AT THE INTERSECTION OF JURUPA AVENUE & MAGNOLIA AVENUE
ELEVATION: 834.784' NGVD 1929, (1991 ADJUSTMENT)

COMBINATION FACTOR

DISTANCES SHOWN HEREON ARE GRID DISTANCES. GROUND DISTANCES MAY OBTAIN BY DIVIDING GRID DISTANCE BY THE COMBINATION FACTOR OF 0.99997800.

RIVERSIDE CITY CONTROL

2069	2295179.04	6215443.60	834.78	4.5" BRASS CAP DEPT OF PUB WORKS DISK STAMPED H6-B IN WELL AT C/L INT MAGNOLIA AVE & JURUPA AVE DN 1.03'
0181	2293581.67	6216589.89	843.51	PK & WASHER RIVERSIDE CITY ENGINEER W/ AT @ C/L INT OF RIVERSIDE AVE & MERRILL AVE
H6-A2			835.459	PK & WASHER RIVERSIDE CITY ENGINEER @ BASE OF TRAFFIC SIGNAL POLE NE'LY CURB RETURN OF JURUPA & MAGNOLIA
G6-P3			845.459	CHISELED BOX ON CATCH BASIN @ SE'LY CORNER OF TIPPERARY WAY & RIVERSIDE AVENUE
H6-B2			834.784	4.5" BRASS CAP DEPT OF PUB WORKS DISK STAMPED H6-B IN WELL AT C/L INT MAGNOLIA AVE & JURUPA AVE DN 1.03'

AERIAL PANEL POINTS

100	2294283.84	6217448.68	856.08	PK NAIL & WASHER RIVERSIDE CITY ENGR ALONG TRINITY COURT @ BC OF CURVE SE'LY OF TIPPERARY WAY
101	2294048.70	6215267.13	839.53	2X2 HUB & TACK – NO AT @ APP C/L INT ELIZABETH ST & ALLEY
102	2292490.99	6216575.32	836.36	1" IP, PP, & NAIL DN 0.2' @ APP. C/L INT RIVERSIDE AVE & CENTRAL AVE
103	2293319.22	6214926.25	834.62	C–NAIL & TIN W/ AT ON BEATTY DR E/O MAGNOLIA AVE
104	2293581.67	6216589.89	843.51	PK & WASHER RIVERSIDE CITY ENGINEER W/ AT @ C/L INT OF RIVERSIDE AVE & MERRILL AVE (CTRL PT 0181)
105	2293643.10	6217416.19	845.74	SET MAG NAIL & AT ON SUNNYSIDE DR E/O MONO DR
106	2295070.59	6217686.26	888.61	PK NAIL & WASHER RIVERSIDE CITY ENGINEER W/ AT @ PACHAPPA DR & PACHAPPA HILL
107	2295175.08	6216611.30	848.91	PUNCHED SPIKE & WASHER LS 4343 @ C/L INT RIVERSIDE AVE & JURUPA – NO AT
108	2295174.98	6216909.17	850.68	PK NAIL & WASHER RIVERSIDE CITY ENGINEER @ C/L INT JURUPA AVE & HAMILTON DR
109	2295179.04	6215443.60	834.78	4.5" BRASS CAP DEPT OF PUB WORKS DISK STAMPED H6–B IN WELL AT C/L INT MAGNOLIA AVE & JURUPA AVE DN 1.03' (CTRL PT 2069)

OTHER FOUND CADASTRAL POINTS

826081	2295176.89	6216076.55	840.85	PK NAIL & WASHER RIVERSIDE CITY ENGR @ APP C/L INT JURUPA AVE & LAWSON WAY
826082	2295175.99	6216343.82	845.09	PK NAIL & WASHER RIVERSIDE CITY ENGR @ APP C/L INT JURUPA AVE & DEL RAY CT
826083	2295177.89	6215789.67	837.94	PK NAIL & WASHER RIVERSIDE CITY ENGR @ APP C/L INT JURUPA AVE & ELENOR ST
826084	2294046.20	6216061.50	843.07	SET PT BY 4 STRADDLE NAIL TIES ON CRACK OF MH RIM @ APP C/L INT ELIZABETH ST & LAWSON WAY
826085	2294096.18	6216062.17	842.41	RR SPIKE W/ P.M. ALONG LAWSON WAY 50' N'LY C/L INT ELIZABETH ST & LAWSON WAY
826086	2294047.10	6215774.62	841.71	RAMSET NAIL IN AC @ APP. C/L INT ELIZABETH & ST & ELENOR ST
826087	2294028.05	6216047.15	843.01	PK NAIL IN TC IN FRONT OF 3600 ELIZABETH ST
826088	2294068.61	6216035.58	842.36	L&T @ NW'LY COR ELIZABETH ST & LAWSON WAY
826089	2294070.78	6216086.50	842.89	L&T @ NE'LY COR ELIZABETH ST & LAWSON WAY
8260810	2294028.85	6216101.40	843.29	L&T&C–NAIL ""CITY TIE"" IN FRONT OF 3590 ELIZABETH ST
8260811	2294080.97	6216329.44	844.55	1" IP W/ NAIL IN WELL DN 0.3' @ APP C/L INT ELIZABETH ST & DEL RAY CT
829081	2293848.85	6216593.46	846.60	PK NAIL & WASHER RIVERSIDE CITY ENGR @ APP. C/L INT RIVERSIDE AVE & TIPPERARY WAY
829082	2293847.75	6216769.03	845.87	PK NAIL & WASHER RIVERSIDE CITY ENGR @ PI ALONG TIPPERARY WAY NE'LY OF RIVERISDE AVE
829083	2294059.92	6217114.25	846.99	PK NAIL & WASHER RIVERSIDE CITY ENGR @ APP. C/L INT TRINITY CT & TIPPERARY WAY
829084	2294343.18	6217403.52	855.31	PK NAIL & WASHER RIVERSIDE CITY ENGR @ APP. C/L INT TRINITY CT & TIPPERARY WAY
829085	2293961.45	6217191.27	847.32	PK NAIL & WASHER RIVERSIDE CITY ENGR @ BC ALONG TRINITY CT
829086	2293942.26	6217230.45	847.48	PK NAIL & WASHER RIVERSIDE CITY ENGR @ EC ALONG TRINITY CT
829087	2293941.24	6217476.23	853.14	PK NAIL & WASHER RIVERSIDE CITY ENGR @ ANG PT TRINITY CT
829088	2294198.42	6217477.24	856.31	PK NAIL & WASHER RIVERSIDE CITY ENGR @ EC ALONG TRINITY CT
829089	2293800.25	6215264.25	838.23	0.75" IP EMPTY @ INT OF CNTR SECT LINE S34 & S'LY LINE OF ALLEY
8290810	2294048.09	6215460.60	839.09	1" IP W/ NAIL IN WELL DN 1.5' @ ELIZABETH ST ANG PT
902081	2293800.12	6215185.25	837.84	1" IP & TAG RCE 862"" NE'LY COR PCL 2 RS 36/57
902082	2293800.09	6215302.26	838.41	1" IP CRUSHED @ NE'LY COR PCL 3 RS 36/57
902083	2293799.22	6215559.28	839.31	0.75" IP & TAG RCE 862"" NW'LY COR PCL 1 RS 44/88
902084	2293817.70	6215928.67	842.03	0.75" IP EMPTY ON N'LY LINE ALLEY
902085	2293794.77	6215996.74	841.96	PK & TIN IN AC @ APP. NE'LY COR PCL 2 RS 33–91
902086	2293615.60	6215993.77	839.03	N&T RCE 862 IN TC @ P/L PROD RS 44/88
902087	2293616.07	6215793.76	838.14	N&T RCE 862 IN TC @ P/L PROD RS 44/88
902088	2293586.13	6214929.47	835.41	RR SPIKE W/ P.M. DN 0.35' @ APP. CL/L INT DE ANZA & MERRILL
902089	2293079.53	6214923.28	833.04	0.75" IP EMPTY @ APP. C/L INT DE ANZA & BEATTY
1029082	2294176.83	6216567.96	846.47	2" IP & NAIL IN WELL DN 0.7'
1029083	2294181.24	6216537.48	846.64	L&T IN TC
1029086	2295084.43	6217681.96	888.30	PK NAIL & WASHER RIVERSIDE CITY SURVEYOR PACHAPPA DR

SET CONTROL POINTS

812081			837.30	PK NAIL & AT @ 3635 RIVERSIDE PLAZA DR (GOTTSCHALKS) – TBM ONLY
812082			840.42	SET MAG NAIL ON +/– C/L ALONG MERRILL AVE IN FRONT OF AMERICA'S TIRE CO. – TBM ONLY
815081	2294298.31	6216623.71	847.11	SET MAG NAIL & LEAD IN TC IN FRONT OF CLAYSTONE DEL PLAZA APARTMENT SIGN @ 6096 RIVERSIDE AVE
8260812	2294131.23	6216624.87	846.40	SET MAG NAIL & WASHER PSOMAS 8260812
9020810	2294596.12	6216901.68	850.31	SET MAG NAIL IN AC SET @ SPLIT OF CURBS ON HAMILTON DR
911081	2293620.58	6216817.07	843.73	SET MAG NAIL SET IN BACK OF WALK ON SUNNYSIDE DR E/O RIVERSIDE AVE.
912081	2293974.45	6216633.33	850.00	SET MAG NAIL & WASHER "PSOMAS 912081"" IN AC ON E/SIDE OF RIVERSIDE AVE
912082	2294310.60	6216949.36	849.12	SET 1"X2" HUB W/ TACK +/– 11.8' SE'LY OF BUILDING CORNER, +/– 6.5' N'LY OF CARPORT, +/– 8.5 NE'LY OF 18" DIA TREE
1029081	2293644.69	6216562.50	843.05	SET MAG NAIL IN TC @ BCR RIVERSIDE & MERRILL
1029084	2294387.20	6217228.16	853.09	1"X2" & TACK ALONG S'LY SIDE TRACKS
1029085	2295113.48	6217652.60	887.27	SET PAINTED (YELLOW) + ON BRIDGE WALK PACHAPPA DR OVER RR TRACKS

CONTROL NOTES

1. ALL CONTROL IS FOUND CADASTRAL OR CITY CONTROL MONUMENTS UNLESS OTHERWISE NOTED.
2. SEE PSOMAS CONTROL SHEETS FOR ELEVATION ESTABLISHMENT FOR EACH CONTROL POINT.
3. SURVEYS WERE CONDUCTED BETWEEN 8/09 – 10/29/2008 BY CONVENTIONAL SURVEY METHODS (TOTAL STATION AND DIGITAL LEVELS) AND GPS.

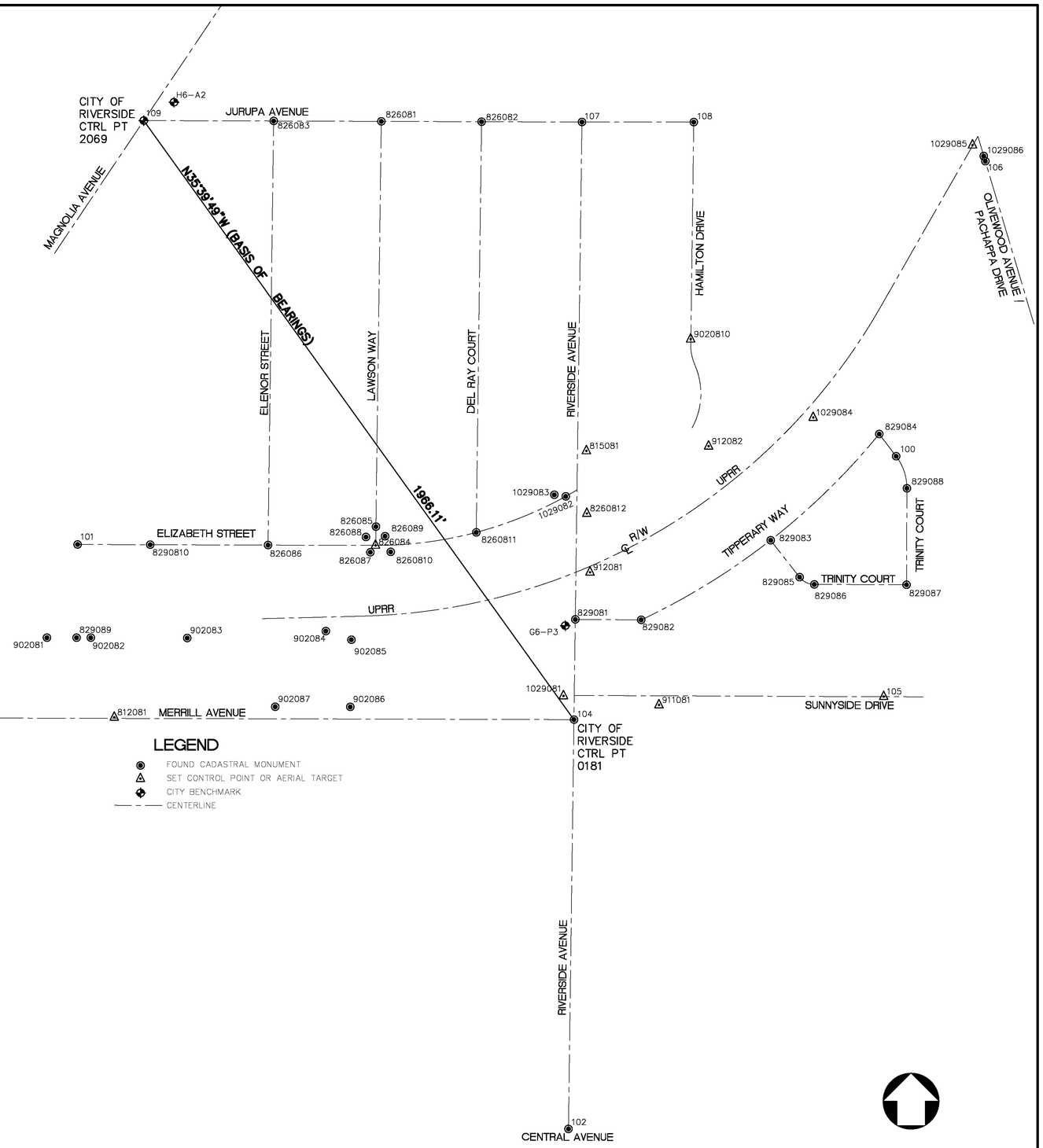

ASBUILT

BID NO. 7185
COMPLETION DATE 03/25/2016
R.E. NAME DAVID HATCH

DIGALERT
DIAL TOLL FREE
1-800-422-4133
AT LEAST TWO DAYS BEFORE YOU DIG
UNDERGROUND SERVICE ALERT OF SOUTHERN CALIFORNIA

PSOMAS
3 Hutton Centre #200
Santa Ana, California 92707
714/751-7373
FAX 714/545-8883

KARI J. LAUNEN, PLS
LICENSE EXPIRES: 9-30-13

PROFESSIONAL LAND SURVEYOR KARI J. LAUNEN No. 5679 Exp. 9/30/13 STATE OF CALIFORNIA

MARK	REVISIONS	APPR.	DATE

DESIGNED BY KVO DRAWN BY KVO CHECKED BY KJL

CITY OF RIVERSIDE, CALIFORNIA
PUBLIC WORKS DEPARTMENT
RIVERSIDE AVE UNDERPASS
SURVEY CONTROL PLAN SP-1
HORIZ. SCALE: 1" = 150' VERT. SCALE: N/A

ACCT. NO. –
W.O. NO. –
R-4240
SHEET 6 OF 139
FILE NO.

DRAWING NAME: M:\2MOF02600\SURVEY\DESIGN\PL\PL-CTRL-RIVERSIDE_2012.dwg
PLOT DATE: Feb 07, 2013 - 2:59pm PLOTTED BY: mu

CONSTRUCTION NOTES

(1) CONSTRUCT 0.4' HOT MIX ASPHALT (TYPE A) OVER 1' CLASS 2 AGGREGATE BASE.

(5) CONSTRUCT TYPE 1 – 6" CURB AND GUTTER PER CITY OF RIVERSIDE STD PLAN NO. 200

(6) CONSTRUCT TYPE 2 – 8" MEDIAN CURB PER CITY OF RIVERSIDE STD PLAN NO. 200

(7) CONSTRUCT 3.5" PCC SIDEWALK PER CITY OF RIVERSIDE STD PLAN NO. 325

(13) CONSTRUCT TOP–DOWN CIDH RETAINING WALL, SEE STRUCTURAL PLAN FOR DETAIL.

REMOVAL NOTES

[2] REMOVE EXISTING AC PAVEMENT

[8] REMOVE CURB & GUTTER

[10] REMOVE EXISTING CONCRETE SIDEWALK

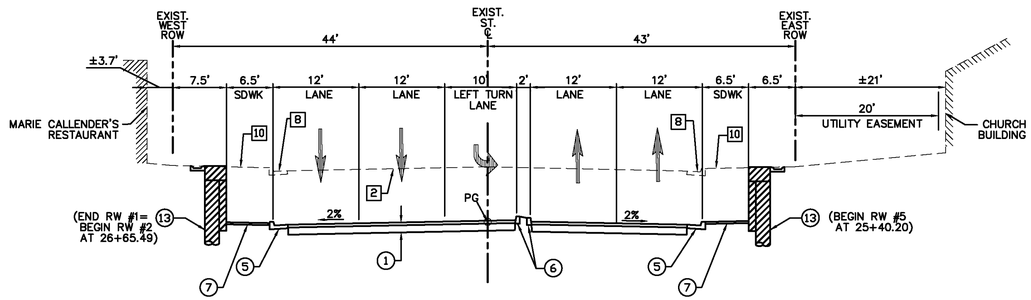

TYPICAL SECTION ALONG RIVERSIDE AVENUE
STA. 25+28.90 TO 27+23.19
NOT TO SCALE

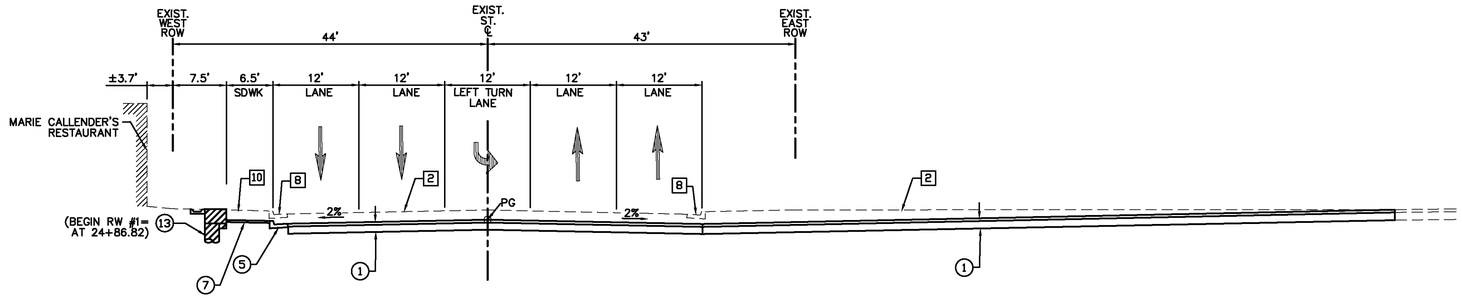

TYPICAL SECTION ALONG RIVERSIDE AVENUE
STA. 24+60 TO 25+28.90
NOT TO SCALE

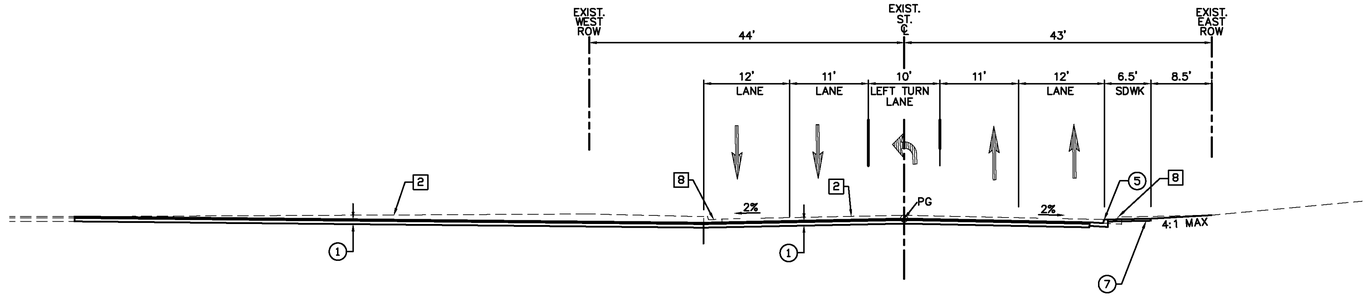

TYPICAL SECTION ALONG RIVERSIDE AVENUE
STA. 23+75 TO 24+60
NOT TO SCALE

ASBUILT

BID NO. 7185

COMPLETION DATE 03/25/2016

R.E. NAME DAVID HATCH

UPRR BRIDGE 55.54 LOS ANGELES SUB

DIGALERT
DIAL TOLL FREE
1-800-422-4133
AT LEAST TWO DAYS BEFORE YOU DIG
UNDERGROUND SERVICE ALERT OF SOUTHERN CALIFORNIA

MOFFATT & NICHOL
3780 KILROY AIRPORT WAY, SUITE 600
LONG BEACH, CALIFORNIA, 90806
562-426-9551

DATE

REGISTERED PROFESSIONAL ENGINEER
M.S. NICHOL
NO. C50129
EXP. 06/30/14
CIVIL
STATE OF CALIFORNIA

MARK	REVISIONS	APPR.	DATE

DESIGNED BY RW DRAWN BY TP CHECKED BY MSN

CITY OF RIVERSIDE, CALIFORNIA
PUBLIC WORKS DEPARTMENT

RIVERSIDE AVE UNDERPASS

TYPICAL CROSS SECTION TS–1

HORIZ. SCALE: AS SHOWN VERT. SCALE: AS SHOWN

ACCT. NO. –
W.O. NO. –

R–4240

SHEET 7 OF 146

FILE NO.

DRAWING NAME: \\netapp1b02\lb_projects\8318 lb13\CADD\Sheet\TYPICAL SELECTION\635501TS001.dwg
PLOT DATE: Sep 27, 2016 – 9:16am PLOTTED BY: dhegh

CONSTRUCTION NOTES

(1) CONSTRUCT 0.4' HOT MIX ASPHALT (TYPE A) OVER 1' CLASS 2 AGGREGATE BASE.

(5) CONSTRUCT TYPE 1 – 6" CURB AND GUTTER PER CITY OF RIVERSIDE STD PLAN NO. 200

(6) CONSTRUCT TYPE 2 – 8" MEDIAN CURB PER CITY OF RIVERSIDE STD PLAN NO. 200

(7) CONSTRUCT 3.5" PCC SIDEWALK PER CITY OF RIVERSIDE STD PLAN NO. 325

(12) CONSTRUCT C.I.P. RETAINING WALL. SEE STRUCTURAL PLAN FOR DETAIL.

(13) CONSTRUCT TOP-DOWN CIDH RETAINING WALL, SEE STRUCTURAL PLAN FOR DETAIL.

REMOVAL NOTES

[2] REMOVE EXISTING AC PAVEMENT

[8] REMOVE CURB & GUTTER

[10] REMOVE EXISTING CONCRETE SIDEWALK

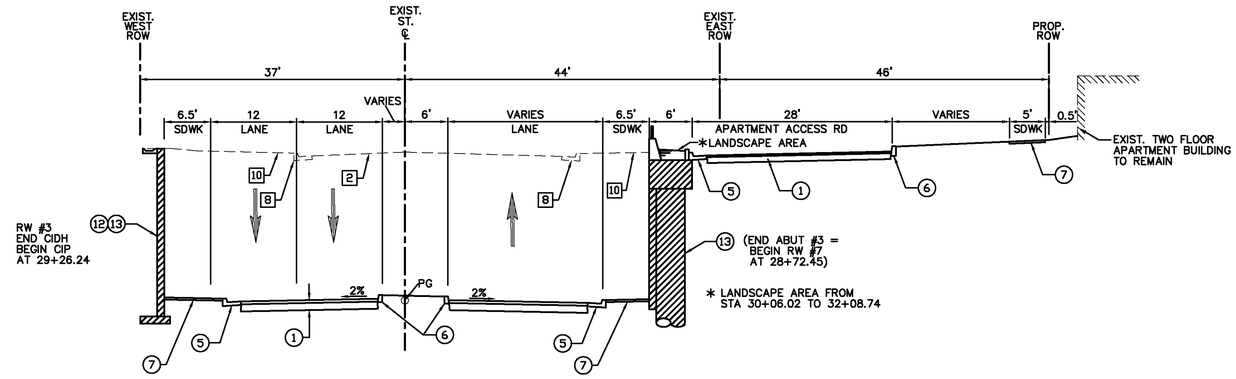

TYPICAL SECTION ALONG RIVERSIDE AVENUE
STA. 28+61.09 TO 30+32.09
NOT TO SCALE

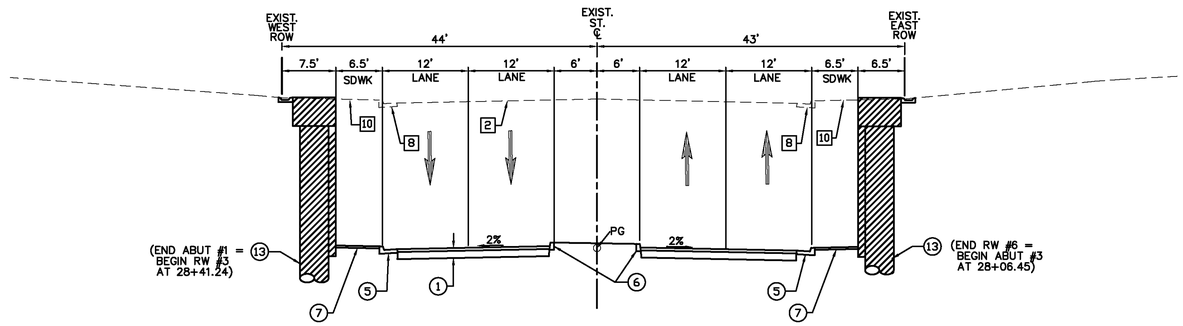

TYPICAL SECTION ALONG RIVERSIDE AVENUE
STA. 27+83.19 TO 28+61.09
NOT TO SCALE

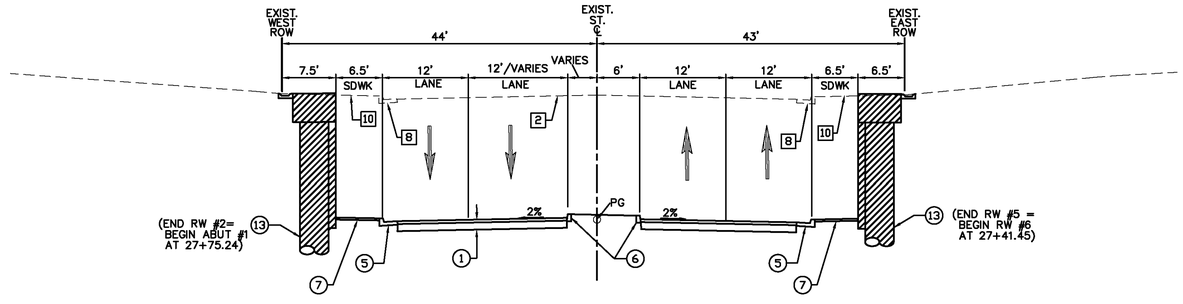

TYPICAL SECTION ALONG RIVERSIDE AVENUE
STA. 27+23.19 TO 27+83.19
NOT TO SCALE

ASBUILT

BID NO. 7185

COMPLETION DATE 03/25/2016

R.E. NAME DAVID HATCH

UPRR BRIDGE 55.54 LOS ANGELES SUB

DIGALERT
DIAL TOLL FREE
1-800-422-4133
AT LEAST TWO DAYS BEFORE YOU DIG
UNDERGROUND SERVICE ALERT OF SOUTHERN CALIFORNIA

MOFFATT & NICHOL
3780 KILROY AIRPORT WAY, SUITE 600
LONG BEACH, CALIFORNIA, 90806
562-426-9551

DATE

REGISTERED PROFESSIONAL ENGINEER
M.S. NICHOL
NO. C60129
EXP. 06/30/14
CIVIL
STATE OF CALIFORNIA

MARK	REVISIONS	APPR.	DATE

DESIGNED BY RW DRAWN BY TP CHECKED BY MSN

CITY OF RIVERSIDE, CALIFORNIA
PUBLIC WORKS DEPARTMENT

RIVERSIDE AVE UNDERPASS

TYPICAL CROSS SECTION TS-2

HORIZ. SCALE: AS SHOWN VERT. SCALE: AS SHOWN

ACCT. NO. -
W.O. NO. -

R-4240

SHEET 8 OF 146

FILE NO.

DRAWING NAME: \\netapp1b02\ib_projects\831B ib13\CADD\Sheet\TYPICAL SELECTION\635501150002.dwg
PLOT DATE: Sep 27, 2016 - 9:16am PLOTTED BY: dlehigh

CONSTRUCTION NOTES

(1) CONSTRUCT 0.4' HOT MIX ASPHALT (TYPE A) OVER 1' CLASS 2 AGGREGATE BASE.

(5) CONSTRUCT TYPE 1 – 6" CURB AND GUTTER PER CITY OF RIVERSIDE STD PLAN NO. 200

(6) CONSTRUCT TYPE 2 – 8" MEDIAN CURB PER CITY OF RIVERSIDE STD PLAN NO. 200

(7) CONSTRUCT 3.5" PCC SIDEWALK PER CITY OF RIVERSIDE STD PLAN NO. 325

(12) CONSTRUCT C.I.P. RETAINING WALL. SEE STRUCTURAL PLAN FOR DETAIL.

(13) CONSTRUCT TOP–DOWN CIDH RETAINING WALL, SEE STRUCTURAL PLAN FOR DETAIL.

REMOVAL NOTES

[2] REMOVE EXISTING AC PAVEMENT

[8] REMOVE CURB & GUTTER

[10] REMOVE EXISTING CONCRETE SIDEWALK

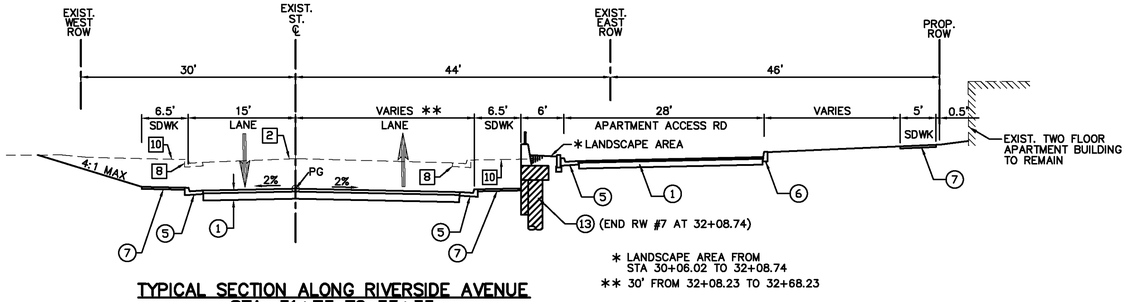

TYPICAL SECTION ALONG RIVERSIDE AVENUE
STA. 31+73 TO 33+35
NOT TO SCALE

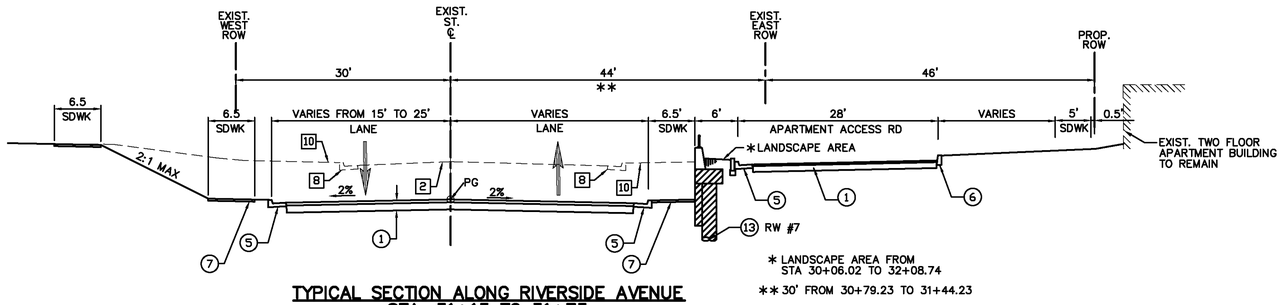

TYPICAL SECTION ALONG RIVERSIDE AVENUE
STA. 31+13 TO 31+73
NOT TO SCALE

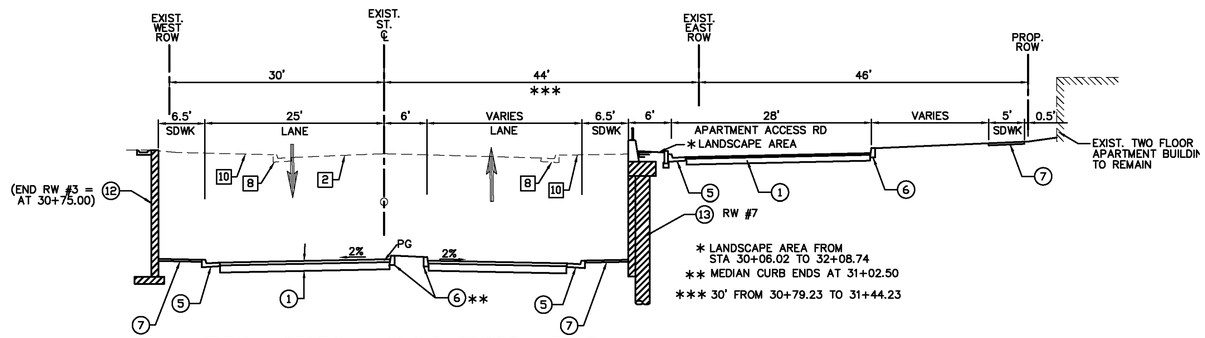

TYPICAL SECTION ALONG RIVERSIDE AVENUE
STA. 30+32.09 TO 31+13
NOT TO SCALE

ASBUILT

BID NO. 7185

COMPLETION DATE 03/25/2016

R.E. NAME DAVID HATCH

UPRR BRIDGE 55.54 LOS ANGELES SUB

DIGALERT
DIAL TOLL FREE
1-800-422-4133
AT LEAST TWO DAYS BEFORE YOU DIG
UNDERGROUND SERVICE ALERT OF SOUTHERN CALIFORNIA

MOFFATT & NICHOL
3780 KILROY AIRPORT WAY, SUITE 600
LONG BEACH, CALIFORNIA, 90806
562-426-9551

DATE _____

REGISTERED PROFESSIONAL ENGINEER
M.S. NICHOL
NO. C60129
EXP. 06/30/14
CIVIL
STATE OF CALIFORNIA

MARK	REVISIONS	APPR.	DATE

DESIGNED BY RW DRAWN BY TP CHECKED BY MSN

CITY OF RIVERSIDE, CALIFORNIA
PUBLIC WORKS DEPARTMENT

RIVERSIDE AVE UNDERPASS

TYPICAL CROSS SECTION TS-3

HORIZ. SCALE: AS SHOWN VERT. SCALE: AS SHOWN

ACCT. NO. –
W.O. NO. –

R-4240

SHEET 9 OF 146

FILE NO.

DRAWING NAME: \\netappib02\ib_projects\6318.19\13\CADD\Sheet\TYPICAL SELECTION\6355011TS003.dwg
PLOT DATE: Sep 27, 2016 - 9:19am PLOTTED BY: dengh

CONSTRUCTION NOTES

(1) CONSTRUCT 0.4' HOT MIX ASPHALT (TYPE A) OVER 1' CLASS 2 AGGREGATE BASE.

(5) CONSTRUCT TYPE 1 – 6" CURB AND GUTTER PER CITY OF RIVERSIDE STD PLAN NO. 200

(6) CONSTRUCT TYPE 2 – 8" MEDIAN CURB PER CITY OF RIVERSIDE STD PLAN NO. 200

(7) CONSTRUCT 3.5" PCC SIDEWALK PER CITY OF RIVERSIDE STD PLAN NO. 325

(13) CONSTRUCT TOP–DOWN CIDH RETAINING WALL, SEE STRUCTURAL PLAN FOR DETAIL.

REMOVAL NOTES

[2] REMOVE EXISTING AC PAVEMENT

[8] REMOVE CURB & GUTTER

[10] REMOVE EXISTING CONCRETE SIDEWALK

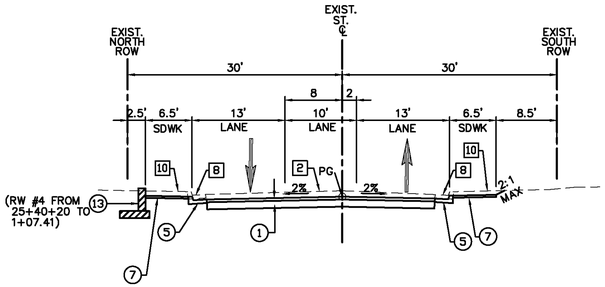

TYPICAL SECTION ALONG SUNNYSIDE DR.
NOT TO SCALE

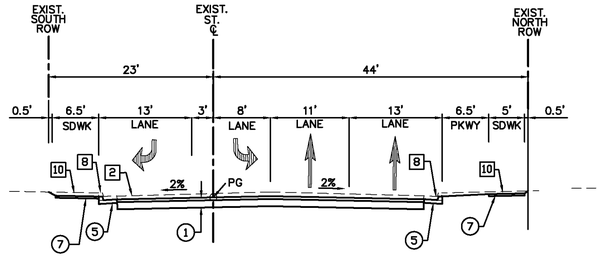

TYPICAL SECTION ALONG MERRILL AVE.
NOT TO SCALE

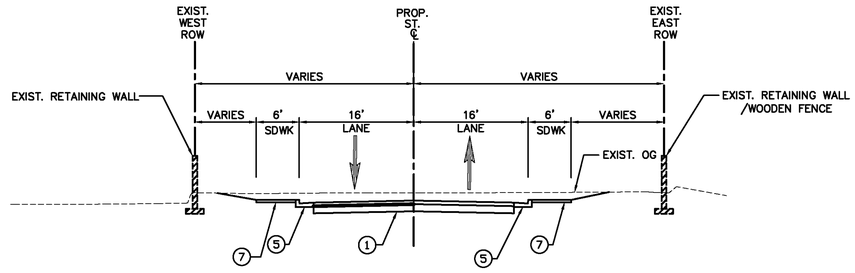

TYPICAL SECTION ALONG MONO DR.
NOT TO SCALE

ASBUILT

BID NO. 7185

COMPLETION DATE 03/25/2016

R.E. NAME DAVID HATCH

UPRR BRIDGE 55.54 LOS ANGELES SUB

DIGALERT
DIAL TOLL FREE
1-800-422-4133
AT LEAST TWO DAYS BEFORE YOU DIG
UNDERGROUND SERVICE ALERT OF SOUTHERN CALIFORNIA

MOFFATT & NICHOL
3780 KILROY AIRPORT WAY, SUITE 600
LONG BEACH, CALIFORNIA, 90806
562-426-9551

DATE

REGISTERED PROFESSIONAL ENGINEER
M.S. NICHOL
NO. C60129
EXP. 06/30/14
CIVIL
STATE OF CALIFORNIA

MARK	REVISIONS	APPR.	DATE

DESIGNED BY RW DRAWN BY TP CHECKED BY MSN

CITY OF RIVERSIDE, CALIFORNIA
PUBLIC WORKS DEPARTMENT

RIVERSIDE AVE UNDERPASS

TYPICAL CROSS SECTION TS-4

HORIZ. SCALE: AS SHOWN VERT. SCALE: AS SHOWN

ACCT. NO. –
W.O. NO. –

R-4240

SHEET 10 OF 146

FILE NO.

DRAWING NAME: \\retroplot02\lb_projects\6318 its13\CADD\Sheet\TYPICAL SELECTION\635501TS004.dwg
PLOT DATE: Sep 27, 2016 - 9:19am PLOTTED BY: dleigh

PHASE A CONSTRUCTION

1A. 2" GAS LINE TO BE CONSTRUCTED BY SCG ALONG TRINITY COURT CONNECTION, 8" WATER LINE TO BE CONSTRUCTED BY CITY OF RIVERSIDE,

1B. CONSTRUCT ROUGH GRADING FOR ACCESS ROAD AND CONSTRUCT TRINITY COURT CONNECTION (MONO DRIVE)

2. CONSTRUCT TIPPERARY WAY CUL-DE-SAC AND CATCH BASIN

3. RELOCATE ELECTRICAL LINES ON TEMPORARY POWER POLES

4A. CONSTRUCT AT&T DUCT BANK, BY AT&T

4B. CONSTRUCT 8" GAS LINE & 2" GAS LINE, BY SCG

5. CONSTRUCT 8" SEWER LINE AND 8" WATER LINE

6. CONSTRUCT PUMP STATION DETENTION BASIN AND DISCHARGE STORM DRAIN (LINE "A")

7. PROTECT IN PLACE EXISTING 30" WATER LINE UNTIL RETAINING WALLS #5, #6, AND #7 ARE CONSTRUCTED

8. PROTECT IN PLACE EXISTING AT&T DUCT BANK UNTIL AT&T COMPLETES THE INSTALLATION OF THE NEW LINES, REFER TO PROJECT SPECIFICATIONS

9. CONSTRUCT TEMPORARY RAILROAD SHOOFLY, AND MOVE RAILROAD OPERATIONS TO SHOOFLY

10. CONSTRUCT CIDH PILES AND SOUTH PORTION OF RAILROAD BRIDGE

11. CONSTRUCT RETAINING WALLS #4, #5, #6, AND #7

12. CONSTRUCT STORM DRAIN LINES "D", CONSTRUCT STORM DRAIN LINE "F"

13. CONSTRUCT TEMPORARY CHAIN LINK FENCE ALONG THE SOUTHERLY UPRR RIGHT OF WAY BETWEEN SHOOFLY TRACK STATIONS 2923+50 AND 2934+50

LEGEND:

◇ BY CITY OR BY OTHERS

○ BY CONTRACTOR

□ BY UPRR

9 STATIONS 2931+12.54 TO 2935+71.80

9 STATIONS 2924+00 TO 2931+12.54
2935+71.80 TO 2945+30

UPRR R/W

UPRR R/W

ELIZABETH ST

TIPPERARY WAY

TRINITY CT.

SUNNYSIDE DR

MERRILL AVE

ASBUILT

BID NO. 7185

COMPLETION DATE 03/25/2016

R.E. NAME DAVID HATCH

40' 0' 40' 80'

SCALE: 1"=40'

UPRR BRIDGE 55.54 LOS ANGELES SUB

DIGALERT
DIAL TOLL FREE
1-800-422-4133
AT LEAST TWO DAYS BEFORE YOU DIG
UNDERGROUND SERVICE ALERT OF SOUTHERN CALIFORNIA

MOFFATT & NICHOL
3780 KILROY AIRPORT WAY, SUITE 600
LONG BEACH, CALIFORNIA, 90806
562-426-9551

DATE

REGISTERED PROFESSIONAL ENGINEER
M.S. NICHOL
NO. C60129
EXP. 06/30/14
CIVIL
STATE OF CALIFORNIA

MARK	REVISIONS	APPR.	DATE

DESIGNED BY RW DRAWN BY TP CHECKED BY MSN

CITY OF RIVERSIDE, CALIFORNIA
PUBLIC WORKS DEPARTMENT

RIVERSIDE AVE UNDERPASS

STAGE CONSTRUCTION – PHASE A SC-1

HORIZ. SCALE: AS SHOWN VERT. SCALE: AS SHOWN

ACCT. NO. –
W.O. NO. –

R-4240

SHEET 11 OF 146

FILE NO.

DRAWING NAME: \\netapp02\lb_projects\8318 lb13\CAD\Sheet\STAGE CONSTRUCTION\635501SC001.dwg
PLOT DATE: Sep 27, 2016 - 9:18am PLOTTED BY: dhegh

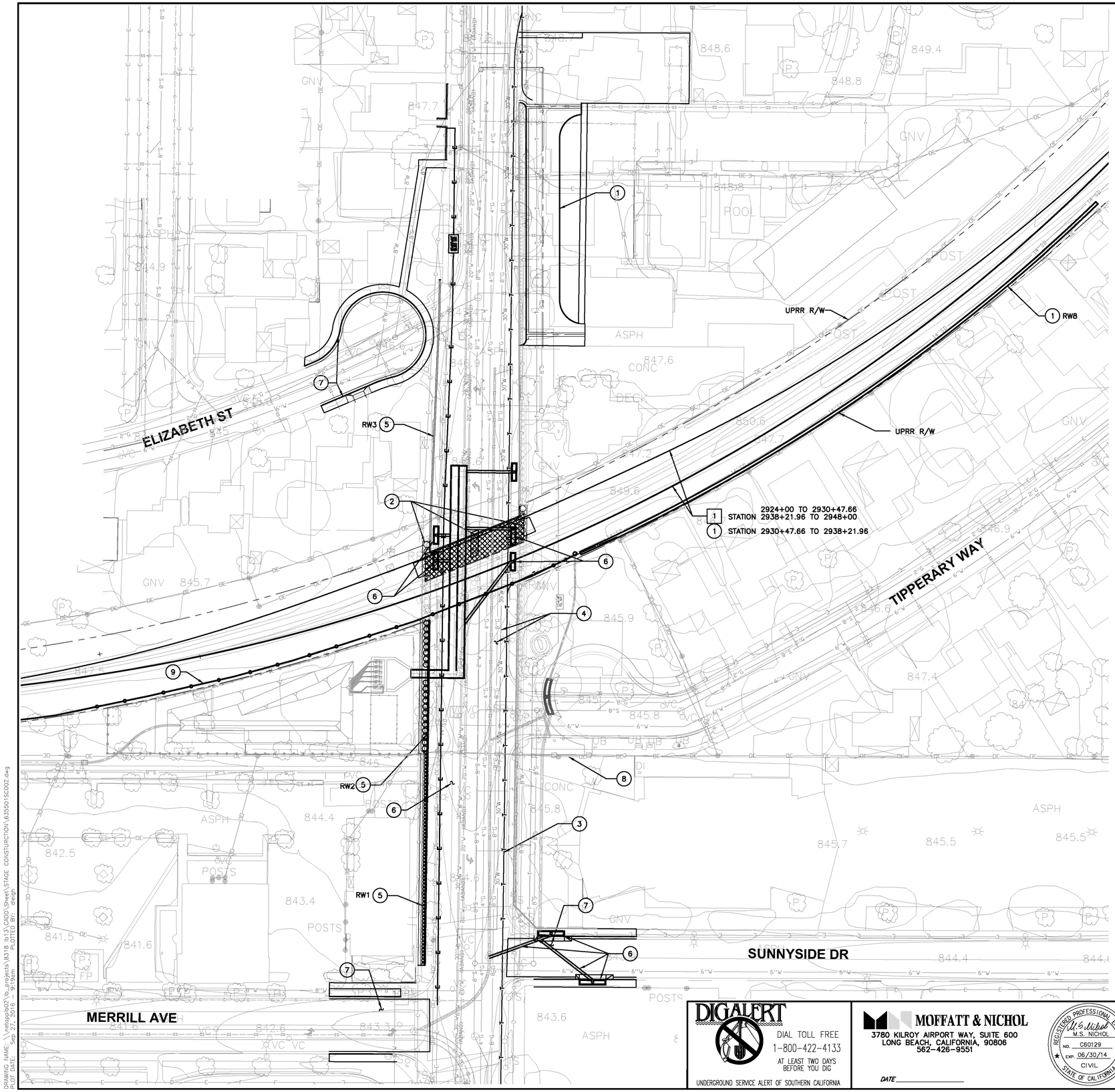

PHASE B CONSTRUCTION

1. CONSTRUCT ACCESS ROAD, RETAINING WALL #8, NEW MAIN TRACK #1, CONNECT STORM DRAIN LINE "F" TO UNDER DRAIN WITHIN UPRR RIGHT-OF-WAY, MOVE RAILROAD OPERATIONS TO MAIN TRACK #1, AND REMOVE SHOOFLY.
2. CONSTRUCT NORTH PORTION OF RAILROAD BRIDGE
3. REMOVE EXISTING AT&T DUCT BANK AFTER AT&T COMPLETES THE INSTALLATION OF NEW LINES
4. EXCAVATE NORTHBOUND RIVERSIDE AVENUE ROADWAY, CONSTRUCT 30" WATER LINE
5. CONSTRUCT RETAINING WALLS #1, #2, AND #3
6. EXCAVATE SOUTHBOUND RIVERSIDE AVENUE, REMOVE EXISTING 30" WATER LINE AND 8" SEWER LINE, CONSTRUCT RCB, STORM DRAIN LINES "B", AND "C", STORM DRAIN LATERALS AND CATCH BASINS
7. CONSTRUCT SIDE STREET IMPROVEMENTS – MERRILL AVENUE, SUNNYSIDE DRIVE, ELIZABETH STREET CUL-DE-SAC
8. PROTECT IN PLACE EXISTING OVERHEAD ELECTRICAL LINES DURING PILE CONSTRUCTION.
9. CONSTRUCT TEMPORARY CHAIN LINK FENCE ALONG THE SOUTHERLY UPRR RIGHT OF WAY BETWEEN SHOOFLY TRACK STATIONS 2919+00 AND 2934+00

LEGEND:

◇ BY CITY OR BY OTHERS

○ BY CONTRACTOR

□ BY UPRR

40' 0' 40' 80'

SCALE: 1"=40'

ASBUILT

BID NO. 7185

COMPLETION DATE 03/25/2016

R.E. NAME DAVID HATCH

DRAWING NAME: \\netapp1b02\tb_projects\8318 tb13\CADD\Sheet\STAGE CONSTRUCTION\635015SC002.dwg
PLOT DATE: Sep 27, 2016 - 9:19am PLOTTED BY: dhigh

DIGALERT
DIAL TOLL FREE
1-800-422-4133
AT LEAST TWO DAYS BEFORE YOU DIG
UNDERGROUND SERVICE ALERT OF SOUTHERN CALIFORNIA

MOFFATT & NICHOL
3780 KILROY AIRPORT WAY, SUITE 600
LONG BEACH, CALIFORNIA, 90806
562-426-9551

DATE

REGISTERED PROFESSIONAL ENGINEER
M.S. NICHOL
NO. C60129
EXP. 06/30/14
CIVIL
STATE OF CALIFORNIA

MARK	REVISIONS	APPR.	DATE

DESIGNED BY RW DRAWN BY TP CHECKED BY MSN

UPRR BRIDGE 55.54 LOS ANGELES SUB

CITY OF RIVERSIDE, CALIFORNIA
PUBLIC WORKS DEPARTMENT

RIVERSIDE AVE UNDERPASS

STAGE CONSTRUCTION – PHASE B SC-2

HORIZ. SCALE: AS SHOWN VERT. SCALE: AS SHOWN

ACCT. NO. –
W.O. NO. –

R-4240

SHEET 12 OF 146

FILE NO.

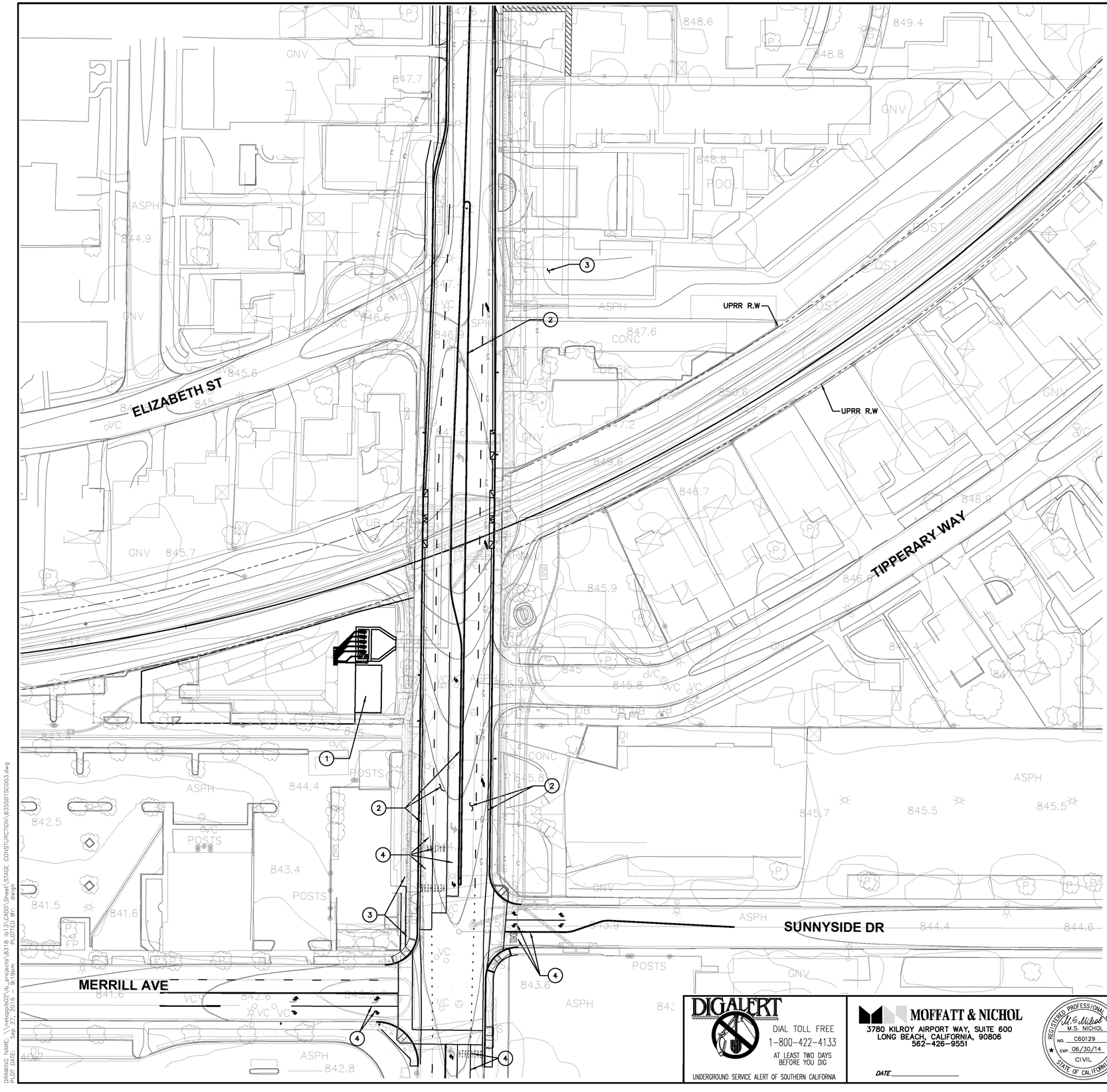

PHASE C CONSTRUCTION

1. CONSTRUCT PUMP STATION WET WELL AND ALL APPURTENANCES
2. CONSTRUCT RIVERSIDE AVENUE PAVEMENT SECTION, CURB AND GUTTER, SIDEWALKS, AND DRIVEWAYS
3. COMPLETE LANDSCAPE AND IRRIGATION
4. COMPLETE FINAL SIGNING, STRIPING, STREET LIGHTING, AND SIGNAL MODIFICATIONS

LEGEND:

- ◇ BY CITY OR BY OTHERS
- ○ BY CONTRACTOR
- □ BY UPRR

40' 0' 40' 80'

SCALE: 1"=40'

ASBUILT

BID NO. 7185

COMPLETION DATE 03/25/2016

R.E. NAME DAVID HATCH

DRAWING NAME: \\ntcpp1d02\tb_projects\8318 tb13\CADD\Sheet\STAGE CONSTRUCTION\635015C003.dwg
PLOT DATE: Sep 27, 2016 - 9:19am PLOTTED BY: dleigh

DIGALERT
DIAL TOLL FREE
1-800-422-4133
AT LEAST TWO DAYS BEFORE YOU DIG
UNDERGROUND SERVICE ALERT OF SOUTHERN CALIFORNIA

MOFFATT & NICHOL
3780 KILROY AIRPORT WAY, SUITE 600
LONG BEACH, CALIFORNIA, 90806
562-426-9551

DATE _____

REGISTERED PROFESSIONAL ENGINEER
M.S. NICHOL
NO. C60129
EXP. 06/30/14
CIVIL
STATE OF CALIFORNIA

MARK	REVISIONS	APPR.	DATE

DESIGNED BY RW DRAWN BY TP CHECKED BY MSN

UPRR BRIDGE 55.54 LOS ANGELES SUB

CITY OF RIVERSIDE, CALIFORNIA
PUBLIC WORKS DEPARTMENT

RIVERSIDE AVE UNDERPASS

STAGE CONSTRUCTION – PHASE C SC-3

HORIZ. SCALE: AS SHOWN VERT. SCALE: AS SHOWN

ACCT. NO. -
W.O. NO. -

R-4240

SHEET 13 OF 146

FILE NO.

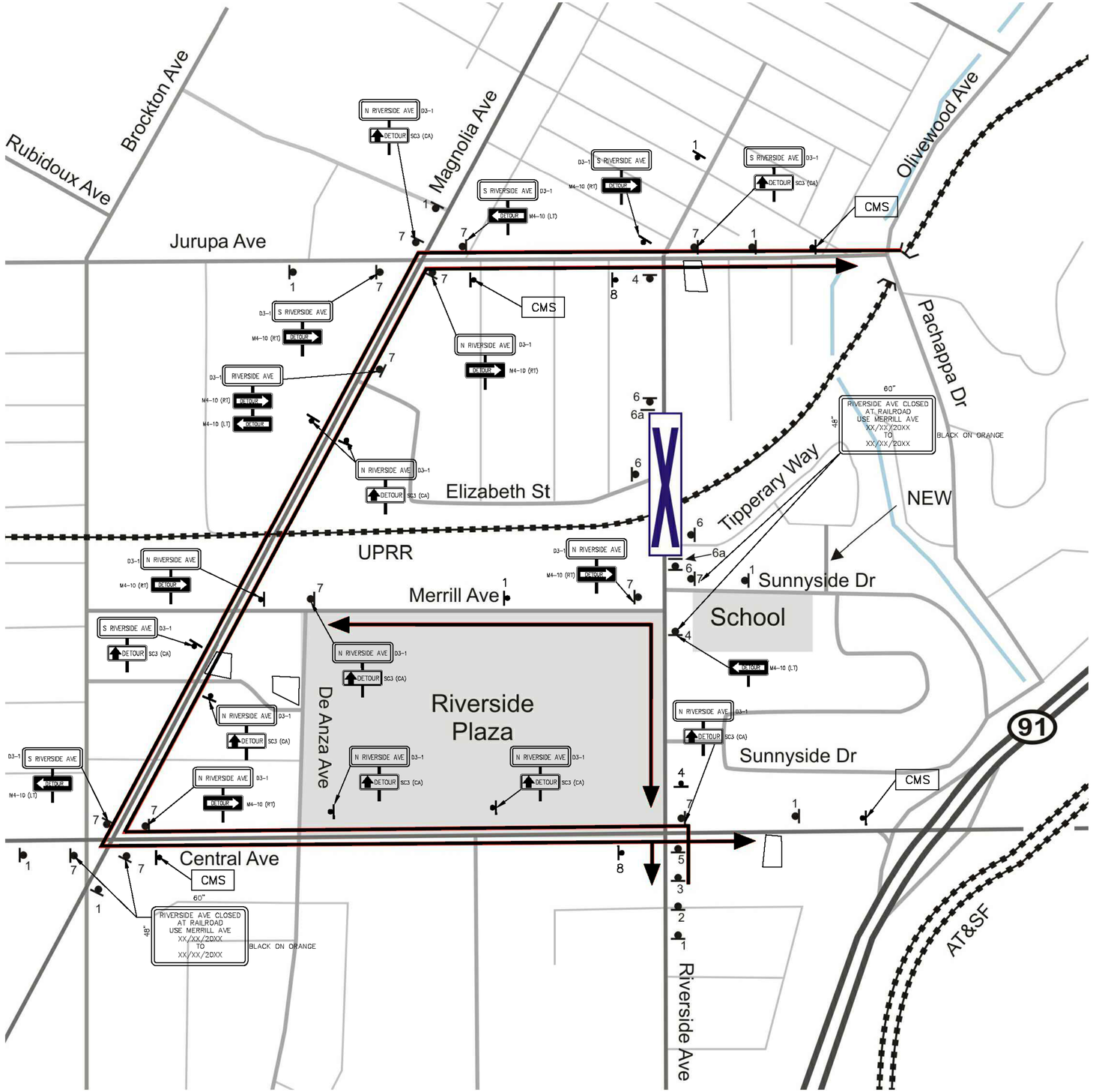

LEGEND

- CONSTRUCT LOCATION (ROAD CLOSURE)
- 1 INFORMATIONAL SIGN (LIMITS OF WORK AREA/DURATION)
- 2 ROAD CLOSED AHEAD SIGN (ROAD CLOSED AHEAD) W20-3
- 3 DETOUR AHEAD SIGN (DETOUR AHEAD) W20-2
- 4 ROAD CLOSED TO THRU TRAFFIC SIGN (ROAD CLOSED TO THRU TRAFFIC) R11-4
- DETOUR ROUTE
- 5 DETOUR SIGN (DETOUR) M4-10(LT)
- 6 ROAD CLOSED SIGN (ROAD CLOSED) R11-2
- 7 RIVERSIDE DETOUR SIGN (RIVERSIDE DETOUR)
- 8 END DETOUR SIGN (END DETOUR) M4-8A
- 6a TYPE III BARRICADE WITH WARNING LIGHTS
- CMS INSTALL CHANGEABLE MESSAGE SIGN

CMS ALTERNATING MESSAGES

RIVERSIDE AVE CLOSED AT RR TRACKS	XX/XX/20XX TO XX/XX/20XX	USE DETOUR

ASBUILT

BID NO. 7185

COMPLETION DATE 03/25/2016

R.E. NAME DAVID HATCH

UPRR BRIDGE 55.54 LOS ANGELES SUB

DIGALERT — DIAL TOLL FREE 1-800-422-4133 AT LEAST TWO DAYS BEFORE YOU DIG — UNDERGROUND SERVICE ALERT OF SOUTHERN CALIFORNIA

MOFFATT & NICHOL
3780 KILROY AIRPORT WAY, SUITE 500
LONG BEACH, CALIFORNIA, 90806
562-426-8551

REGISTERED PROFESSIONAL ENGINEER — M.S. NICHOL — NO. C60129 — EXP. 06/30/14 — CIVIL — STATE OF CALIFORNIA

DATE

MARK	REVISIONS	APPR.	DATE

DESIGNED BY RW DRAWN BY TP CHECKED BY MSN

CITY OF RIVERSIDE, CALIFORNIA
PUBLIC WORKS DEPARTMENT

RIVERSIDE AVE UNDERPASS

DETOUR PLAN DE-1

HORIZ. SCALE: AS SHOWN VERT. SCALE: AS SHOWN

ACCT. NO. -
W.O. NO. -

R-4240

SHEET 14 OF 146

FILE NO.

DRAWING NAME: \\netapp02\ib_projects\831B ib13\CADD\Sheet\STAGE CONSTURCTION\633501DE001.dwg
PLOT DATE: Sep 27, 2016 - 9:19am PLOTTED BY: dlingh

GENERAL NOTES:

1. ALL WORK REQUIREMENTS SHOWN ON THE TRACK DRAWINGS AND NOT OTHERWISE DETAILED SHALL BE ACCOMPLISHED AS SPECIFIED IN UNION PACIFIC RAILROAD SPECIFICATIONS AND THE MOST CURRENT EDITION OF THE AMERICAN RAILWAY ENGINEERING AND MAINTENANCE-OF-WAY ASSOCIATION (AREMA) MANUAL FOR RAILWAY ENGINEERING. IN THE EVENT OF CONFLICTS BETWEEN SPECIFICATIONS, THE MORE RESTRICTIVE SHALL APPLY.

GENERAL REQUIREMENTS:

1. NOTES BELOW ARE NOT INTENDED TO REPLACE SPECIFICATIONS. SEE SPECIFICATIONS FOR REQUIREMENTS IN ADDITION TO GENERAL NOTES.
2. SEE SPECIAL PROVISIONS REGARDING PROTECTION OF RAILWAY INTEREST AND WORK REQUIREMENTS.
3. ALL WORK SHALL CONFORM TO THE REQUIREMENTS OF THESE PLANS AND THE SPECIFICATIONS.
4. ALL FEDERAL, STATE, UNION PACIFIC RAILROAD AND LOCAL SAFETY REGULATIONS ARE TO BE STRICTLY FOLLOWED.
5. THE CONTRACTOR SHALL, ON A DAILY BASIS, REMOVE FROM THE SITE ANY EXCAVATED MATERIAL OR DEBRIS. DISPOSAL OF THE MATERIALS IS THE RESPONSIBILITY OF THE CONTRACTOR. ALL DEBRIS SHALL BE DISPOSED OF OFF THE PROJECT SITE IN A PERMITTED LANDFILL.
6. PRIOR TO BEGINNING CONSTRUCTION THE CONTRACTOR SHALL CHECK THE DRAWINGS AGAINST THE SITE OF THE WORK AND NOTIFY THE ENGINEER IN WRITING OF ANY DISCREPANCIES IN DIMENSIONS OR SITE CONDITIONS. THE CONTRACTOR SHALL NOT BEGIN CONSTRUCTION IN ANY SUCH AFFECTED AREA UNTIL THE DISCREPANCY HAS BEEN RESOLVED.
7. THE CONTRACTOR SHALL PROTECT ADJACENT PROPERTY, UTILITIES, PEDESTRIANS AND VEHICULAR TRAFFIC FROM POTENTIAL DAMAGE DUE TO CONTRACTOR'S OPERATIONS.
8. THE CONTRACTOR SHALL ABIDE BY ALL APPLICABLE FEDERAL, STATE AND LOCAL ENVIRONMENTAL PROTECTION STANDARDS, PERMITS, LAWS AND REGULATIONS.
9. EXISTING INFRASTRUCTURE INCLUDING UTILITIES, DRAINAGE AND OTHER MISCELLANEOUS WORK WHICH IS TO REMAIN, SHALL REMAIN UNDISTURBED AND BE PROTECTED.

DIVISION OF RESPONSIBILITY:

A. RAILROAD

1. INSTALL NEW BALLAST, TIES, RAIL AND OTHER TRACK MATERIALS FOR THE PERMANENT MAIN LINE TRACK.
2. PERFORM TRACK SHIFT AND RECONNECTION WITHIN CLEAR ZONES.
3. RESURFACE THE TRACK AS NEEDED
4. PROVIDE AND INSTALL BRIDGE MARKER SIGNS AT EACH END OF BRIDGE
5. PROVIDE SITE OBSERVATION DURING CONSTRUCTION AT SIGNIFICANT CONSTRUCTION MILESTONES OR AS DESIGNATED BY THE RAILROAD FOR COMPONENT INSTALLATIONS.

B. CONTRACTOR

1. COORDINATE ALL CONSTRUCTION ACTIVITIES WITH THE CITY OF RIVERSIDE AND THE RAILROAD.
2. VERIFY THE LOCATION, RELOCATION, ABANDONMENT, AND/OR TEMPORARY SUPPORT OF ALL UTILITIES AFFECTED BY THE CONSTRUCTION OF THE STRUCTURE AND EMBANKMENT AND COORDINATE THESE ACTIVITIES WITH THE ENGINEER, THE APPROPRIATE UTILITY COMPANIES, AGENCIES AND/OR AUTHORITIES. FOR INFORMATION ON, AND RELOCATION OF, FIBER OPTIC CABLE, CALL 1-800-336-9193.
3. APPLY FOR AND OBTAIN ALL CONSTRUCTION PERMITS NECESSARY TO PERFORM THE WORK.
4. PREPARE SUBGRADE AND INSTALL SUBBALLAST ACCORDING TO SPECIFICATIONS FOR THE PERMANENT MAIN LINE TRACK AND THE SHOOFLY. FURNISH AND INSTALL BALLAST, RAIL, TIES AND OTM FOR THE SHOOFLY TRACK.
5. CONSTRUCTION SUBMITTALS TO BE DESIGNED PER UPRR AND AREMA REQUIREMENTS AND REVIEWED AND APPROVED BY THE ENGINEER.
6. PROVIDE DETAILED TEMPORARY SHORING PLANS TO THE ENGINEER AND RAILROAD FOR APPROVAL BEFORE CONSTRUCTION. CONTRACTOR SHALL HAVE FULL RESPONSIBILITY FOR ANY TEMPORARY SHORING.

UTILITIES:

1. THE CONTRACTOR SHALL CONTACT SOUTHERN CALIFORNIA'S UNDERGROUND SERVICE ALERT AT 1-800-422-4133 SEVENTY-TWO (72) HOURS PRIOR TO THE START DEMOLITION OR CONSTRUCTION TO VERIFY LOCATIONS OF SUBSURFACE UTILITIES PRIOR TO ANY EXCAVATION.
2. THE CONTRACTOR IS TO LOCATE, IDENTIFY AND PROTECT ALL UNDERGROUND AND OVERHEAD UTILITIES AND SERVICES. THE CONTRACTOR IS RESPONSIBLE FOR OBTAINING INFORMATION AS TO THE LOCATION OF UTILITIES, SHOWN AND NOT SHOWN.

EARTHWORK:

1. ALL BACKFILL SHALL BE COMPACTED TO 95% MAXIMUM DRY DENSITY IN ACCORDANCE WITH ASTM D 1557 (MODIFIED PROCTOR).

DRAWING SCHEDULE

RAILROAD SHEETS

SHEET NO.	DESCRIPTION
T1	GENERAL NOTES AND DRAWING SCHEDULE
T2	TRACK GEOMETRY DATA
T3	SHOOFLY TRACK PLAN LAYOUT
T4	MAIN TRACK #1 AND FUTURE PLAN LAYOUT
T5	SHOOFLY TRACK TYPICAL CROSS SECTIONS
T6	MAIN TRACK #1 TYPICAL CROSS SECTIONS
T7	SHOOFLY TRACK - PLAN & PROFILE
T8	SHOOFLY TRACK - PLAN & PROFILE
T9	SHOOFLY TRACK - PLAN & PROFILE
T10	MAIN TRACK #1 - PLAN & PROFILE
T11	MAIN TRACK #1 - PLAN & PROFILE
T12	MAIN TRACK #1 - PLAN & PROFILE

SHEET REFERENCE NOTES:

T - RAILROAD
S - BRIDGE
D - STORM DRAIN
R - RETAINING WALL
U - UTILITY

DIGALERT
DIAL TOLL FREE
1-800-422-4133
AT LEAST TWO DAYS BEFORE YOU DIG
UNDERGROUND SERVICE ALERT OF SOUTHERN CALIFORNIA

MOFFATT & NICHOL
3780 KILROY AIRPORT WAY, SUITE 600
LONG BEACH, CALIFORNIA, 90806
562-426-9551

DATE _____

REGISTERED PROFESSIONAL ENGINEER
M.S. Nichol
M.S. NICHOL
NO. C60129
EXP. 06/30/14
CIVIL
STATE OF CALIFORNIA

MARK	REVISIONS	APPR.	DATE

DESIGNED BY JAT DRAWN BY BAH CHECKED BY CWH

ASBUILT

BID NO. 7185
COMPLETION DATE 03/25/2016
R.E. NAME DAVID HATCH

UPRR BRIDGE 55.54 LOS ANGELES SUB

CITY OF RIVERSIDE, CALIFORNIA
PUBLIC WORKS DEPARTMENT

RIVERSIDE AVE UNDERPASS

GENERAL NOTES AND DRAWING SCHEDULE T-1

HORIZ. SCALE: AS SHOWN VERT. SCALE: AS SHOWN

ACCT. NO. -
W.O. NO. -

R-4240

SHEET 15 OF 146

FILE NO.

DRAWING NAME: \\metropl02\lb_projects\6318 lb13\CADD\Sheet\RAILROAD\6355011001.dwg
PLOT DATE: Sep 27, 2016 - 9:19am PLOTTED BY: dleigh

MAIN TRACK ML-1

CURVE No	POINT	STATION	NORTHING	EASTING	BEARING	DISTANCE	DEGREE (Dc)	RADIUS (R)	DELTA	LENGTH (Lc)	TANGENT	THETA	LENGTH (Ls)
	POB	2924+00.00	2293852.3525	6215677.7833									
					N88°41'42.71"E	137.76'							
	TS	2925+37.76	2293849.2156	6215815.5068									
												10°30'18.27"	553.00'
	SC	2930+90.76	2293898.6100	6216365.7400									
ML1- C1													
	PI	2936+72.84	2293878.1995	6216950.2890			03°48'00.00"	1508.06'	38°02'27.26"	1001.26'	519.87'		
	CS	2940+91.84	2294402.3800	6217209.8058									
												10°30'18.27"	553.00'
	ST	2946+44.84	2294864.7106	6217511.7111									
	POE	2950+79.27	2295240.6271	6217725.8446									

MAIN TRACK ML-2

CURVE No	POINT	STATION	NORTHING	EASTING	BEARING	DISTANCE	DEGREE (Dc)	RADIUS (R)	DELTA	LENGTH (Lc)	TANGENT	THETA	LENGTH (Ls)
	POB	2919+21.62	2293858.8242	6215199.0567									
					N88°46'54.23"E	25.45'							
	TS	2919+47.07	2293858.7273	6215224.5073									
												00°13'57.00"	93.00'
	SC	2920+40.07	2293858.4988	6215317.5070									
ML2- C1													
	PI	2921+61.12	2293857.9500	6215428.5530			00°30'00.00"	11459.19'	01°06'37.71"	222.07'	111.04'		
	CS	2922+62.14	2293860.7057	6215539.5661									
												00°13'57.00"	93.00'
	ST	2923+55.14	2293862.7825	6215632.5429									
					N88°38'34.46"E	190.89'							
	TS	2925+46.04	2293867.3036	6215823.3030									
												08°24'59.65"	460.00'
	SC	2930+06.04	2293900.6577	6216281.7300									
ML2- C2													
	PI	2936+64.88	2293893.8017	6216941.9093			03°40'00.00"	1565.72'	42°09'56.26"	1152.26'	603.62'		
	CS	2941+58.10	2294478.3943	6217248.7238									
												08°24'59.65"	460.00'
	ST	2946+18.10	2294866.2014	6217495.0005									
					N29°38'38.91"E	439.35'							
	POE	2950+57.45	2295248.0463	6217712.6079									

SHOOFLY

CURVE No	POINT	STATION	NORTHING	EASTING	BEARING	DISTANCE	DEGREE (Dc)	RADIUS (R)	DELTA	LENGTH (Lc)	TANGENT	THETA	LENGTH (Ls)
	POB	2924+00.00	2293849.2156	6215677.7833									
					N88°41'42.71"E	198.20'							
	TS	2925+98.20	2293865.8857	6215875.9324									
												04°47'56.49"	240.00'
	SC	2928+38.20	2293865.8857	6216115.5494									
SH- C1													
	PI	2929+51.52	2293861.7744	6216229.1645			04°00'00.00"	1432.69'	11°28'37.59"	286.99'	143.97'		
	CS	2931+25.13	2293924.6825	6216395.9577									
												02°29'58.17"	125.00'
	SC	2932+50.15	2293965.8939	6216513.9608									
SH- C2													
	PI	2933+42.93	2293997.7462	6216601.1185			02°30'00.00"	2292.01'	04°38'03.74"	185.39'	92.75'		
	CS	2934+35.56	2294036.5232	6216685.3684									
												02°41'58.03"	135.00'
	SC	2935+70.57	2294094.8857	6216807.1013									
SH- C3													
	PI	2939+65.08	2294257.9170	6217166.3857			04°00'00.00"	1432.69'	28°44'32.86"	798.89'	408.80'		
	CS	2942+89.13	2294568.7860	6217337.4002									
												04°11'56.93"	210.00'
	ST	2944+99.13	2294748.6654	6217445.6699									
					N29°38'38.91"E	30.61'							
	POE	2945+29.75	2294775.2729	6217460.8122									

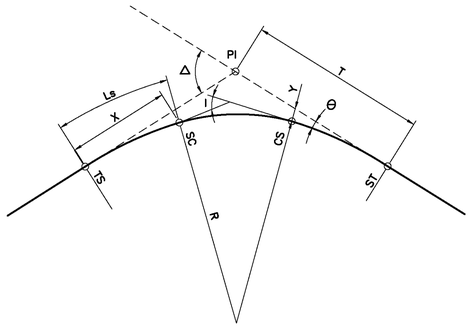

I = CURVE ANGLE
Θ = SPIRAL ANGLE
Δ = SPIRAL DEFLECTION
Ls = LENGTH OF SPIRAL
T = CURVE TANGENT
L = LENGTH OF CURVATURE
Dc = DEGREE OF CURVATURE (CHORD)
R = RADIUS OF CURVATURE
Vf = DESIGN SPEED
Eq. = SUPER ELEVATION
X = SPIRAL TANGENT LENGTH TO OFFSET
Y = SPIRAL TANGENT OFFSET

◯ DENOTES CURVE ID NUMBER

CURVE LAYOUT DIAGRAM
CHORD DEFINITION

ASBUILT
BID NO. 7185
COMPLETION DATE 03/25/2016
R.E. NAME DAVID HATCH

DIGALERT
DIAL TOLL FREE
1-800-422-4133
AT LEAST TWO DAYS BEFORE YOU DIG
UNDERGROUND SERVICE ALERT OF SOUTHERN CALIFORNIA

MOFFATT & NICHOL
3780 KILROY AIRPORT WAY, SUITE 600
LONG BEACH, CALIFORNIA, 90806
562-426-9551

DATE _____

REGISTERED PROFESSIONAL ENGINEER
M.S. Nichol
M.S. NICHOL
NO. C60129
EXP. 06/30/14
CIVIL
STATE OF CALIFORNIA

MARK	REVISIONS	APPR.	DATE

DESIGNED BY JAT DRAWN BY BAH CHECKED BY CWH

UPRR BRIDGE 55.54 LOS ANGELES SUB

CITY OF RIVERSIDE, CALIFORNIA
PUBLIC WORKS DEPARTMENT

RIVERSIDE AVE UNDERPASS

TRACK GEOMETRY DATA T-2

HORIZ. SCALE: AS SHOWN VERT. SCALE: AS SHOWN

ACCT. NO. -
W.O. NO. -

R-4240

SHEET 16 OF 146

FILE NO.

DRAWING NAME: \\metroplib02\lb_projects\6318 its13\CADD\Sheet\RAILROAD\635501T002.dwg
PLOT DATE: Sep 27, 2016 - 9:19am PLOTTED BY: dleigh

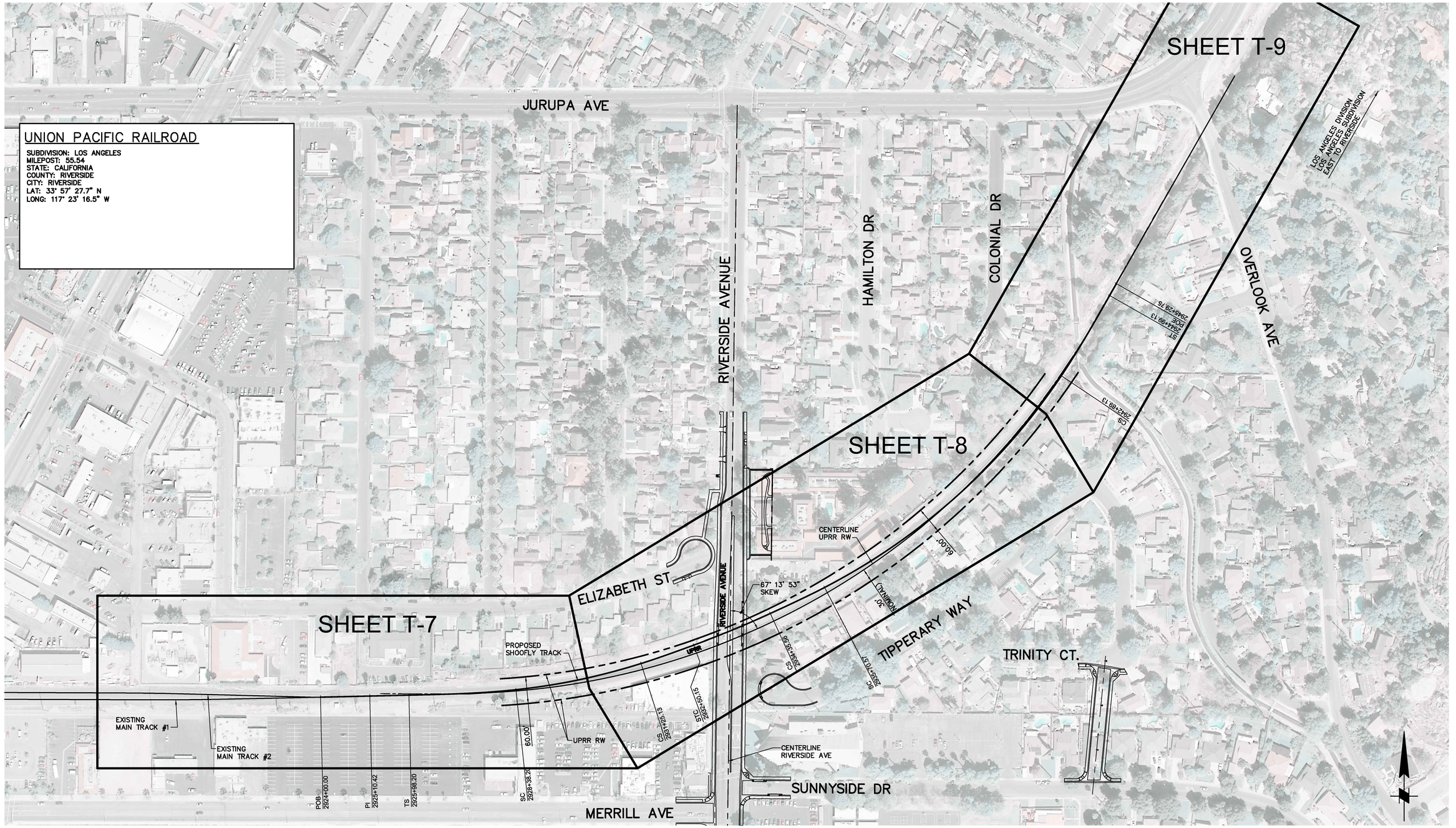

PLAN
SCALE: 1"=100'

100' 0' 100' 200'
SCALE: 1"=100'

LOS ANGELES DIVISION
LOS ANGELES SUBDIVISION
WEST TO ARLINGTON

ASBUILT

BID NO. 7185

COMPLETION DATE 03/25/2016

R.E. NAME DAVID HATCH

DIGALERT
DIAL TOLL FREE
1-800-422-4133
AT LEAST TWO DAYS BEFORE YOU DIG
UNDERGROUND SERVICE ALERT OF SOUTHERN CALIFORNIA

MOFFATT & NICHOL
3780 KILROY AIRPORT WAY, SUITE 600
LONG BEACH, CALIFORNIA, 90806
562-426-9551

DATE _____

REGISTERED PROFESSIONAL ENGINEER
M.S. NICHOL
NO. C60129
EXP. 06/30/14
CIVIL
STATE OF CALIFORNIA

MARK	REVISIONS	APPR.	DATE

DESIGNED BY JAT DRAWN BY BAH CHECKED BY CWH

UPRR BRIDGE 55.54 LOS ANGELES SUB

CITY OF RIVERSIDE, CALIFORNIA
PUBLIC WORKS DEPARTMENT

RIVERSIDE AVE UNDERPASS

SHOOFLY TRACK PLAN LAYOUT T-3

HORIZ. SCALE: AS SHOWN VERT. SCALE: AS SHOWN

ACCT. NO. -
W.O. NO. -

R-4240

SHEET 17 OF 146

FILE NO.

DRAWING NAME: \\netapp602\ls_projects\8318 ls1\CADD\Sheet\RAILROAD\635501T003.dwg
PLOT DATE: Sep 27, 2016 - 9:20am PLOTTED BY: dhigh

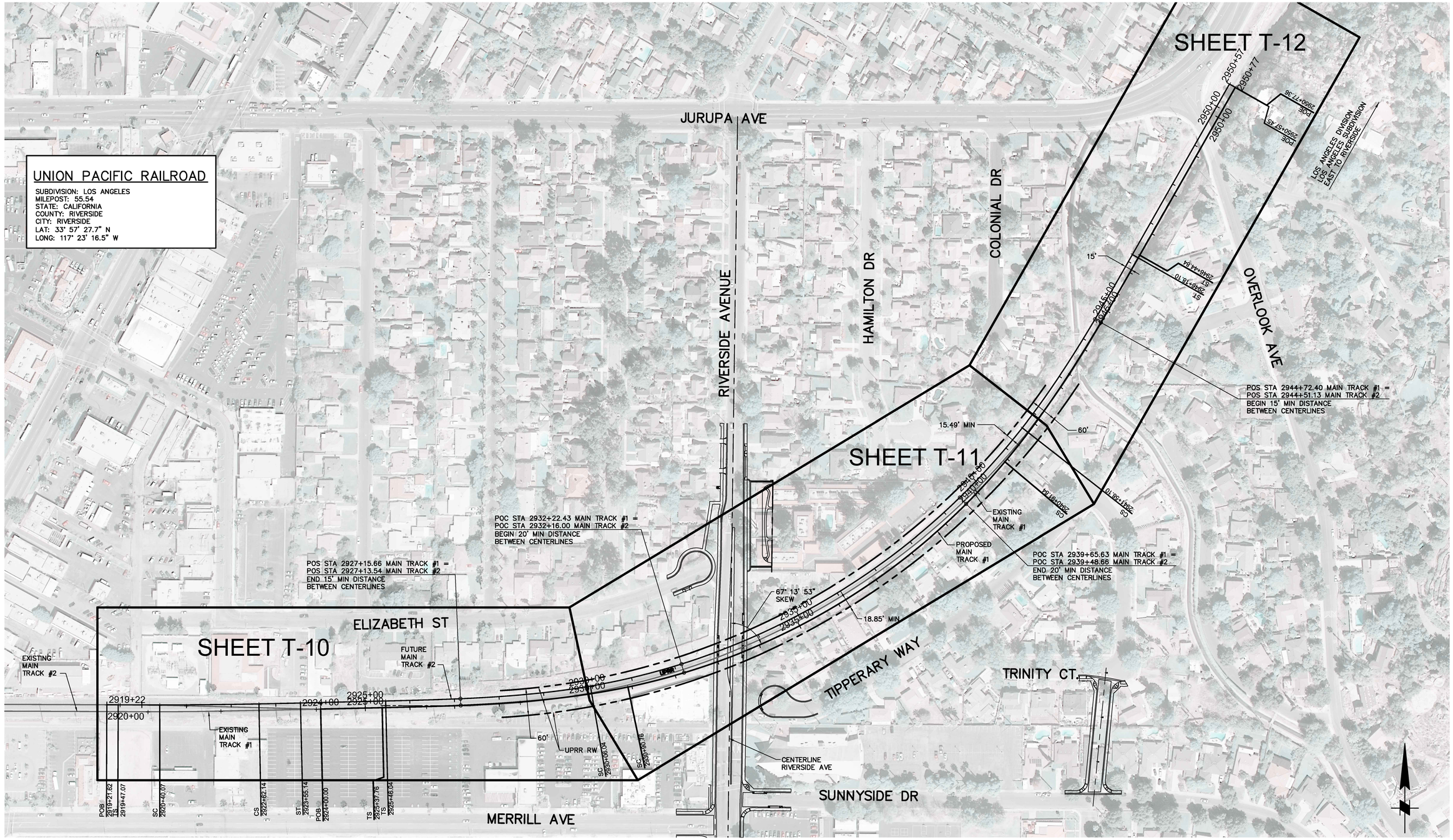

PLAN
SCALE: 1"=100'

100' 0' 100' 200'
SCALE: 1"=100'

LOS ANGELES DIVISION
LOS ANGELES SUBDIVISION
WEST TO ARLINGTON

ASBUILT

BID NO. 7185
COMPLETION DATE 03/25/2016
R.E. NAME DAVID HATCH

DIGALERT
DIAL TOLL FREE
1-800-422-4133
AT LEAST TWO DAYS BEFORE YOU DIG
UNDERGROUND SERVICE ALERT OF SOUTHERN CALIFORNIA

MOFFATT & NICHOL
3780 KILROY AIRPORT WAY, SUITE 600
LONG BEACH, CALIFORNIA, 90806
562-426-9551

DATE

REGISTERED PROFESSIONAL ENGINEER
M.S. NICHOL
NO. C60129
EXP. 06/30/14
CIVIL
STATE OF CALIFORNIA

MARK	REVISIONS	APPR.	DATE

DESIGNED BY JAT DRAWN BY BAH CHECKED BY CWH

UPRR BRIDGE 55.54 LOS ANGELES SUB

CITY OF RIVERSIDE, CALIFORNIA
PUBLIC WORKS DEPARTMENT

RIVERSIDE AVE UNDERPASS

MAIN TRACK #1 & FUTURE PLAN LAYOUT T-4

HORIZ. SCALE: AS SHOWN VERT. SCALE: AS SHOWN

ACCT. NO. -
W.O. NO. -

R-4240

SHEET 18 OF 146

FILE NO.

DRAWING NAME: \\netapp102\ts_projects\8318 ts1\CADD\Sheet\RAILROAD\635501T004.dwg
PLOT DATE: Sep 27, 2016 - 9:42am PLOTTED BY: dhelgh

NOTES:

1. SEE SHEET T-1 FOR DIVISION OF RESPONSIBILITIES BETWEEN THE CONTRACTOR AND THE RAILROAD.
2. PERFORATED 10" PVC UNDERDRAIN PIPE IN 24" BY 24" No. 57 WASHED STONE WRAPPED IN CLASS "A" GEOTEXTILE.
3. REGRADE TO DRAIN AFTER SHOOFLY TRACK REMOVAL.

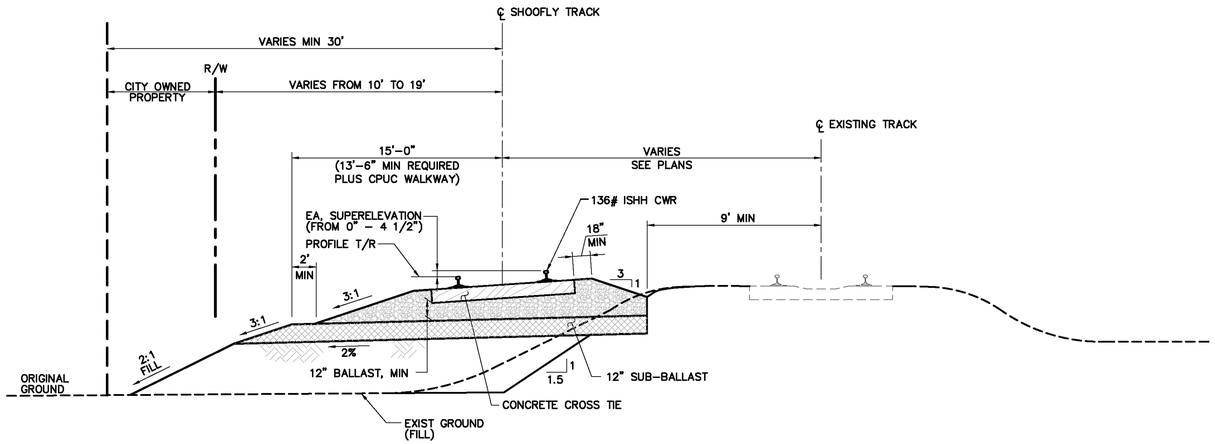

TYPICAL SECTION – SHOOFLY TRACK

NTS

FROM STA 2931+12.54 TO STA 2937+12.72

ASBUILT

BID NO. 7185

COMPLETION DATE 03/25/2016

R.E. NAME DAVID HATCH

DIGALERT
DIAL TOLL FREE
1-800-422-4133
AT LEAST TWO DAYS BEFORE YOU DIG
UNDERGROUND SERVICE ALERT OF SOUTHERN CALIFORNIA

MOFFATT & NICHOL
3780 KILROY AIRPORT WAY, SUITE 600
LONG BEACH, CALIFORNIA, 90806
562-426-9551

DATE

REGISTERED PROFESSIONAL ENGINEER
M.S. NICHOL
NO. C60129
EXP. 06/30/14
CIVIL
STATE OF CALIFORNIA

MARK	REVISIONS	APPR.	DATE

DESIGNED BY JAT DRAWN BY BAH CHECKED BY CWH

UPRR BRIDGE 55.54 LOS ANGELES SUB

CITY OF RIVERSIDE, CALIFORNIA
PUBLIC WORKS DEPARTMENT

RIVERSIDE AVE UNDERPASS

SHOOFLY TRACK TYPICAL SECTIONS T-5

HORIZ. SCALE: AS SHOWN VERT. SCALE: AS SHOWN

ACCT. NO. -
W.O. NO. -

R-4240

SHEET 19 OF 146

FILE NO.

DRAWING NAME: \\netapp1b02\lb_projects\8318 (b13)\CADD\Sheet\RAILROAD\635501T005.dwg
PLOT DATE: Sep 27, 2016 - 9:26am PLOTTED BY: dleigh

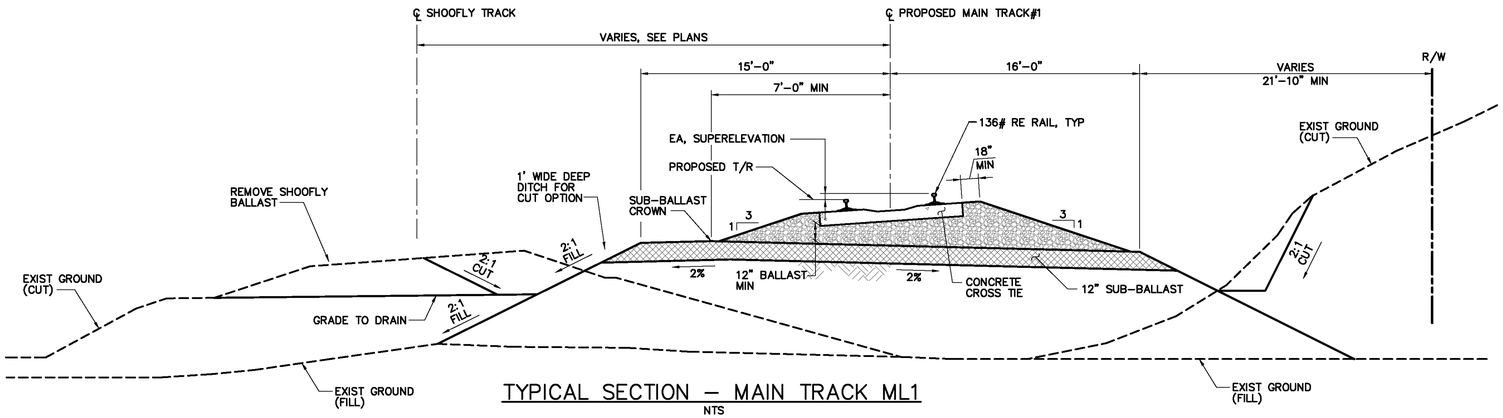

TYPICAL SECTION – MAIN TRACK ML1

NTS

FROM STA 2924+00.00 TO STA 2934+18.00
FROM STA 2939+38.70 TO STA 2946+44.84

* BALLAST, RAIL AND TIES TO BE FURNISHED BY THE CONTRACTOR, INSTALLED BY UPRR.

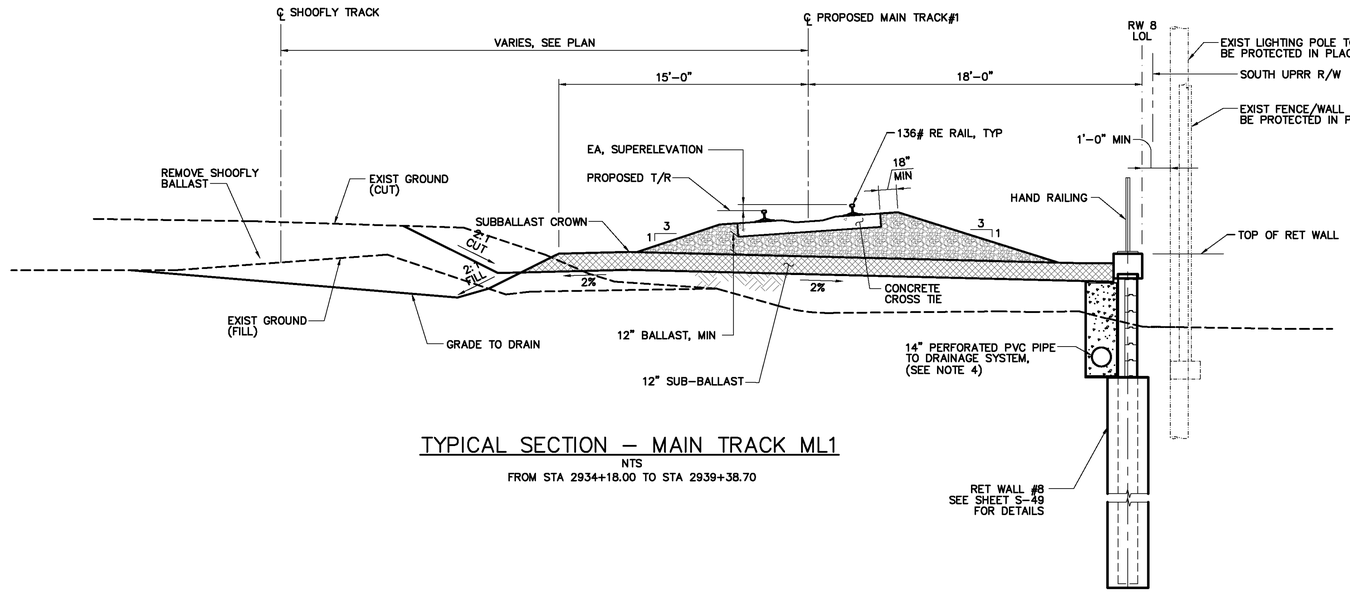

TYPICAL SECTION – MAIN TRACK ML1

NTS

FROM STA 2934+18.00 TO STA 2939+38.70

** SUBGRADE AND SUB–BALLAST TO BE PREPARED BY THE CONTRACTOR. REFER TO SPECIFICATIONS FOR WORK DETAILS AND CONDITIONS.

NOTES:

1. SEE SHEET T–1 FOR DIVISION OF RESPONSIBILITIES BETWEEN THE CONTRACTOR AND THE RAILROAD.
2. SEE STRUCTURAL PLANS FOR RETAINING WALL DETAILS, CONCRETE CHANNEL DETAILS, AND BRIDGE TYPICAL SECTIONS.
3. PERFORATED 14" PVC UNDERDRAIN PIPE IN 26" BY 72" No. 57 WASHED STONE WRAPPED IN CLASS "A" GEOTEXTILE.

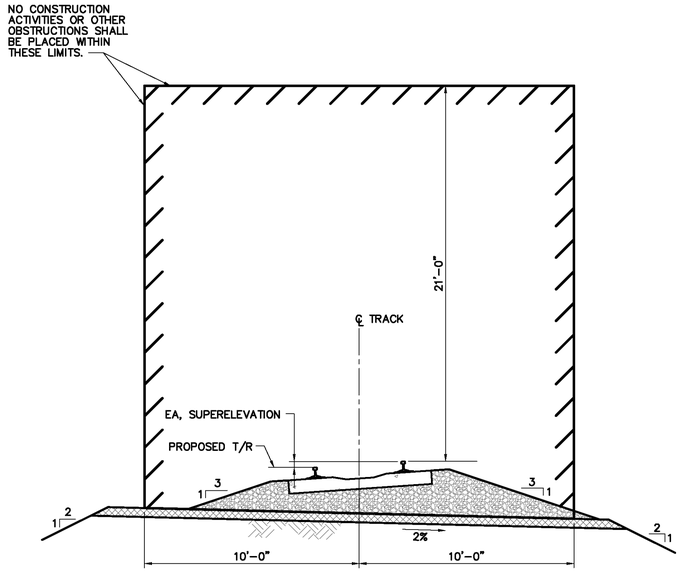

MINIMUM CONSTRUCTION CLEARANCE ENVELOPE

NORMAL TO RAILROAD

ASBUILT

BID NO. 7185
COMPLETION DATE 03/25/2016
R.E. NAME DAVID HATCH

UPRR BRIDGE 55.54 LOS ANGELES SUB

DIGALERT — DIAL TOLL FREE 1-800-422-4133 — AT LEAST TWO DAYS BEFORE YOU DIG — UNDERGROUND SERVICE ALERT OF SOUTHERN CALIFORNIA

MOFFATT & NICHOL
3780 KILROY AIRPORT WAY, SUITE 600
LONG BEACH, CALIFORNIA, 90806
562–426–9551

DATE

REGISTERED PROFESSIONAL ENGINEER — M.S. NICHOL — NO. C60129 — EXP. 06/30/14 — CIVIL — STATE OF CALIFORNIA

MARK	REVISIONS	APPR.	DATE

DESIGNED BY JAT DRAWN BY BAH CHECKED BY CWH

CITY OF RIVERSIDE, CALIFORNIA
PUBLIC WORKS DEPARTMENT

RIVERSIDE AVE UNDERPASS

MAIN TRACK ML1 TYPICAL SECTIONS T–6

HORIZ. SCALE: AS SHOWN VERT. SCALE: AS SHOWN

ACCT. NO. –
W.O. NO. –

R–4240

SHEET 20 OF 146

FILE NO.

DRAWING NAME: \\ntoppb02\fs_projects\8318 ls13\CADD\Sheet\RAILROAD\635501T006.dwg
PLOT DATE: Sep 27, 2016 – 9:20am PLOTTED BY: dleigh

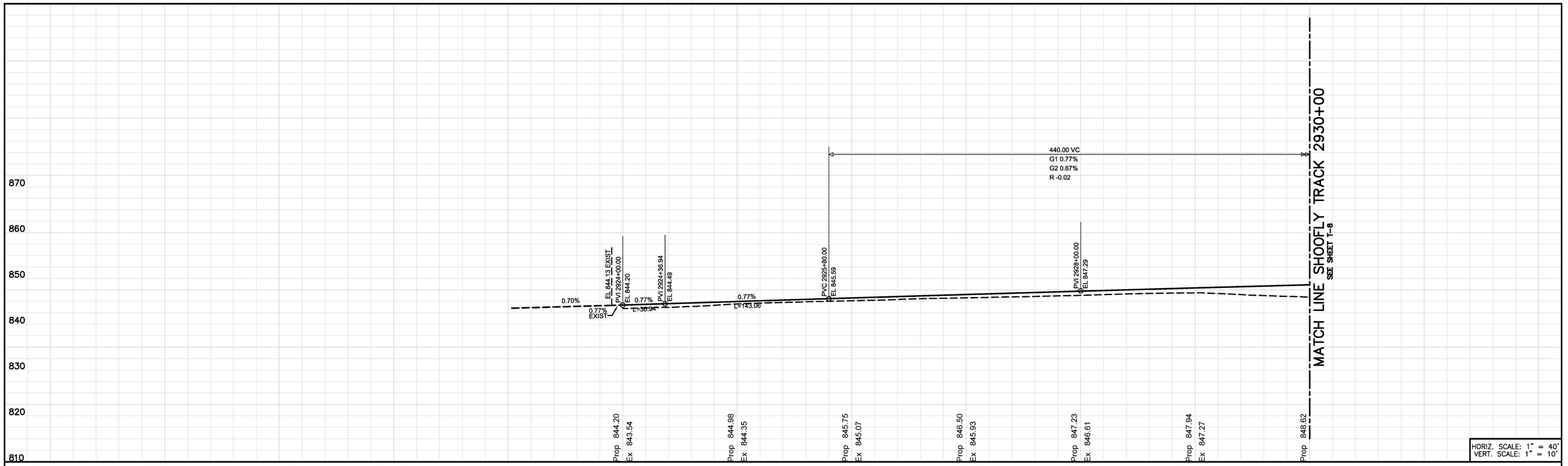

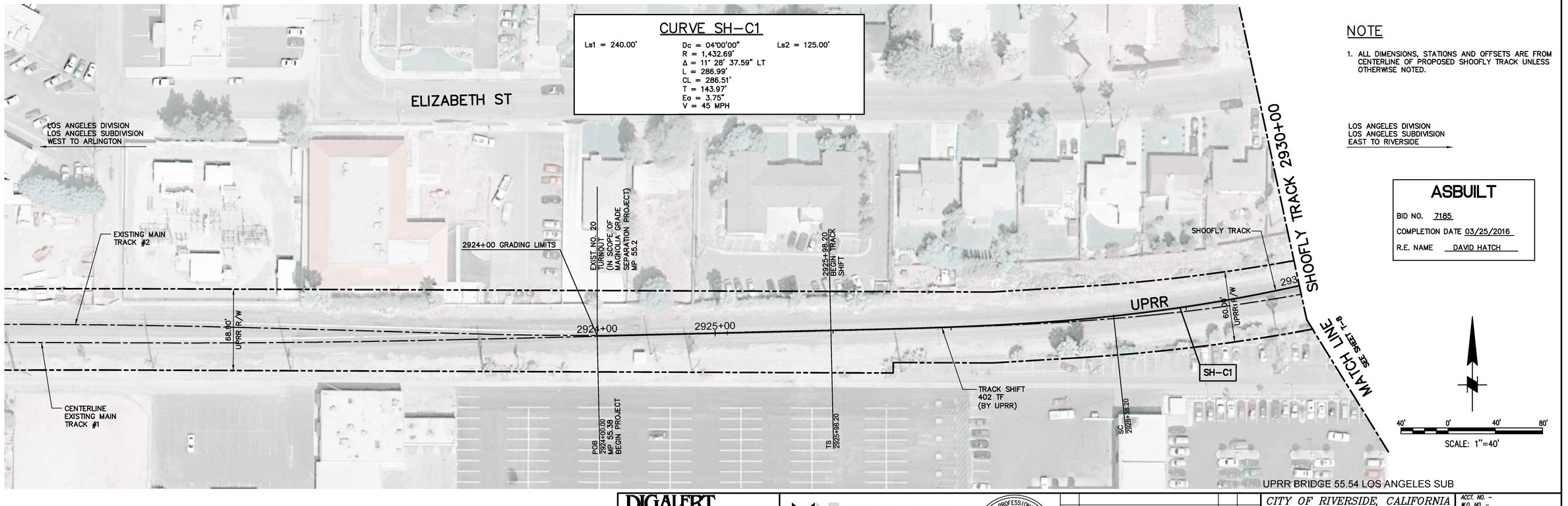

NOTE

1. ALL DIMENSIONS, STATIONS AND OFFSETS ARE FROM CENTERLINE OF PROPOSED SHOOFLY TRACK UNLESS OTHERWISE NOTED.

ASBUILT

BID NO. 7185

COMPLETION DATE 03/25/2016

R.E. NAME DAVID HATCH

UPRR BRIDGE 55.54 LOS ANGELES SUB

DIGALERT
DIAL TOLL FREE
1-800-422-4133
AT LEAST TWO DAYS BEFORE YOU DIG
UNDERGROUND SERVICE ALERT OF SOUTHERN CALIFORNIA

MOFFATT & NICHOL
3780 KILROY AIRPORT WAY, SUITE 600
LONG BEACH, CALIFORNIA, 90806
562-426-9551

DATE _____

REGISTERED PROFESSIONAL ENGINEER
M.S. NICHOL
NO. C60129
EXP. 06/30/14
CIVIL
STATE OF CALIFORNIA

MARK	REVISIONS	APPR.	DATE

DESIGNED BY JAH DRAWN BY BAH CHECKED BY CWH

CITY OF RIVERSIDE, CALIFORNIA
PUBLIC WORKS DEPARTMENT

RIVERSIDE AVE UNDERPASS

SHOOFLY TRACK – PLAN & PROFILE T-7

HORIZ. SCALE: AS SHOWN VERT. SCALE: AS SHOWN

ACCT. NO. –
W.O. NO. –

R-4240

SHEET 21 OF 146

FILE NO.

DRAWING NAME: \\netapp\o2\Ib_projects\8318 Ib13\CADD\Sheet\RAILROAD\635011007.dwg
PLOT DATE: Sep 27, 2016 - 8:20am PLOTTED BY: sleigh

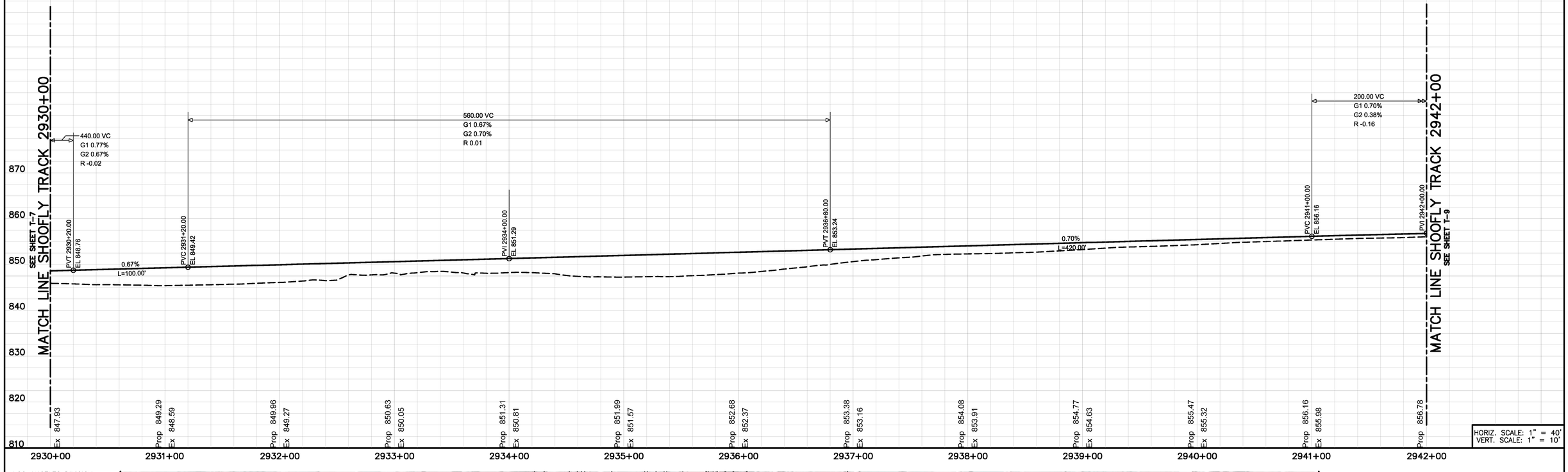

CURVE SH-C1

Ls1 = 240.00'
Dc = 04°00'00"
R = 1,432.69'
Δ = 11° 28' 37.59" LT
L = 286.99'
CL = 286.51'
T = 143.97'
Ea = 3.75"
V = 45 MPH
Ls2 = 125.00'

CURVE SH-C2

Dc = 02°30'00"
R = 2,292.01'
Δ = 04° 38' 03.74" LT
L = 185.39'
CL = 185.34'
T = 92.75'
Ea = 1.5"
V = 45 MPH

CURVE SH-C3

Dc = 04°00'00"
R = 1,432.69'
Δ = 28° 44' 32.86"
L = 718.71'
CL = 711.20'
T = 367.08'
Ea = 3.75"
V = 45 MPH

NOTES

1. ALL DIMENSIONS, STATIONS AND OFFSETS ARE FROM CENTERLINE OF PROPOSED SHOOFLY TRACK UNLESS OTHERWISE NOTED.
2. DIMENSIONS TO RETAINING WALLS ARE TO NEAR INSIDE FACE.
3. SEE SHEET T-7 FOR CURVE DATA.
4. CONTRACTOR SHALL DETERMINE THE LOCATIONS AND LIMITS OF TEMPORARY SHORING AS REQUIRED FOR CONSTRUCTION OF THE SHOOFLY TRACK. FOR EACH LOCATION, CONTRACTOR SHALL SUBMIT TEMPORARY SHORING DESIGN AND SHOP DRAWINGS TO UPRR FOR APPROVAL. THE DESIGN CALCULATIONS SHALL BEAR THE SEAL OF A CALIFORNIA REGISTERED CIVIL OR STRUCTURAL ENGINEER.

UPRR BRIDGE 55.54 LOS ANGELES SUB

ASBUILT
BID NO. 7185
COMPLETION DATE 03/25/2016
R.E. NAME DAVID HATCH

DIGALERT
DIAL TOLL FREE
1-800-422-4133
AT LEAST TWO DAYS BEFORE YOU DIG
UNDERGROUND SERVICE ALERT OF SOUTHERN CALIFORNIA

MOFFATT & NICHOL
3780 KILROY AIRPORT WAY, SUITE 600
LONG BEACH, CALIFORNIA, 90806
562-426-9551

REGISTERED PROFESSIONAL ENGINEER
M.S. NICHOL
NO. C60129
EXP. 06/30/14
CIVIL
STATE OF CALIFORNIA

DATE _____

MARK	REVISIONS	APPR.	DATE

DESIGNED BY JAH DRAWN BY BAH CHECKED BY CWH

CITY OF RIVERSIDE, CALIFORNIA
PUBLIC WORKS DEPARTMENT
RIVERSIDE AVE UNDERPASS
SHOOFLY TRACK – PLAN & PROFILE T-8
HORIZ. SCALE: AS SHOWN VERT. SCALE: AS SHOWN

ACCT. NO. –
W.O. NO. –
R-4240
SHEET 22 OF 146
FILE NO.

DRAWING NAME: \\netapp102\ib_projects\18318 ib12\CADD\Sheet\RAILROAD\635501T008.dwg
PLOT DATE: Sep 27, 2016 - 8:20am PLOTTED BY: dleigh

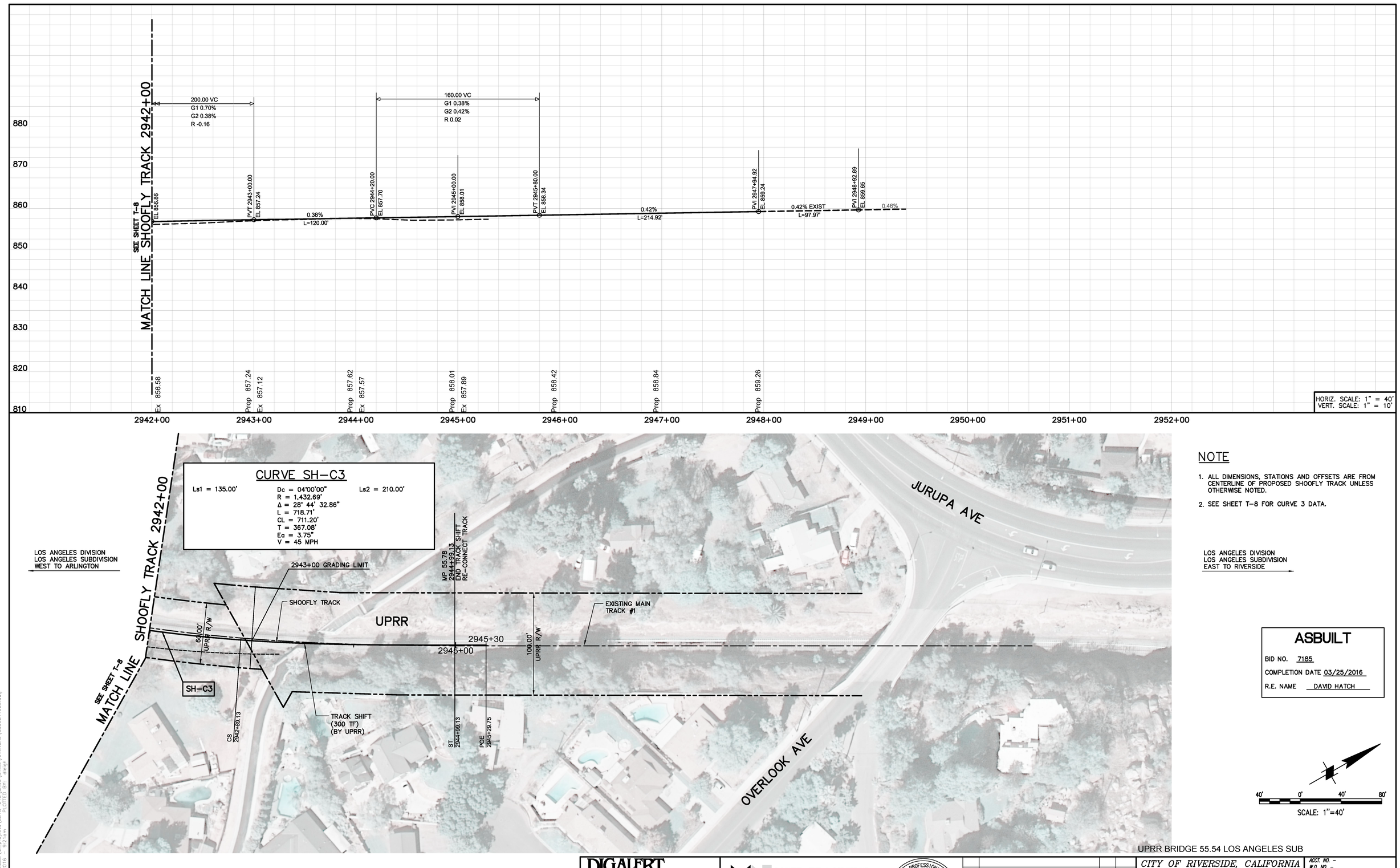

NOTE

1. ALL DIMENSIONS, STATIONS AND OFFSETS ARE FROM CENTERLINE OF PROPOSED SHOOFLY TRACK UNLESS OTHERWISE NOTED.
2. SEE SHEET T-8 FOR CURVE 3 DATA.

ASBUILT

BID NO. 7185

COMPLETION DATE 03/25/2016

R.E. NAME DAVID HATCH

40' 0' 40' 80'

SCALE: 1"=40'

UPRR BRIDGE 55.54 LOS ANGELES SUB

DIGALERT
DIAL TOLL FREE
1-800-422-4133
AT LEAST TWO DAYS BEFORE YOU DIG
UNDERGROUND SERVICE ALERT OF SOUTHERN CALIFORNIA

MOFFATT & NICHOL
3780 KILROY AIRPORT WAY, SUITE 600
LONG BEACH, CALIFORNIA, 90806
562-426-9551

DATE

REGISTERED PROFESSIONAL ENGINEER
M.S. NICHOL
NO. C60129
EXP. 06/30/14
CIVIL
STATE OF CALIFORNIA

MARK	REVISIONS	APPR.	DATE

DESIGNED BY JAT DRAWN BY BAH CHECKED BY CWH

CITY OF RIVERSIDE, CALIFORNIA
PUBLIC WORKS DEPARTMENT

RIVERSIDE AVE UNDERPASS

SHOOFLY TRACK – PLAN & PROFILE T-9

HORIZ. SCALE: AS SHOWN VERT. SCALE: AS SHOWN

ACCT. NO. –
W.O. NO. –

R-4240

SHEET 23 OF 146

FILE NO.

DRAWING NAME: \\netapp1b02\ib_projects\18318 ib13\CAD\Sheet\RAILROAD\635011009.dwg
PLOT DATE: Sep 27, 2016 - 9:21am PLOTTED BY: dleigh

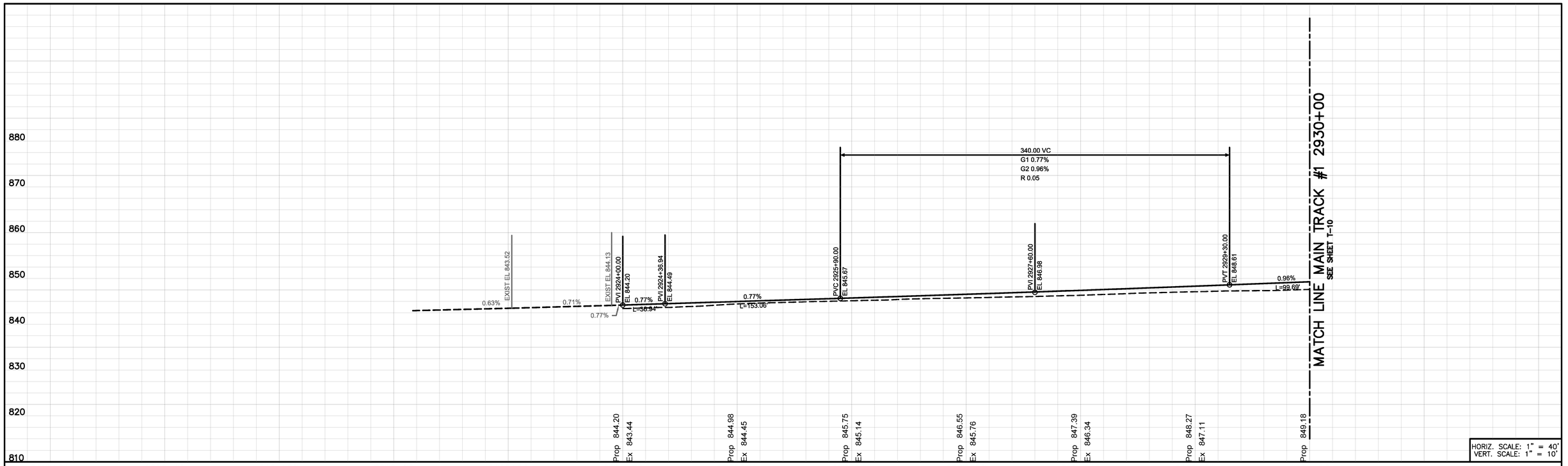

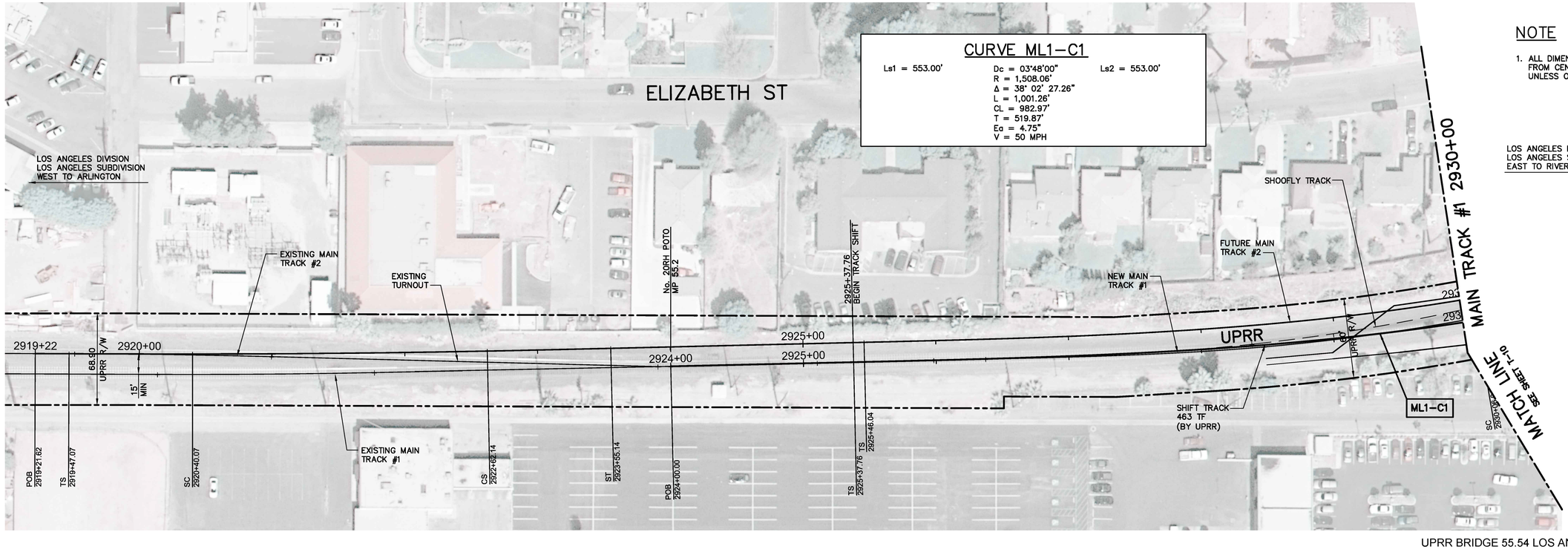

NOTE

1. ALL DIMENSIONS, STATIONS AND OFFSETS ARE FROM CENTERLINE OF PROPOSED MAIN TRACK #1 UNLESS OTHERWISE NOTED.

ASBUILT

BID NO. 7185

COMPLETION DATE 03/25/2016

R.E. NAME DAVID HATCH

UPRR BRIDGE 55.54 LOS ANGELES SUB

DIGALERT
DIAL TOLL FREE
1-800-422-4133
AT LEAST TWO DAYS BEFORE YOU DIG
UNDERGROUND SERVICE ALERT OF SOUTHERN CALIFORNIA

MOFFATT & NICHOL
3780 KILROY AIRPORT WAY, SUITE 600
LONG BEACH, CALIFORNIA, 90806
562-426-9551

DATE _____

REGISTERED PROFESSIONAL ENGINEER
M.S. NICHOL
NO. C60129
EXP. 06/30/14
CIVIL
STATE OF CALIFORNIA

MARK	REVISIONS	APPR.	DATE

DESIGNED BY JAH DRAWN BY BAH CHECKED BY CWH

CITY OF RIVERSIDE, CALIFORNIA
PUBLIC WORKS DEPARTMENT

RIVERSIDE AVE UNDERPASS

MAIN TRACK #1 – PLAN & PROFILE T-10

HORIZ. SCALE: AS SHOWN VERT. SCALE: AS SHOWN

ACCT. NO. –
W.O. NO. –

R-4240

SHEET 24 OF 146

FILE NO.

DRAWING NAME: \\netapp102\ib_projects\8318 ib13\CADD\Sheet\RAILROAD\635501010.dwg
PLOT DATE: Sep 27, 2016 - 8:23am PLOTTED BY: dleigh

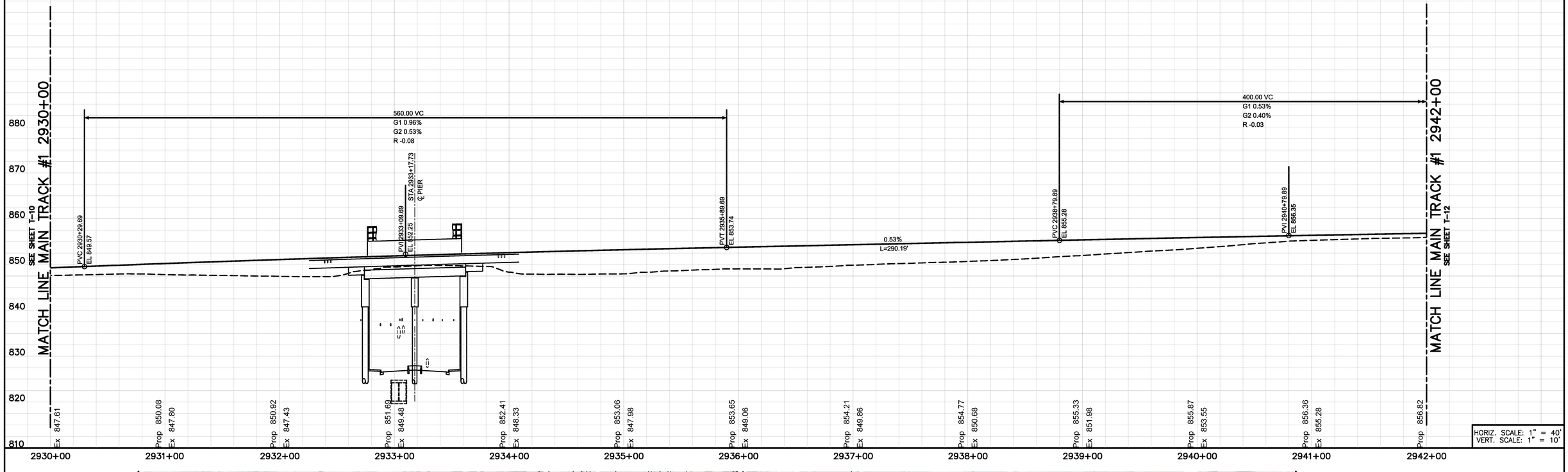

CURVE ML1–C1

Ls1 = 553.00'

Dc = 03°48'00"
R = 1,508.06'
Δ = 38° 02' 27.26"
L = 1,001.26'
CL = 982.97'
T = 519.87'
Ea = 4.75"
V = 50 MPH

Ls2 = 553.00'

NOTES

1. ALL DIMENSIONS, STATIONS AND OFFSETS ARE FROM CENTERLINE OF PROPOSED MAIN TRACK #1 UNLESS OTHERWISE NOTED.
2. DIMENSIONS TO RETAINING WALLS ARE TO NEAR INSIDE FACE.

LOS ANGELES DIVISION
LOS ANGELES SUBDIVISION
EAST TO RIVERSIDE

ASBUILT

BID NO. 7185

COMPLETION DATE 03/25/2016

R.E. NAME DAVID HATCH

UPRR BRIDGE 55.54 LOS ANGELES SUB

DIGALERT
DIAL TOLL FREE
1-800-422-4133
AT LEAST TWO DAYS BEFORE YOU DIG
UNDERGROUND SERVICE ALERT OF SOUTHERN CALIFORNIA

MOFFATT & NICHOL
3780 KILROY AIRPORT WAY, SUITE 600
LONG BEACH, CALIFORNIA, 90806
562-426-9551

DATE _____

REGISTERED PROFESSIONAL ENGINEER
M.S. NICHOL
NO. C60129
EXP. 06/30/14
CIVIL
STATE OF CALIFORNIA

MARK	REVISIONS	APPR.	DATE

DESIGNED BY JAT DRAWN BY BAH CHECKED BY CWH

CITY OF RIVERSIDE, CALIFORNIA
PUBLIC WORKS DEPARTMENT

RIVERSIDE AVE UNDERPASS

MAIN TRACK #1 – PLAN & PROFILE T–11

HORIZ. SCALE: AS SHOWN VERT. SCALE: AS SHOWN

ACCT. NO. –
W.O. NO. –

R–4240

SHEET 25 OF 146

FILE NO.

DRAWING NAME: \\netapp1b02\ib_projects\18318 ib12\CADD\Sheet\RAILROAD\635501T011.dwg
PLOT DATE: Sep 27, 2016 8:21 am PLOTTED BY: dleigh

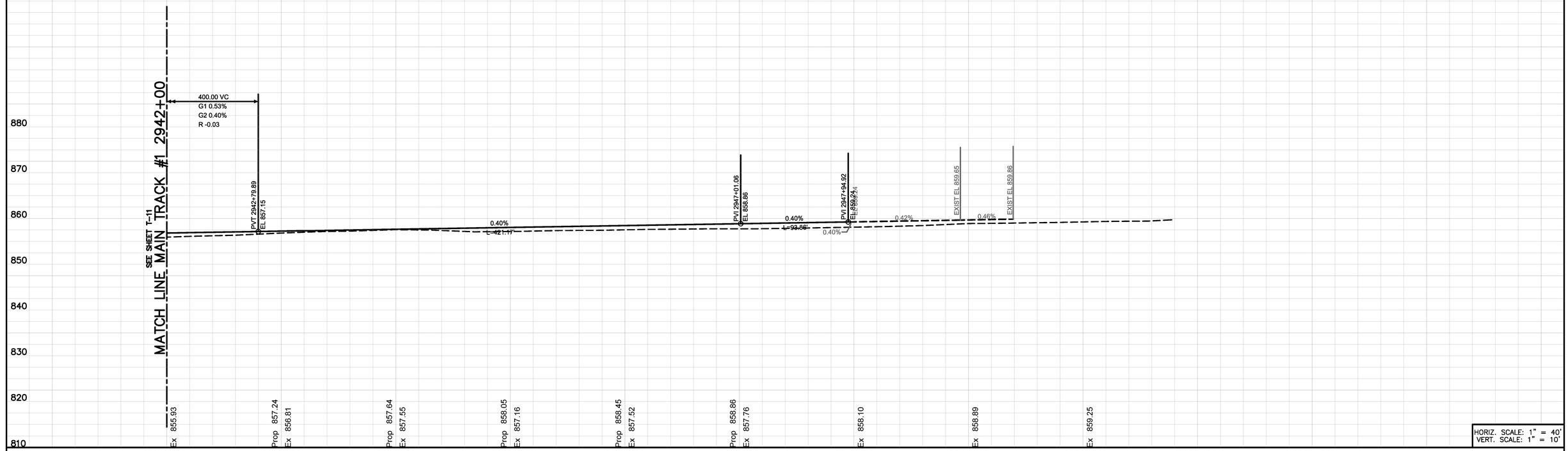

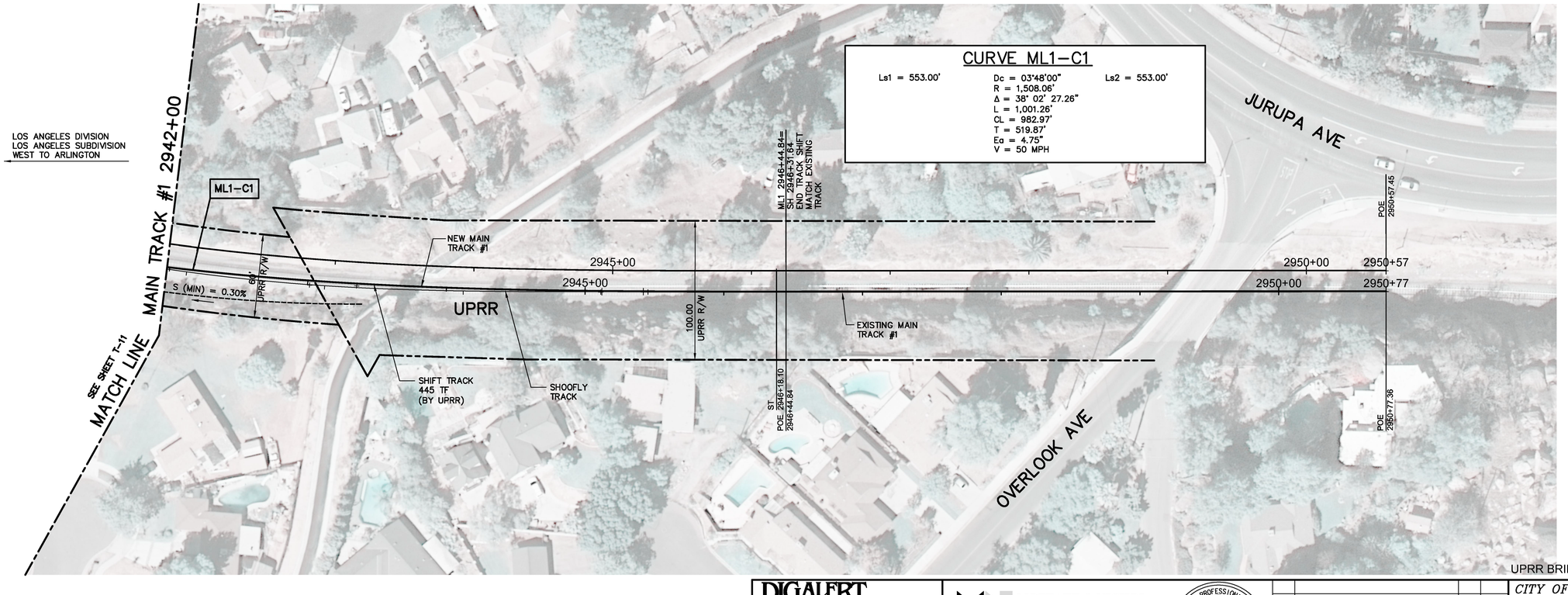

CURVE ML1–C1

Ls1 = 553.00'

Dc = 03°48'00"
R = 1,508.06'
Δ = 38° 02' 27.26"
L = 1,001.26'
CL = 982.97'
T = 519.87'
Eq = 4.75"
V = 50 MPH

Ls2 = 553.00'

NOTE

1. ALL DIMENSIONS, STATIONS AND OFFSETS ARE FROM CENTERLINE OF PROPOSED MAIN TRACK #1 UNLESS OTHERWISE NOTED.
2. SEE SHEET T–11 FOR CURVE 1 DATA.

LOS ANGELES DIVISION
LOS ANGELES SUBDIVISION
EAST TO RIVERSIDE

ASBUILT

BID NO. 7185

COMPLETION DATE 03/25/2016

R.E. NAME DAVID HATCH

40' 0' 40' 80'

SCALE: 1"=40'

UPRR BRIDGE 55.54 LOS ANGELES SUB

DIGALERT
DIAL TOLL FREE
1-800-422-4133
AT LEAST TWO DAYS BEFORE YOU DIG
UNDERGROUND SERVICE ALERT OF SOUTHERN CALIFORNIA

MOFFATT & NICHOL
3780 KILROY AIRPORT WAY, SUITE 600
LONG BEACH, CALIFORNIA, 90806
562-426-9551

DATE

REGISTERED PROFESSIONAL ENGINEER
M.S. NICHOL
NO. C60129
EXP. 06/30/14
CIVIL
STATE OF CALIFORNIA

MARK	REVISIONS	APPR.	DATE

DESIGNED BY JAH DRAWN BY BAH CHECKED BY CWH

CITY OF RIVERSIDE, CALIFORNIA
PUBLIC WORKS DEPARTMENT

RIVERSIDE AVE UNDERPASS

MAIN TRACK #1 – PLAN & PROFILE T–12

HORIZ. SCALE: AS SHOWN VERT. SCALE: AS SHOWN

ACCT. NO. –
W.O. NO. –

R–4240

SHEET 26 OF 146

FILE NO.

DRAWING NAME: \\netapp102\ib_projects\8318 ib12\CADD\Sheet\RAILROAD\635501102.dwg
PLOT DATE: Sep 27, 2016 PLOTTED BY: dleigh

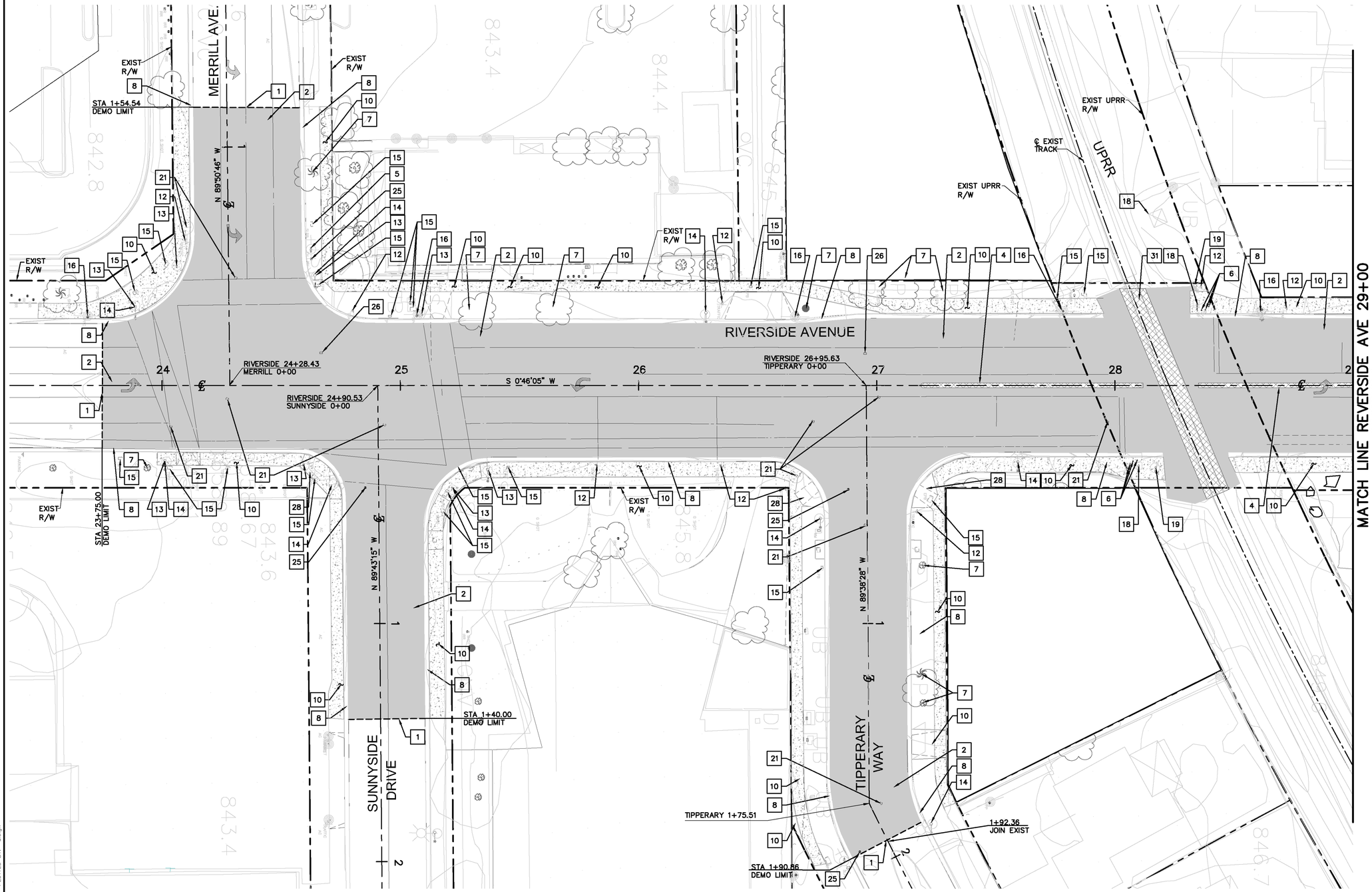

REMOVAL NOTES

1	SAWCUT EXISTING PAVEMENT
2	REMOVE EXISTING AC PAVEMENT
3	REMOVE EXISTING CONCRETE PAVEMENT
4	REMOVE EXISTING CONCRETE CENTER DIVIDER
5	RELOCATE FIRE HYDRANT (BY OTHERS)
6	REMOVE EXISTING GUARD POST
7	REMOVE TREE
8	REMOVE CURB & GUTTER
10	REMOVE EXISTING CONCRETE SIDEWALK
12	REMOVE & SALVAGE SIGN
13	REMOVE & SALVAGE EXISTING TRAFFIC SIGNAL
14	REMOVE & SALVAGE EXISTING STREET LIGHT
15	REMOVE ELECTRICAL PULL BOX
16	RELOCATE POWER POLE (BY OTHERS)
18	REMOVE RAILROAD TRAFFIC ARM & SIGNAL (BY OTHERS)
19	REMOVE POLE AND ELECTRICAL BOX (BY OTHERS)
21	REMOVE EXISTING UTILITY MANHOLE (BY OTHERS)
25	REMOVE EXISTING WATER VALVE (BY OTHERS)
26	REMOVE EXISTING WATER METER (BY OTHERS)
28	REMOVE EXISTING HANDICAP RAMP
31	REMOVE RAILROAD CONCRETE PANELS (BY UPRR)
59	REMOVE EXISTING WAYSIDE HORN AND SALVAGE TO CITY YARD

LEGEND

- AC PAVEMENT
- CONCRETE SIDEWALK
- CONCRETE PAVEMENT
- SAWCUT AC PAVEMENT

ASBUILT

BID NO. 7185
COMPLETION DATE 03/25/2016
R.E. NAME DAVID HATCH

20' 0' 20' 40'
SCALE: 1"=20'

UPRR BRIDGE 55.54 LOS ANGELES SUB

DIGALERT
DIAL TOLL FREE
1-800-422-4133
AT LEAST TWO DAYS BEFORE YOU DIG
UNDERGROUND SERVICE ALERT OF SOUTHERN CALIFORNIA

MOFFATT & NICHOL
3780 KILROY AIRPORT WAY, SUITE 600
LONG BEACH, CALIFORNIA, 90806
562-426-9551

DATE

REGISTERED PROFESSIONAL ENGINEER
M.S. NICHOL
NO. C60129
EXP. 06/30/14
CIVIL
STATE OF CALIFORNIA

MARK	REVISIONS	APPR.	DATE

DESIGNED BY RW DRAWN BY TP CHECKED BY MSN

CITY OF RIVERSIDE, CALIFORNIA
PUBLIC WORKS DEPARTMENT

RIVERSIDE AVE UNDERPASS

DEMOLITION PLAN DP-1

HORIZ. SCALE: AS SHOWN VERT. SCALE: AS SHOWN

ACCT. NO. -
W.O. NO. -

R-4240

SHEET 27 OF 146

FILE NO.

DRAWING NAME: \\netapplib02\lb_projects\8318 lb13\CADD\Sheet\DEMOLITION\635010P001.dwg
PLOT DATE: Sep 27, 2016 - 9:21am PLOTTED BY: dleigh

REMOVAL NOTES

1	SAWCUT EXISTING PAVEMENT
2	REMOVE EXISTING AC PAVEMENT
3	REMOVE EXISTING CONCRETE PAVEMENT
4	REMOVE EXISTING CONCRETE CENTER DIVIDER
5	RELOCATE FIRE HYDRANT (BY OTHERS)
6	REMOVE EXISTING GUARD POST
7	REMOVE TREE
8	REMOVE CURB & GUTTER
10	REMOVE EXISTING CONCRETE SIDEWALK
12	REMOVE & SALVAGE SIGN
14	REMOVE & SALVAGE EXISTING STREET LIGHT
15	REMOVE ELECTRICAL PULL BOX
21	REMOVE EXISTING UTILITY MANHOLE (BY OTHERS)
25	REMOVE EXISTING WATER VALVE (BY OTHERS)
26	REMOVE EXISTING WATER METER (BY OTHERS)
27	REMOVE EXISTING GAS VALVE (BY OTHERS)
29	REMOVE EXISTING YARD LIGHTS
30	PROTECT IN PLACE EXISTING TREE

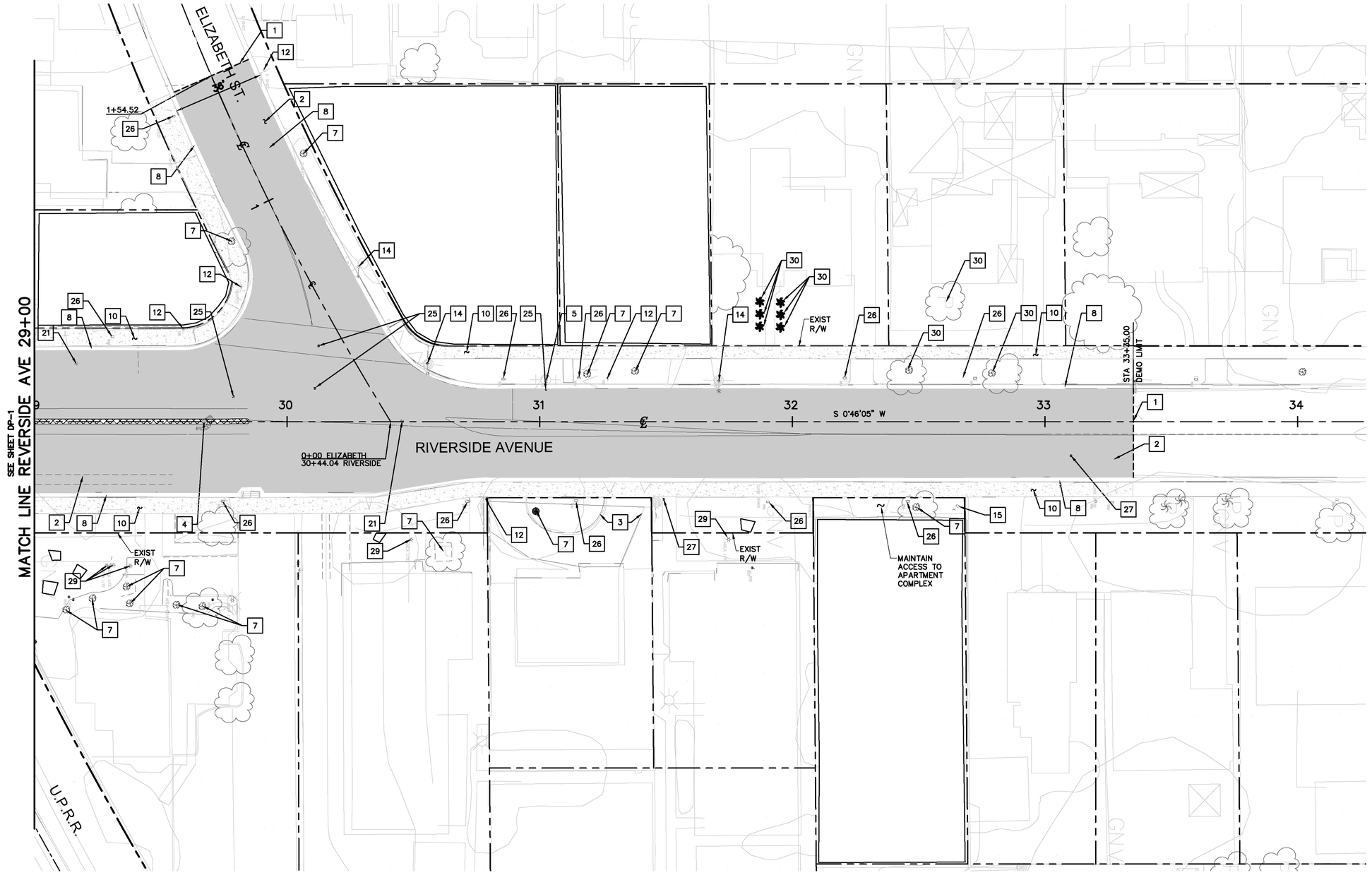

LEGEND

- AC PAVEMENT
- CONCRETE SIDEWALK
- CONCRETE PAVEMENT
- SAWCUT AC PAVEMENT

ASBUILT

BID NO. 7185

COMPLETION DATE 03/25/2016

R.E. NAME DAVID HATCH

40' 0' 40' 80'

SCALE: 1"=40'

UPRR BRIDGE 55.54 LOS ANGELES SUB

DIGALERT — DIAL TOLL FREE 1-800-422-4133 — AT LEAST TWO DAYS BEFORE YOU DIG — UNDERGROUND SERVICE ALERT OF SOUTHERN CALIFORNIA

MOFFATT & NICHOL
3780 KILROY AIRPORT WAY, SUITE 600
LONG BEACH, CALIFORNIA, 90806
562-426-9551

DATE

REGISTERED PROFESSIONAL ENGINEER — M.S. NICHOL — NO. C60129 — EXP. 06/30/14 — CIVIL — STATE OF CALIFORNIA

MARK	REVISIONS	APPR.	DATE

DESIGNED BY RW DRAWN BY TP CHECKED BY MSN

CITY OF RIVERSIDE, CALIFORNIA
PUBLIC WORKS DEPARTMENT

RIVERSIDE AVE UNDERPASS

DEMOLITION PLAN DP-2

HORIZ. SCALE: AS SHOWN VERT. SCALE: AS SHOWN

ACCT. NO. –
W.O. NO. –

R-4240

SHEET 28 OF 146

FILE NO.

DRAWING NAME: \\netapp1b02\lb_projects\8318 (b13)\CADD\Sheet\DEMOLITION\635501DP002.dwg
PLOT DATE: Sep 27, 2016 - 9:22am PLOTTED BY: dleigh

REMOVAL NOTES

1	SAWCUT EXISTING PAVEMENT
2	REMOVE EXISTING AC PAVEMENT
8	REMOVE CURB & GUTTER
10	REMOVE EXISTING CONCRETE SIDEWALK
14	REMOVE & SALVAGE EXISTING STREET LIGHT
15	REMOVE ELECTRICAL PULL BOX
26	REMOVE EXISTING WATER METER

LEGEND

CONCRETE SIDEWALK

AC PAVEMENT

SAWCUT AC PAVEMENT

ASBUILT

BID NO. 7185

COMPLETION DATE 03/25/2016

R.E. NAME DAVID HATCH

20' 0' 20' 40'

SCALE: 1"=20'

DRAWING NAME: \\netapp1b02\lb_projects\6318 lb13\CADD\Sheet\DEMOLITION\6355010P003.dwg
PLOT DATE: Sep 27, 2016 - 9:22am PLOTTED BY: dleigh

DIGALERT
DIAL TOLL FREE
1-800-422-4133
AT LEAST TWO DAYS BEFORE YOU DIG
UNDERGROUND SERVICE ALERT OF SOUTHERN CALIFORNIA

MOFFATT & NICHOL
3780 KILROY AIRPORT WAY, SUITE 600
LONG BEACH, CALIFORNIA, 90806
562-426-9551

DATE

REGISTERED PROFESSIONAL ENGINEER
M.S. NICHOL
NO. C60129
EXP. 06/30/14
CIVIL
STATE OF CALIFORNIA

MARK	REVISIONS	APPR.	DATE

DESIGNED BY RW DRAWN BY TP CHECKED BY MSN

UPRR BRIDGE 55.54 LOS ANGELES SUB

CITY OF RIVERSIDE, CALIFORNIA
PUBLIC WORKS DEPARTMENT

RIVERSIDE AVE UNDERPASS

DEMOLITION PLAN DP-3

HORIZ. SCALE: AS SHOWN VERT. SCALE: AS SHOWN

ACCT. NO. -
W.O. NO. -

R-4240

SHEET 29 OF 146

FILE NO.

CONSTRUCTION NOTES

1. CONSTRUCT 0.4' HOT MIX ASPHALT (TYPE A) OVER 1' CLASS 2 AGGREGATE BASE.
2. COLD MILL EXISTING 0.4' AC PAVEMENT AND PLACE 0.4' OVERLAY.
5. CONSTRUCT TYPE I – 6" CURB AND GUTTER PER CITY OF RIVERSIDE STD PLAN NO. 200
6. CONSTRUCT TYPE II–8" MEDIAN CURB PER CITY OF RIVERSIDE STD PLAN NO. 200
7. CONSTRUCT 3.5"PCC SIDEWALK PER CITY OF RIVERSIDE STD PLAN NO. 325
8. CONSTRUCT TYPE I PCC WHEELCHAIR RAMP PER CITY OF RIVERSIDE STD PLAN NO. 304
9. CONSTRUCT TYPE II PCC WHEELCHAIR RAMP PER CITY OF RIVERSIDE STD. PLAN NO. 304 AND DETAIL ON CONSTRUCTION DETAIL SHEET
11. CONSTRUCT TYPE II–A PCC WHEELCHAIR RAMP PER CITY OF RIVERSIDE STD. PLAN NO. 304
13. CONSTRUCT TOP–DOWN CIDH RETAINING WALL, SEE STRUCTURAL PLAN FOR DETAIL.
14. CONSTRUCT CROSS GUTTER PER CITY OF RIVERSIDE STD PLAN NO. 220
15. CONSTRUCT NEW CHAIN LINK FENCE PER CITY OF RIVERSIDE STD PLAN NO. 380
17. CONSTRUCT MASONRY PILASTER WITH IRON FENCE TO MATCH THE EXISTING FENCE.

CURVE DATA

⬡	Δ	R (FT)	L (FT)	T (FT)
1	90°36'51"	35.00	55.35	35.38
2	89°23'09"	27.00	42.12	26.71
3	89°30'40"	27.00	42.18	26.77
4	90°29'20"	27.00	42.64	27.23
5	237°38'47"	36.00	149.31	65.42
6	84°29'20"	40.00	58.98	36.33
7	26°03'56"	86.00	39.12	19.91
8	34°54'55"	100.00	60.94	31.45

ASBUILT

BID NO. 7185

COMPLETION DATE 03/25/2016

R.E. NAME DAVID HATCH

20' 0' 20' 40'

SCALE: 1"=20'

UPRR BRIDGE 55.54 LOS ANGELES SUB

DIGALERT — DIAL TOLL FREE 1-800-422-4133 AT LEAST TWO DAYS BEFORE YOU DIG — UNDERGROUND SERVICE ALERT OF SOUTHERN CALIFORNIA

MOFFATT & NICHOL
3780 KILROY AIRPORT WAY, SUITE 600
LONG BEACH, CALIFORNIA, 90806
562-426-9551

DATE _____

REGISTERED PROFESSIONAL ENGINEER — M.S. NICHOL — NO. C60129 — EXP. 06/30/14 — CIVIL — STATE OF CALIFORNIA

MARK	REVISIONS	APPR.	DATE

DESIGNED BY RW DRAWN BY TP CHECKED BY MSN

CITY OF RIVERSIDE, CALIFORNIA
PUBLIC WORKS DEPARTMENT

RIVERSIDE AVE UNDERPASS

ROADWAY LAYOUT L–1

HORIZ. SCALE: AS SHOWN VERT. SCALE: AS SHOWN

ACCT. NO. –
W.O. NO. –

R–4240

SHEET 30 OF 146

FILE NO.

DRAWING NAME: \\netapp102\ib_projects\8318 ib13\CADD\Sheet\ROADWAY\635011L001.dwg
PLOT DATE: Sep 27, 2016 - 9:22am PLOTTED BY: dhegh

CONSTRUCTION NOTES

(1) CONSTRUCT 0.4' HOT MIX ASPHALT (TYPE A) OVER 1' CLASS 2 AGGREGATE BASE.

(1A) CONSTRUCT 0.4' HOT MIX ASPHALT (TYPE A) OVER COMPACTED NATIVE SOIL

(2) COLD MILL EXISTING 0.4' AC PAVEMENT AND PLACE 0.4' OVERLAY.

(3) CONSTRUCT PCC DRIVEWAY APPROACH PER CITY OF RIVERSIDE STD. PLAN NO. 302 TYPE CURB-1

(4) CONSTRUCT PCC DRIVEWAY APPROACH PER CITY OF RIVERSIDE STD PLAN NO. 302, TYPE PL-1.

(5) CONSTRUCT TYPE I - 6" CURB AND GUTTER PER CITY OF RIVERSIDE STD PLAN NO. 200

(6) CONSTRUCT TYPE II - 8" MEDIAN CURB PER CITY OF RIVERSIDE STD PLAN NO. 200

(6A) CONSTRUCT MODIFIED TYPE II CURB (6" FACE) PER CITY OF RIVERSIDE STD PLAN NO. 200

(7) CONSTRUCT 3.5" PCC SIDEWALK PER CITY OF RIVERSIDE STD PLAN NO. 325

(9) CONSTRUCT TYPE II PCC WHEELCHAIR RAMP PER CITY OF RIVERSIDE STD PLAN NO. 304

(12) CONSTRUCT C.I.P. RETAINING WALL. SEE STRUCTURAL PLAN FOR DETAIL.

(13) CONSTRUCT TOP-DOWN CIDH RETAINING WALL, SEE STRUCTURAL PLAN FOR DETAIL.

(14) CONSTRUCT CROSS GUTTER PER CITY OF RIVERSIDE STD PLAN NO. 220.

(15) CONSTRUCT NEW CHAIN LINK FENCE PER CITY OF RIVERSIDE STD PLAN NO. 380.

(16) CONSTRUCT LANDSCAPING AREAS, SEE DETAILS ON LANDSCAPING PLANS.

CURVE DATA

⬡	Δ	R (FT)	L (FT)	T (FT)
7	180°00'04"	2.50	7.85	--
8	8°48'55"	115.00	17.69	8.86
9	247°36'42"	36.00	155.58	--
10	58°47'47"	35.00	35.92	19.72
11	90°00'00"	5.00	7.85	5.00
12	90°00'00"	5.00	7.85	5.00
13	89°13'32"	20.00	31.15	19.73
14	90°46'28"	20.00	31.69	20.27
15	55°28'16"	10.00	9.68	5.62
16	19°28'26"	254.00	86.33	43.59
17	54°04'33"	8.00	7.55	4.08
18	54°04'33"	12.00	11.33	6.12
19	99°07'11"	5.00	8.65	5.87
20	84°10'58"	5.00	7.35	4.52
21	12°53'22"	250.00	56.24	28.24
22	82°55'40"	5.00	7.24	4.42
23	100°23'06"	5.00	8.76	6.00
24	55°28'16"	14.00	13.55	7.36

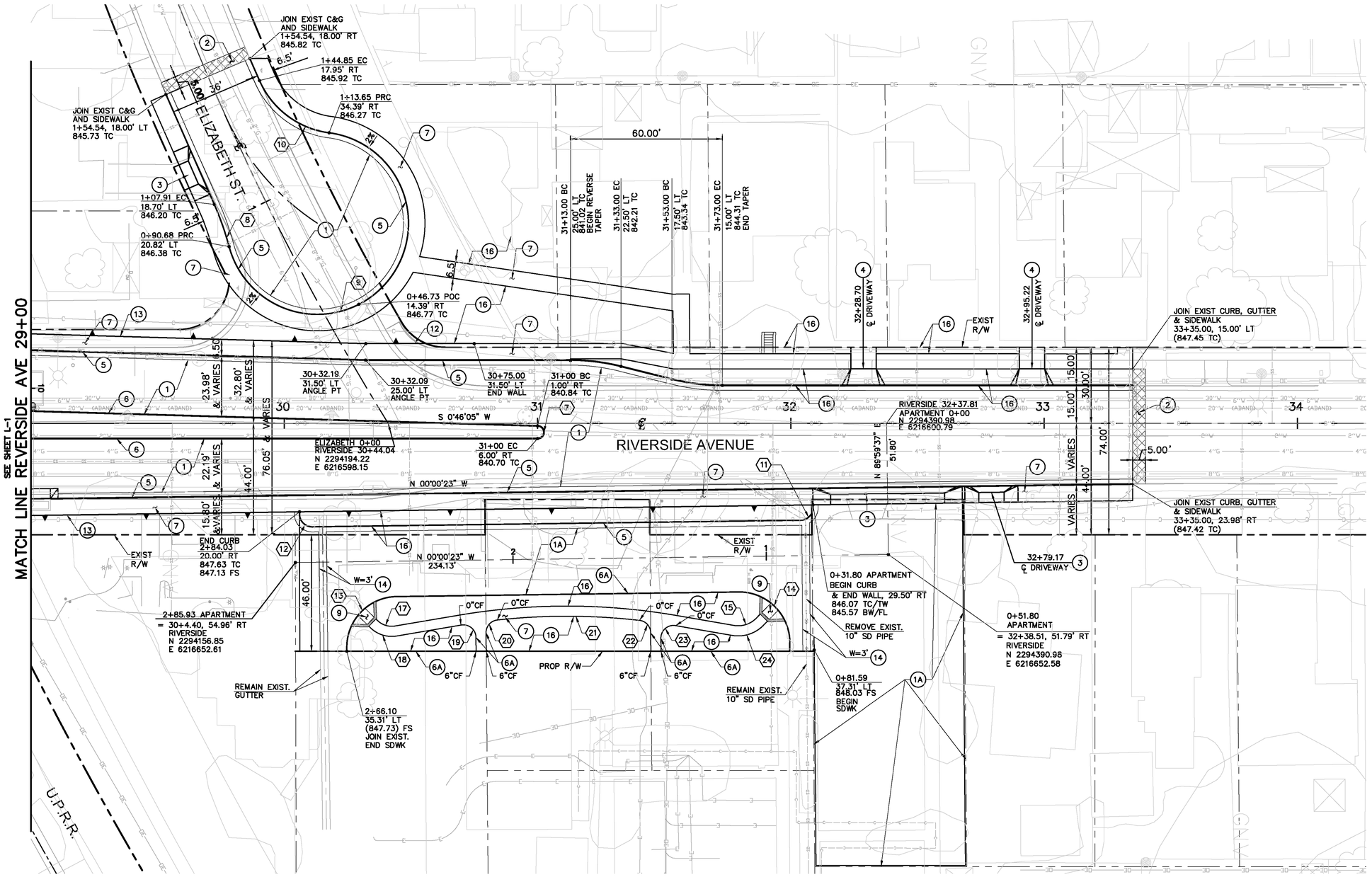

ASBUILT

BID NO. 7185

COMPLETION DATE 03/25/2016

R.E. NAME DAVID HATCH

20' 0' 20' 40'

SCALE: 1"=20'

DRAWING NAME: \\retroplb02\lb_projects\6318 lts13\CADD\Sheet\ROADWAY\635501L002.dwg
PLOT DATE: Sep 27, 2016 - 9:23am PLOTTED BY: dleigh

DIGALERT
DIAL TOLL FREE 1-800-422-4133
AT LEAST TWO DAYS BEFORE YOU DIG
UNDERGROUND SERVICE ALERT OF SOUTHERN CALIFORNIA

MOFFATT & NICHOL
3780 KILROY AIRPORT WAY, SUITE 600
LONG BEACH, CALIFORNIA, 90806
562-426-9551

REGISTERED PROFESSIONAL ENGINEER M.S. NICHOL NO. C60129 EXP. 06/30/14 CIVIL STATE OF CALIFORNIA

DATE _____

MARK	REVISIONS	APPR.	DATE
1	RFI 004 - CROSS SECTION CLAIRIFICATION	SPR	01/28/14

DESIGNED BY RW DRAWN BY TP CHECKED BY MSN

UPRR BRIDGE 55.54 LOS ANGELES SUB

CITY OF RIVERSIDE, CALIFORNIA
PUBLIC WORKS DEPARTMENT

RIVERSIDE AVE UNDERPASS

ROADWAY LAYOUT L-2

HORIZ. SCALE: AS SHOWN VERT. SCALE: AS SHOWN

ACCT. NO. -
W.O. NO. -

R-4240

SHEET 31 OF 146

FILE NO.

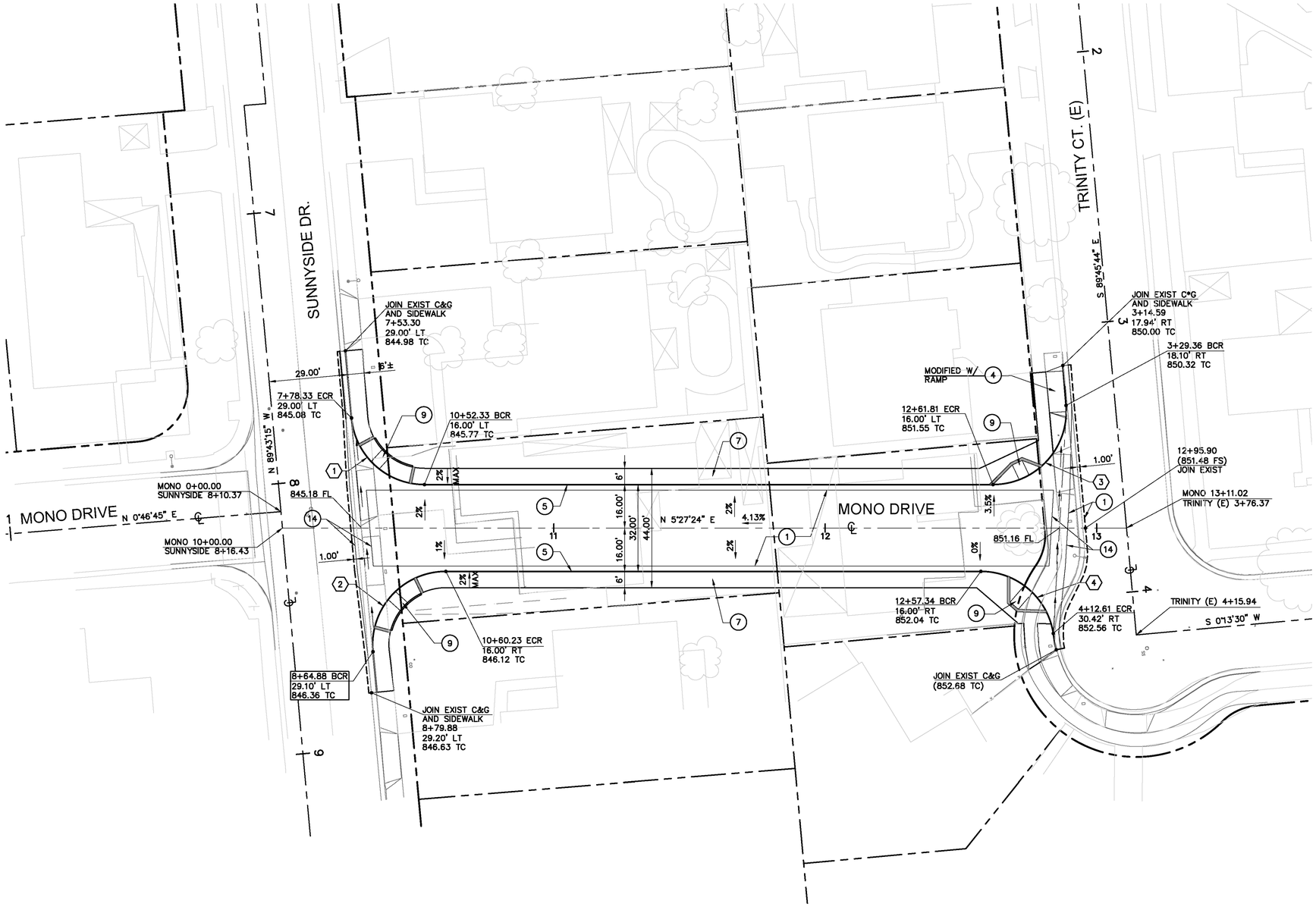

CONSTRUCTION NOTES

1. CONSTRUCT 0.45' AC OVER 0.80' CRUSHED AGGREGATE BASE OVER 1.10' SUBBASE
4. CONSTRUCT PCC RESIDENTIAL DRIVEWAY APPROACH PER CITY OF RIVERSIDE STD PLAN NO. 302, TYPE II
5. CONSTRUCT TYPE I – 6" CURB AND GUTTER PER CITY OF RIVERSIDE STD PLAN NO. 200
7. CONSTRUCT 3.5" PCC SIDEWALK PER CITY OF RIVERSIDE STD PLAN NO. 325
9. CONSTRUCT WHEELCHAIR RAMP PER CITY OF RIVERSIDE STD PLAN NO. 304, TYPE II
14. CONSTRUCT CROSS GUTTER PER CITY OF RIVERSIDE STD PLAN NO. 220

CURVE DATA

	Δ	R (FT)	L (FT)	T (FT)
1	84°49'20"	27.00	39.97	24.66
2	95°34'05"	27.00	45.04	29.76
3	94°36'55"	27.00	44.59	29.27
4	81°09'48"	27.00	38.25	23.13

ASBUILT

BID NO. 7185

COMPLETION DATE 03/25/2016

R.E. NAME DAVID HATCH

20' 0' 20' 40'

SCALE: 1"=20'

UPRR BRIDGE 55.54 LOS ANGELES SUB

DIGALERT
DIAL TOLL FREE
1-800-422-4133
AT LEAST TWO DAYS BEFORE YOU DIG
UNDERGROUND SERVICE ALERT OF SOUTHERN CALIFORNIA

MOFFATT & NICHOL
3780 KILROY AIRPORT WAY, SUITE 600
LONG BEACH, CALIFORNIA, 90806
562-426-9551

DATE

REGISTERED PROFESSIONAL ENGINEER
M.S. NICHOL
NO. C60129
EXP. 06/30/14
CIVIL
STATE OF CALIFORNIA

MARK	REVISIONS	APPR.	DATE

DESIGNED BY RW DRAWN BY TP CHECKED BY MSN

CITY OF RIVERSIDE, CALIFORNIA
PUBLIC WORKS DEPARTMENT

RIVERSIDE AVE UNDERPASS

ROADWAY LAYOUT L-3

HORIZ. SCALE: AS SHOWN VERT. SCALE: AS SHOWN

ACCT. NO. –
W.O. NO. –

R-4240

SHEET 32 OF 146

FILE NO.

DRAWING NAME: \\ntoppl02\lb_projects\8318_lb13\CADD\Sheet\ROADWAY\635501L003.dwg
PLOT DATE: Sep 27, 2016 - 9:22am PLOTTED BY: dleigh

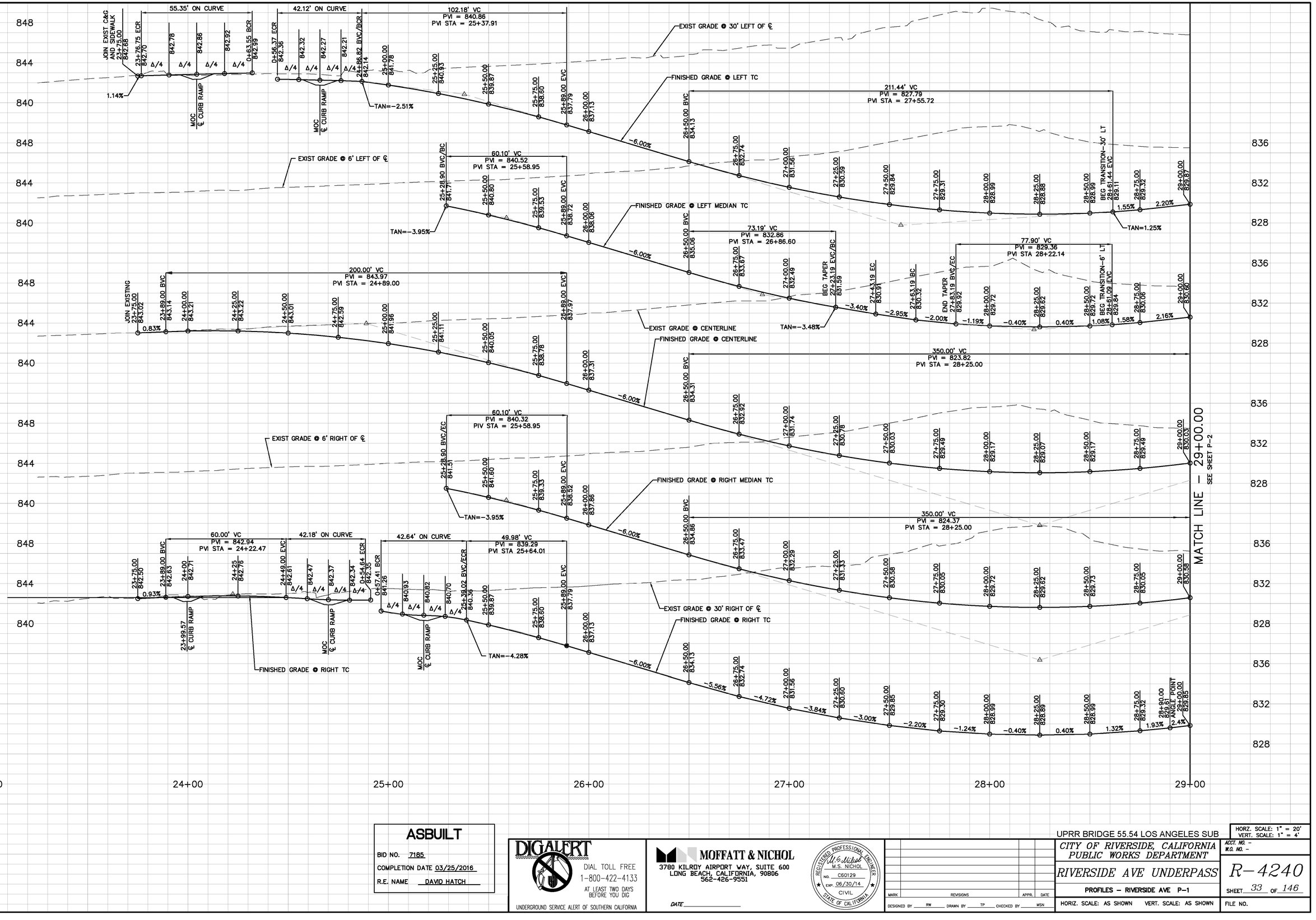

ASBUILT

BID NO. 7185

COMPLETION DATE 03/25/2016

R.E. NAME DAVID HATCH

DIGALERT
DIAL TOLL FREE
1-800-422-4133
AT LEAST TWO DAYS BEFORE YOU DIG
UNDERGROUND SERVICE ALERT OF SOUTHERN CALIFORNIA

MOFFATT & NICHOL
3780 KILROY AIRPORT WAY, SUITE 600
LONG BEACH, CALIFORNIA, 90806
562-426-9551

DATE

REGISTERED PROFESSIONAL ENGINEER
M.S. NICHOL
NO. C50129
EXP. 06/30/14
CIVIL
STATE OF CALIFORNIA

MARK	REVISIONS	APPR.	DATE

DESIGNED BY RW DRAWN BY TP CHECKED BY MSN

UPRR BRIDGE 55.54 LOS ANGELES SUB

CITY OF RIVERSIDE, CALIFORNIA
PUBLIC WORKS DEPARTMENT

RIVERSIDE AVE UNDERPASS

PROFILES – RIVERSIDE AVE P-1

HORIZ. SCALE: AS SHOWN VERT. SCALE: AS SHOWN

HORZ. SCALE: 1" = 20'
VERT. SCALE: 1" = 4'

ACCT. NO. –
W.O. NO. –

R-4240

SHEET 33 OF 146

FILE NO.

DRAWING NAME: \\netapp102\ib_projects\8318 ib13\CADD\Sheet\ROADWAY\635501P001.dwg
PLOT DATE: Sep 27, 2016 - 9:22am PLOTTED BY: dleigh

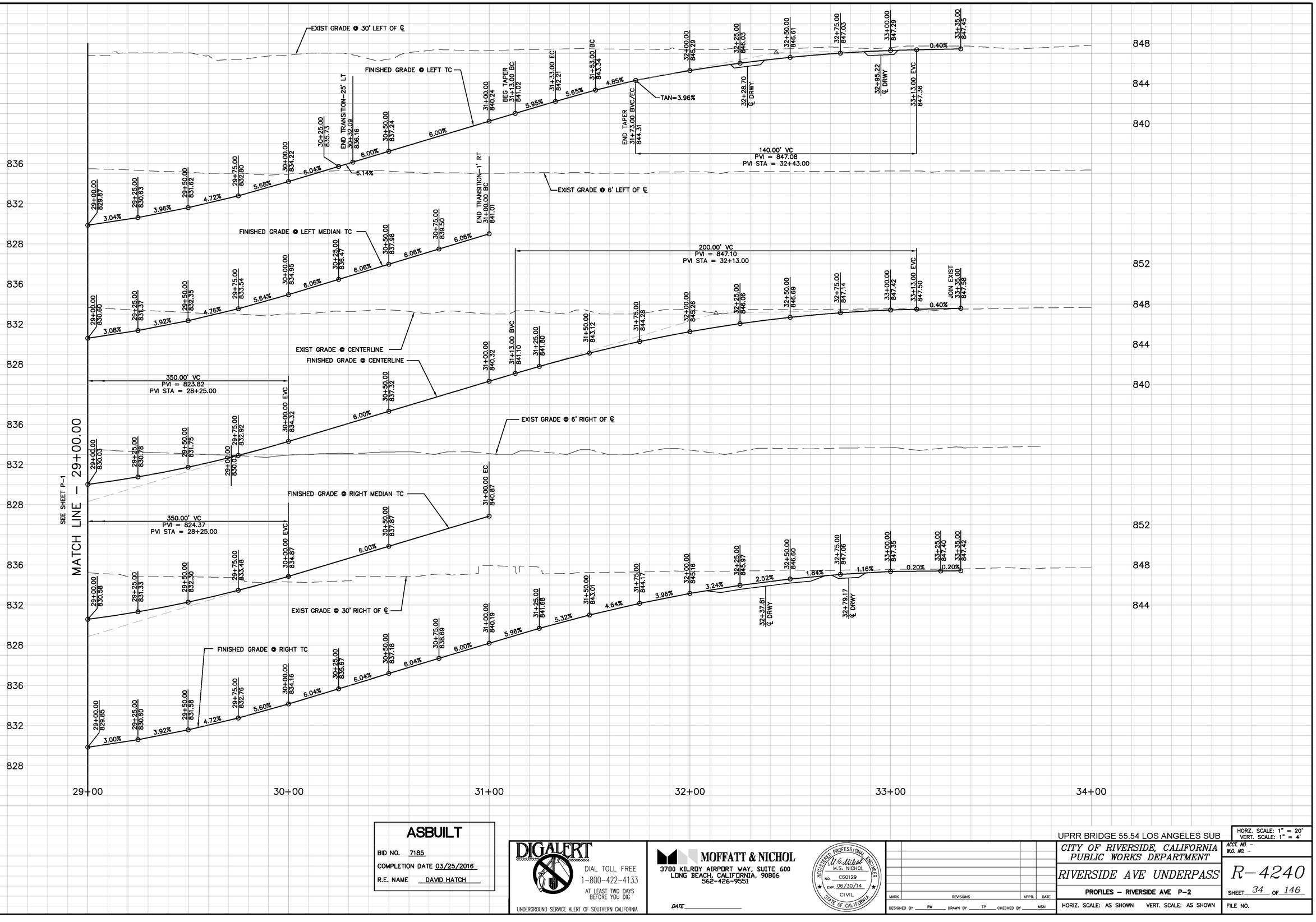

ASBUILT

BID NO. 7185

COMPLETION DATE 03/25/2016

R.E. NAME DAVID HATCH

DIGALERT
DIAL TOLL FREE
1-800-422-4133
AT LEAST TWO DAYS BEFORE YOU DIG
UNDERGROUND SERVICE ALERT OF SOUTHERN CALIFORNIA

MOFFATT & NICHOL
3780 KILROY AIRPORT WAY, SUITE 600
LONG BEACH, CALIFORNIA, 90806
562-426-9551

DATE

REGISTERED PROFESSIONAL ENGINEER
W.S. Nichol
M.S. NICHOL
NO. C60129
EXP. 06/30/14
CIVIL
STATE OF CALIFORNIA

MARK	REVISIONS	APPR.	DATE

DESIGNED BY RW DRAWN BY TP CHECKED BY MSN

UPRR BRIDGE 55.54 LOS ANGELES SUB

CITY OF RIVERSIDE, CALIFORNIA
PUBLIC WORKS DEPARTMENT

RIVERSIDE AVE UNDERPASS

PROFILES – RIVERSIDE AVE P-2

HORIZ. SCALE: AS SHOWN VERT. SCALE: AS SHOWN

HORZ. SCALE: 1" = 20'
VERT. SCALE: 1" = 4'

ACCT. NO. –
W.O. NO. –

R-4240

SHEET 34 OF 146

FILE NO.

DRAWING NAME: \\netapp1b02\lb_projects\1318 lb13\CADD\Sheet\ROADWAY\635501P002.dwg
PLOT DATE: Sep 27, 2016 - 9:22am PLOTTED BY: dleigh

MERRILL AVE

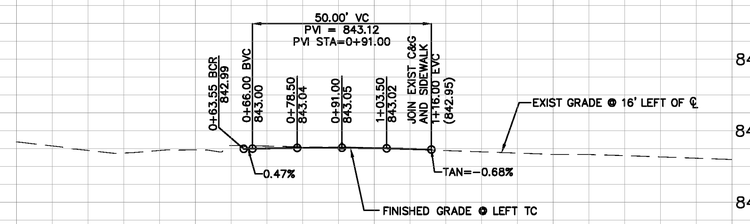

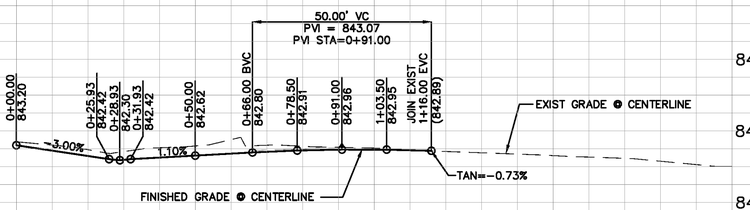

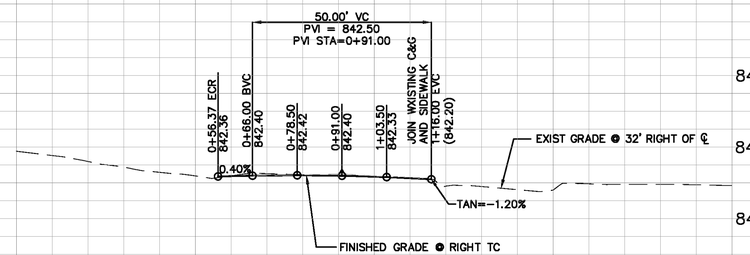

SUNNYSIDE DRIVE

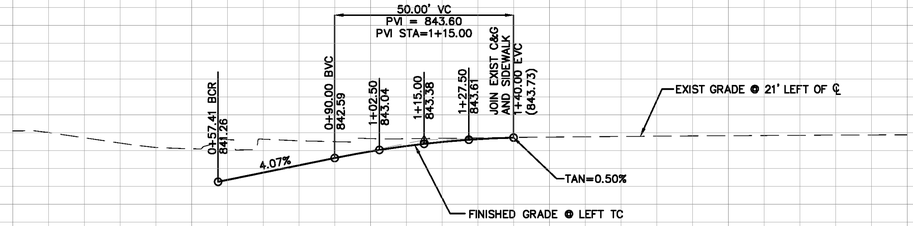

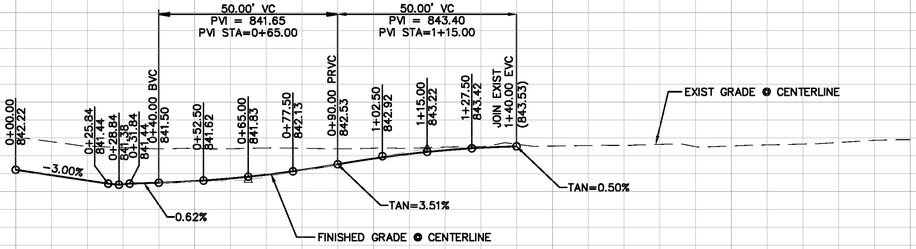

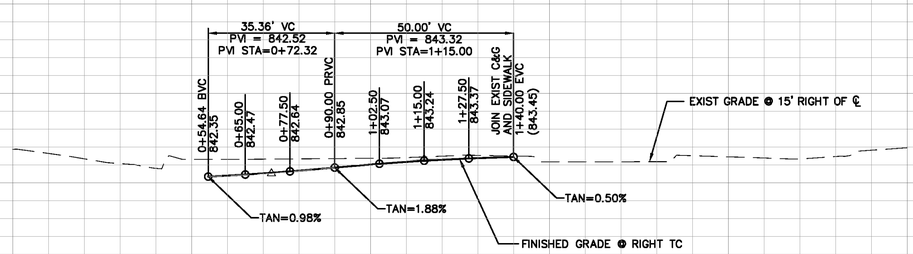

848 844 840 836

0+00 1+00 2+00 0+00 1+00 2+00

ASBUILT

BID NO. 7185

COMPLETION DATE 03/25/2016

R.E. NAME DAVID HATCH

DIGALERT
DIAL TOLL FREE
1-800-422-4133
AT LEAST TWO DAYS BEFORE YOU DIG
UNDERGROUND SERVICE ALERT OF SOUTHERN CALIFORNIA

MOFFATT & NICHOL
3780 KILROY AIRPORT WAY, SUITE 600
LONG BEACH, CALIFORNIA, 90806
562-426-9551

DATE _____

REGISTERED PROFESSIONAL ENGINEER
W. S. Nichol
M.S. NICHOL
NO. C60129
EXP. 06/30/14
CIVIL
STATE OF CALIFORNIA

MARK	REVISIONS	APPR.	DATE

DESIGNED BY RW DRAWN BY TP CHECKED BY MSN

UPRR BRIDGE 55.54 LOS ANGELES SUB

CITY OF RIVERSIDE, CALIFORNIA
PUBLIC WORKS DEPARTMENT

RIVERSIDE AVE UNDERPASS

PROFILES – MERRILL AVE & SUNNYSIDE DR P-3

HORIZ. SCALE: AS SHOWN VERT. SCALE: AS SHOWN

FILE NO.

HORZ. SCALE: 1" = 20'
VERT. SCALE: 1" = 4'

ACCT. NO. –
W.O. NO. –

R-4240

SHEET 35 OF 146

DRAWING NAME: \\retopplib02\b_projects\b318 lb13\CADD\Sheet\ROADWAY\635501P003.dwg
PLOT DATE: Sep 27, 2016 - 9:22am PLOTTED BY: dleigh

ELIZABETH STREET

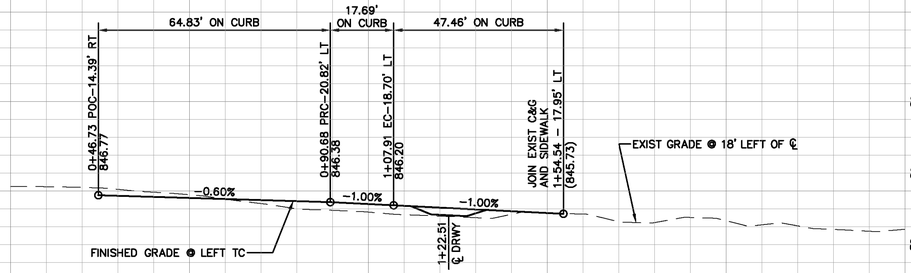

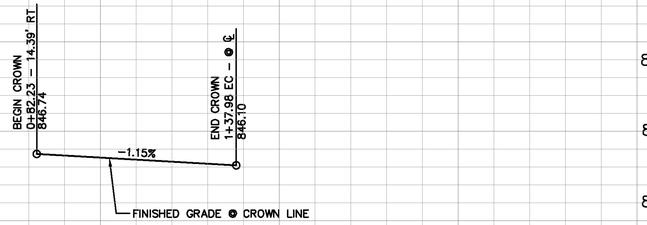

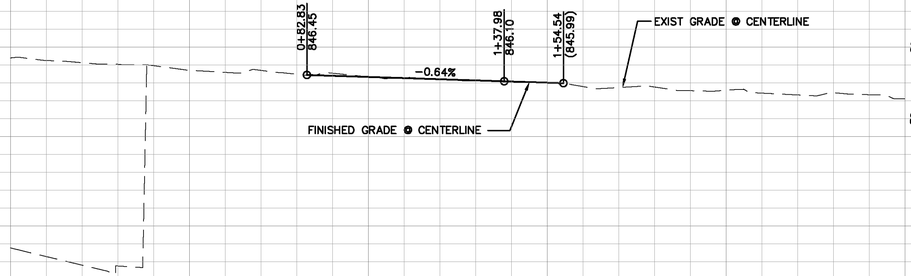

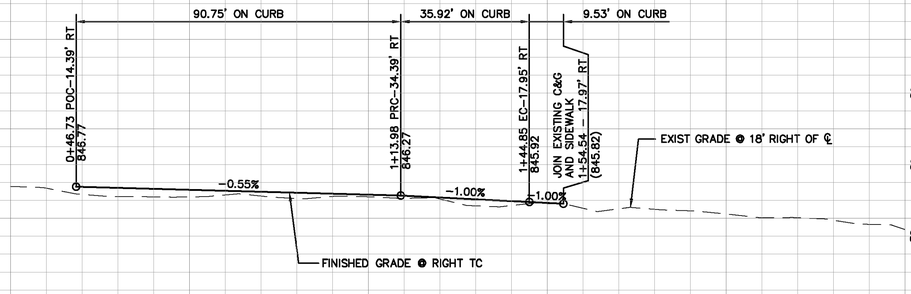

TIPPERARY WAY

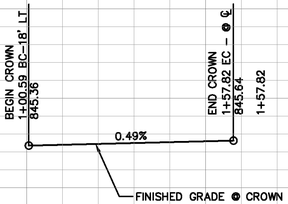

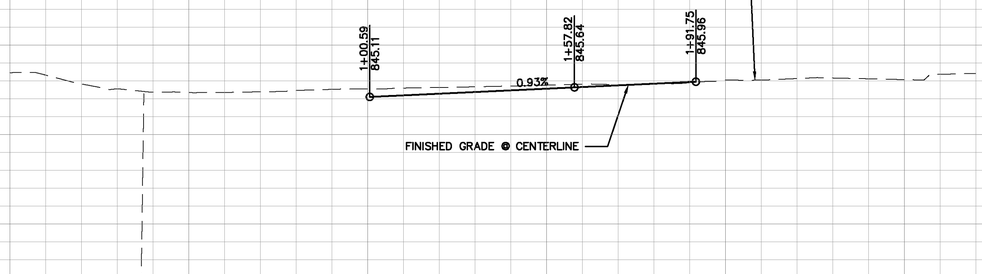

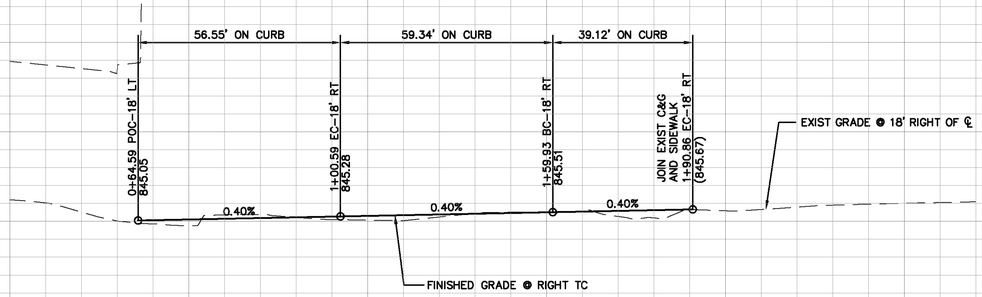

0+00 1+00 2+00 0+00 1+00 2+00

ASBUILT

BID NO. 7185

COMPLETION DATE 03/25/2016

R.E. NAME DAVID HATCH

DIGALERT
DIAL TOLL FREE
1-800-422-4133
AT LEAST TWO DAYS BEFORE YOU DIG
UNDERGROUND SERVICE ALERT OF SOUTHERN CALIFORNIA

MOFFATT & NICHOL
3780 KILROY AIRPORT WAY, SUITE 600
LONG BEACH, CALIFORNIA, 90806
562-426-9551

DATE

REGISTERED PROFESSIONAL ENGINEER
M.S. NICHOL
NO. C60129
EXP. 06/30/14
CIVIL
STATE OF CALIFORNIA

MARK	REVISIONS	APPR.	DATE

DESIGNED BY RW DRAWN BY TP CHECKED BY MSN

UPRR BRIDGE 55.54 LOS ANGELES SUB

HORZ. SCALE: 1" = 20'
VERT. SCALE: 1" = 4'

CITY OF RIVERSIDE, CALIFORNIA
PUBLIC WORKS DEPARTMENT

RIVERSIDE AVE UNDERPASS

PROFILES – ELIZABETH ST & TIPPERARY WAY P-4

HORIZ. SCALE: AS SHOWN VERT. SCALE: AS SHOWN

ACCT. NO. –
W.O. NO. –

R-4240

SHEET 36 OF 146

FILE NO.

DRAWING NAME: \\retopp1b02\b_projects\6318 lb13\CADD\Sheet\ROADWAY\635501P004.dwg
PLOT DATE: Sep 27, 2016 - 9:26am PLOTTED BY: dhigh

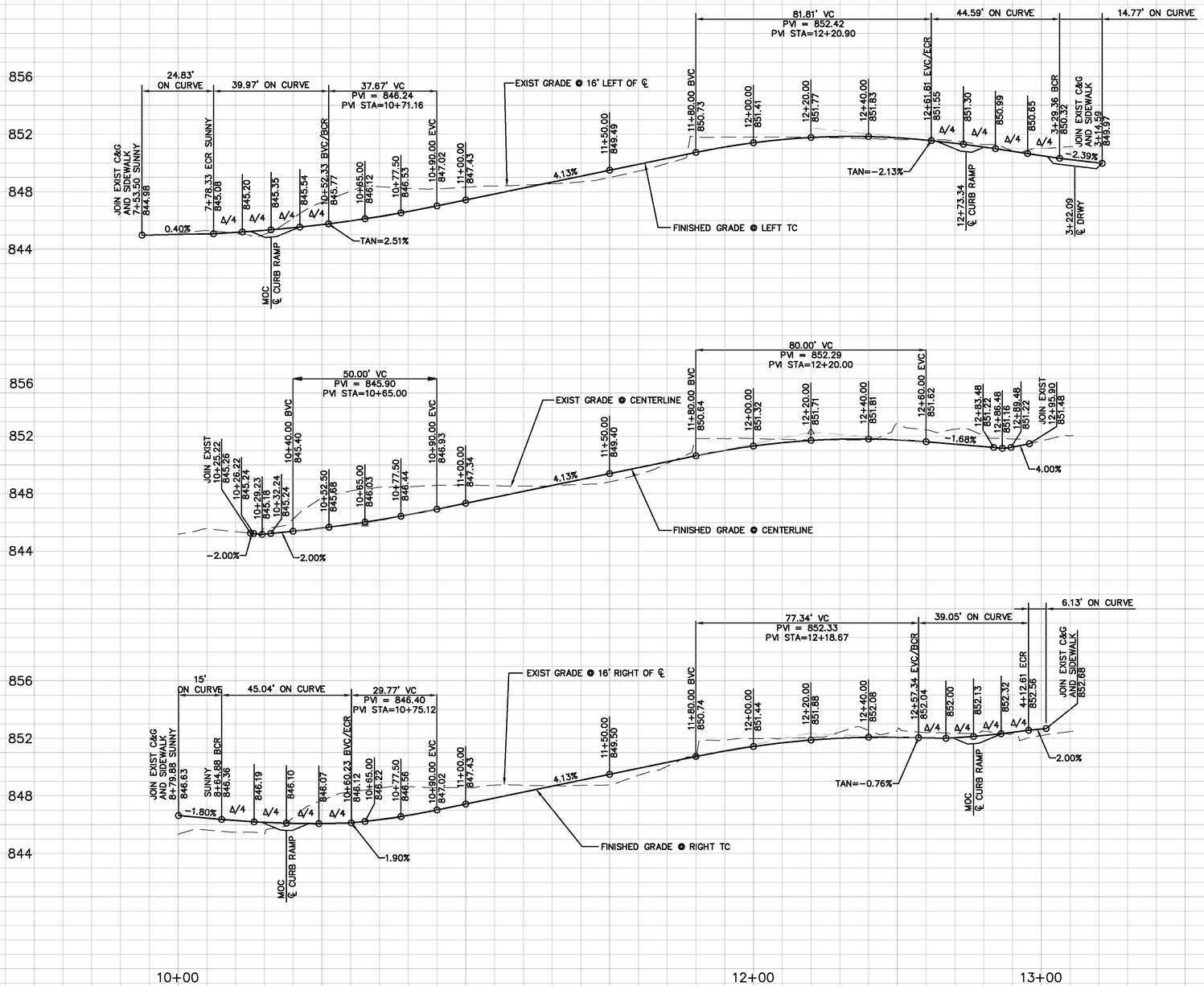

ASBUILT

BID NO. 7185

COMPLETION DATE 03/25/2016

R.E. NAME DAVID HATCH

DIGALERT
DIAL TOLL FREE
1-800-422-4133
AT LEAST TWO DAYS BEFORE YOU DIG
UNDERGROUND SERVICE ALERT OF SOUTHERN CALIFORNIA

MOFFATT & NICHOL
3780 KILROY AIRPORT WAY, SUITE 600
LONG BEACH, CALIFORNIA, 90806
562-426-9551

DATE _____

REGISTERED PROFESSIONAL ENGINEER
M.S. NICHOL
NO. C60129
EXP. 06/30/14
CIVIL
STATE OF CALIFORNIA

MARK	REVISIONS	APPR.	DATE

DESIGNED BY RW DRAWN BY TP CHECKED BY MSN

UPRR BRIDGE 55.54 LOS ANGELES SUB

HORZ. SCALE: 1" = 20'
VERT. SCALE: 1" = 4'

CITY OF RIVERSIDE, CALIFORNIA
PUBLIC WORKS DEPARTMENT

RIVERSIDE AVE UNDERPASS

PROFILES – MONO DRIVE P-5

HORIZ. SCALE: AS SHOWN VERT. SCALE: AS SHOWN

ACCT. NO. –
W.O. NO. –

R-4240

SHEET 37 OF 146

FILE NO.

DRAWING NAME: \\ntoppl02\lb_projects\6318 lb13\CADD\Sheet\ROADWAY\635501P005.dwg
PLOT DATE: Sep 27, 2016 - 9:22am PLOTTED BY: dhigh

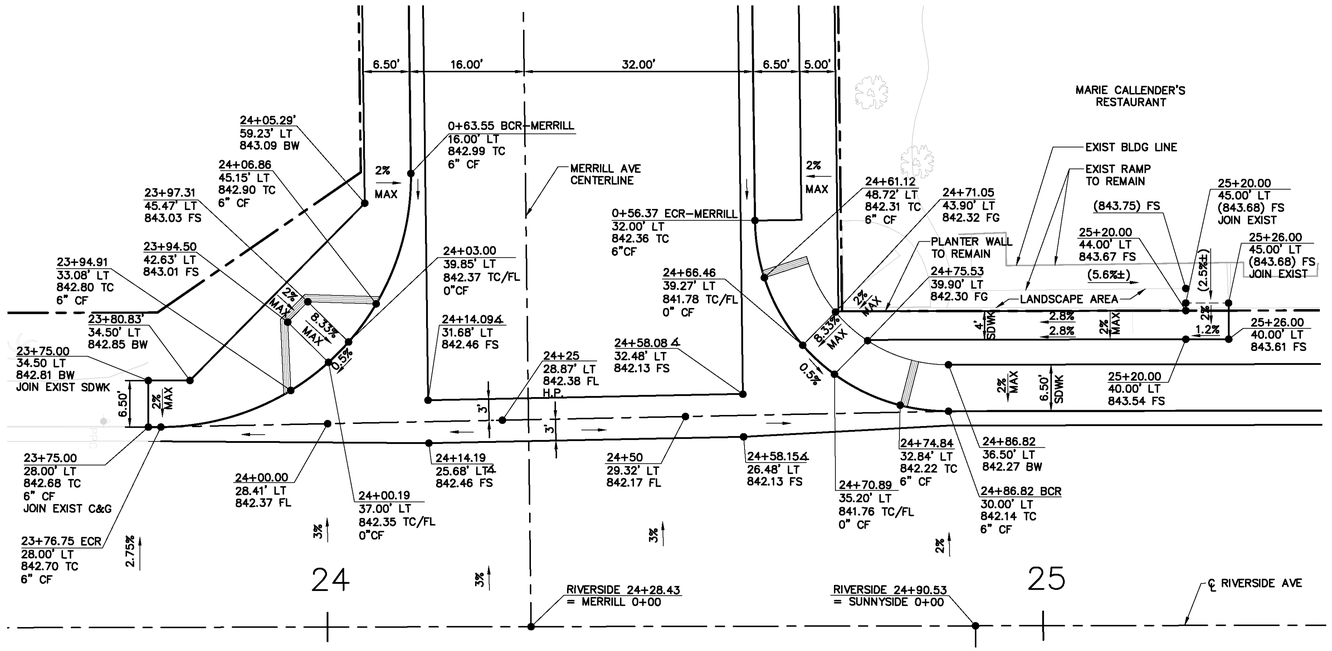

CROSS GUTTER/RAMP DETAIL

RIVERSIDE AVENUE @ MERRILL AVENUE
24+76.75 TO 24+86.82
SCALE: 1"=10'

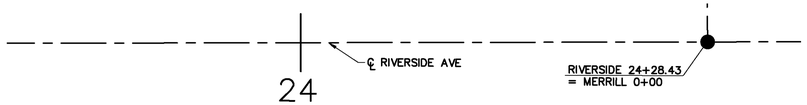

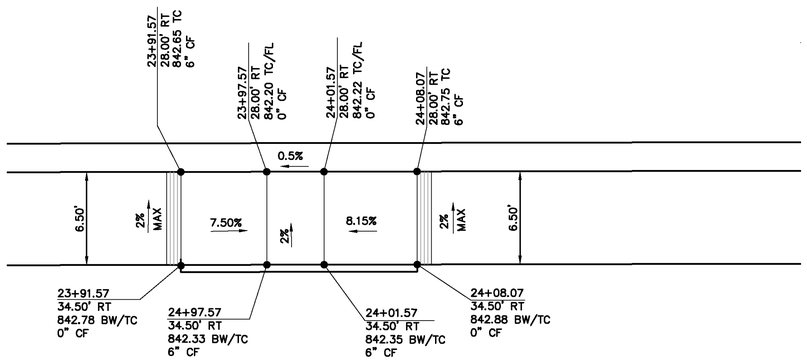

RAMP DETAIL

RIVERSIDE AVENUE
23+99.57 28.00' RT
SCALE: 1" = 5'

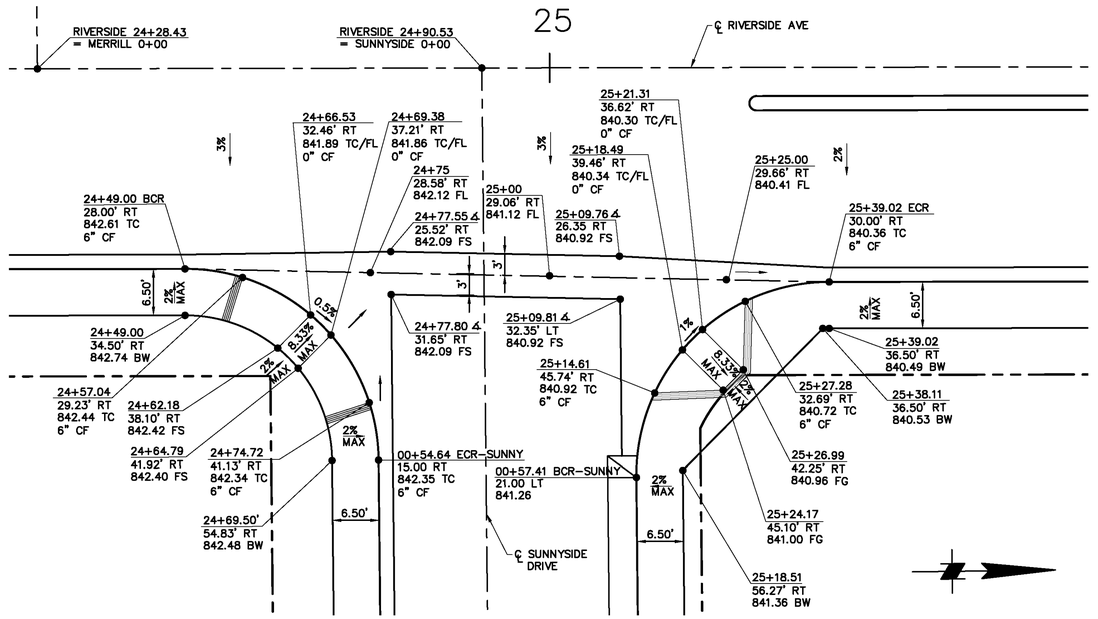

CROSS GUTTER/RAMP DETAIL

RIVERSIDE AVENUE @ SUNNYSIDE DRIVE
24+55.94 TO 24+39.02
SCALE: 1"=10'

ASBUILT

BID NO. 7185

COMPLETION DATE 03/25/2016

R.E. NAME DAVID HATCH

DIGALERT
DIAL TOLL FREE
1-800-422-4133
AT LEAST TWO DAYS BEFORE YOU DIG
UNDERGROUND SERVICE ALERT OF SOUTHERN CALIFORNIA

MOFFATT & NICHOL
3780 KILROY AIRPORT WAY, SUITE 600
LONG BEACH, CALIFORNIA, 90806
562-426-9551

DATE

REGISTERED PROFESSIONAL ENGINEER
M.S. NICHOL
NO. C60129
EXP. 06/30/14
CIVIL
STATE OF CALIFORNIA

MARK	REVISIONS	APPR.	DATE

DESIGNED BY RW DRAWN BY TP CHECKED BY MSN

UPRR BRIDGE 55.54 LOS ANGELES SUB

CITY OF RIVERSIDE, CALIFORNIA
PUBLIC WORKS DEPARTMENT

RIVERSIDE AVE UNDERPASS

CONSTRUCTION DETAIL CD-1

HORIZ. SCALE: AS SHOWN VERT. SCALE: AS SHOWN

ACCT. NO. -
W.O. NO. -

R-4240

SHEET 38 OF 146

FILE NO.

DRAWING NAME: \\ntapplb02\lb_projects\8318 lb13\CADD\Sheet\ROADWAY\635501CD001.dwg
PLOT DATE: Sep 27, 2016 - 9:23am PLOTTED BY: dlehigh

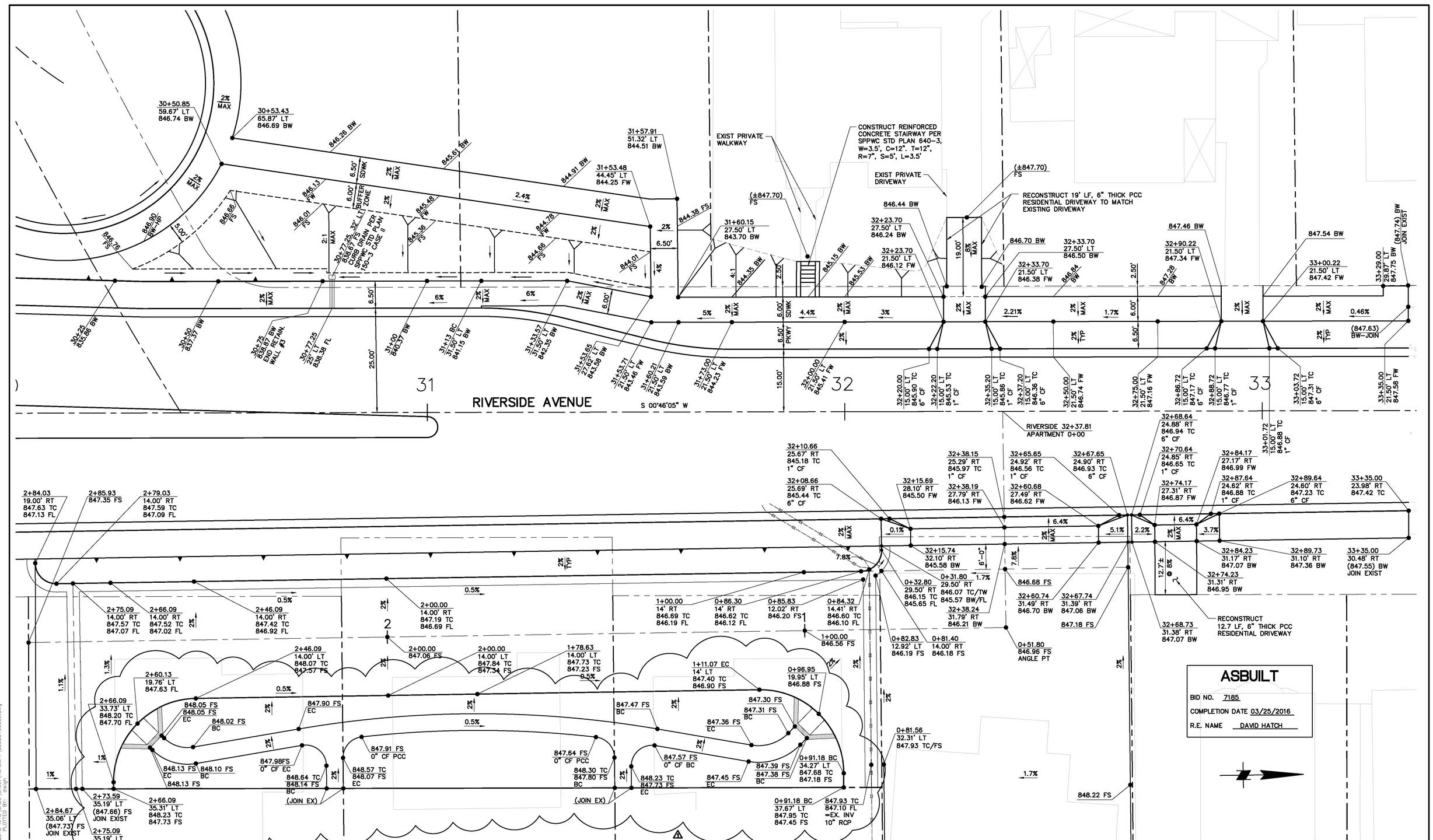

CONSTRUCTION DETAIL

RIVERSIDE AVENUE
30+00 TO 33+35
SCALE 1" = 10'

UPRR BRIDGE 55.54 LOS ANGELES SUB

DIGALERT
DIAL TOLL FREE
1-800-422-4133
AT LEAST TWO DAYS BEFORE YOU DIG
UNDERGROUND SERVICE ALERT OF SOUTHERN CALIFORNIA

MOFFATT & NICHOL
3780 KILROY AIRPORT WAY, SUITE 600
LONG BEACH, CALIFORNIA, 90806
562-426-9551

REGISTERED PROFESSIONAL ENGINEER
M.S. NICHOL
NO. C60129
EXP. 06/30/14
CIVIL
STATE OF CALIFORNIA

DATE _____

MARK	REVISIONS	APPR.	DATE
1	AS BUILT	FM	01/27/14

DESIGNED BY RW DRAWN BY TP CHECKED BY MSN

CITY OF RIVERSIDE, CALIFORNIA
PUBLIC WORKS DEPARTMENT

RIVERSIDE AVE UNDERPASS

CONSTRUCTION DETAIL CD-2

HORIZ. SCALE: AS SHOWN VERT. SCALE: AS SHOWN

ACCT. NO. -
W.O. NO. -

R-4240

SHEET 39 OF 146

FILE NO.

DRAWING NAME: \\netapp1b02\lb_projects\8318_b13\CADD\Sheet\ROADWAY\635501CD002.dwg
PLOT DATE: Sep 27, 2016 - 9:25am PLOTTED BY: dhegh

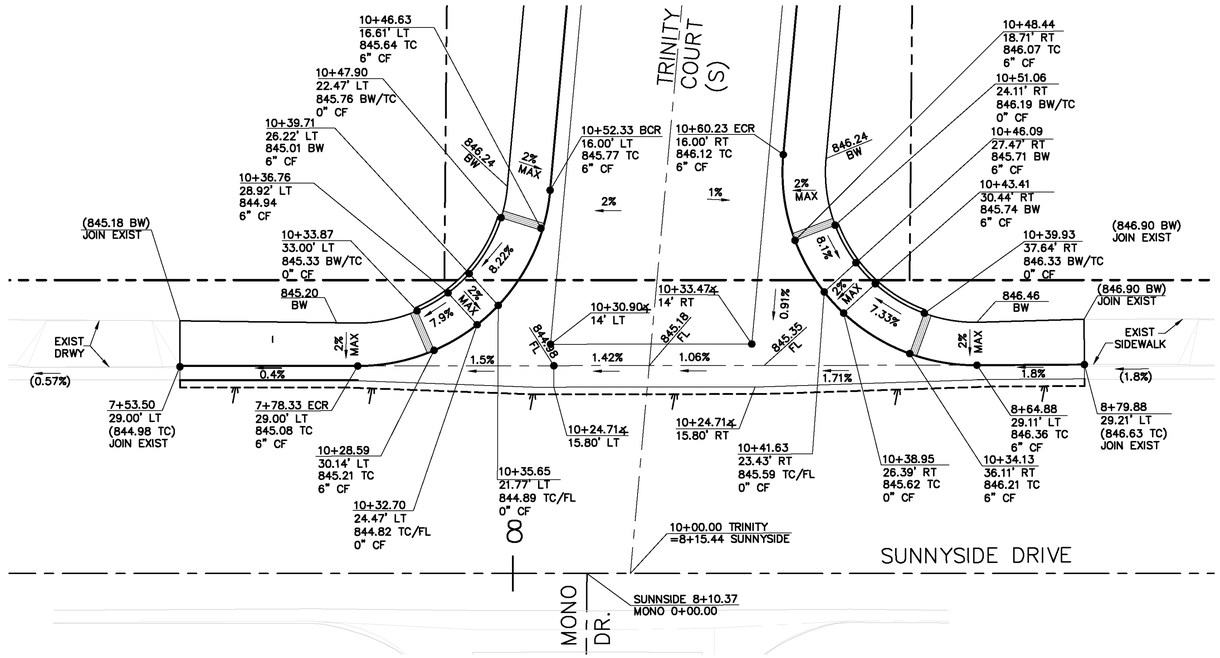

CROSS GUTTER/RAMP DETAIL

TRINITY COURT (S) @ SUNNYSIDE DRIVE
SCALE: 1" = 10'

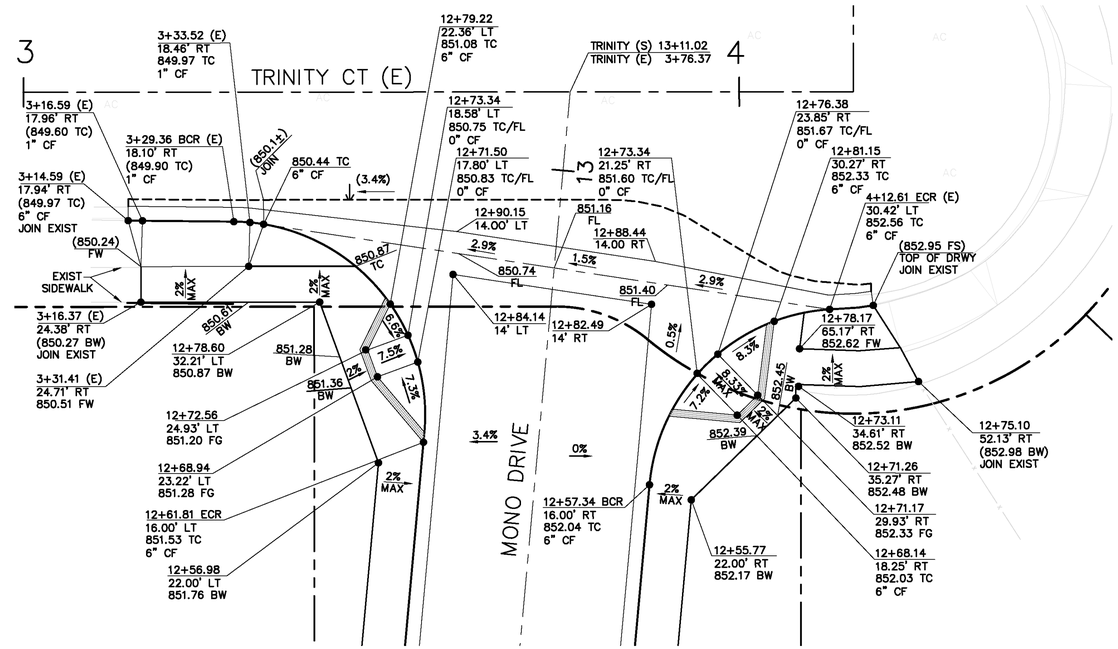

CROSS GUTTER/RAMP DETAIL

TRINITY COURT (S) @ TRINITY COURT (E)
24+36.03 28.00' LT
SCALE: 1" = 10'

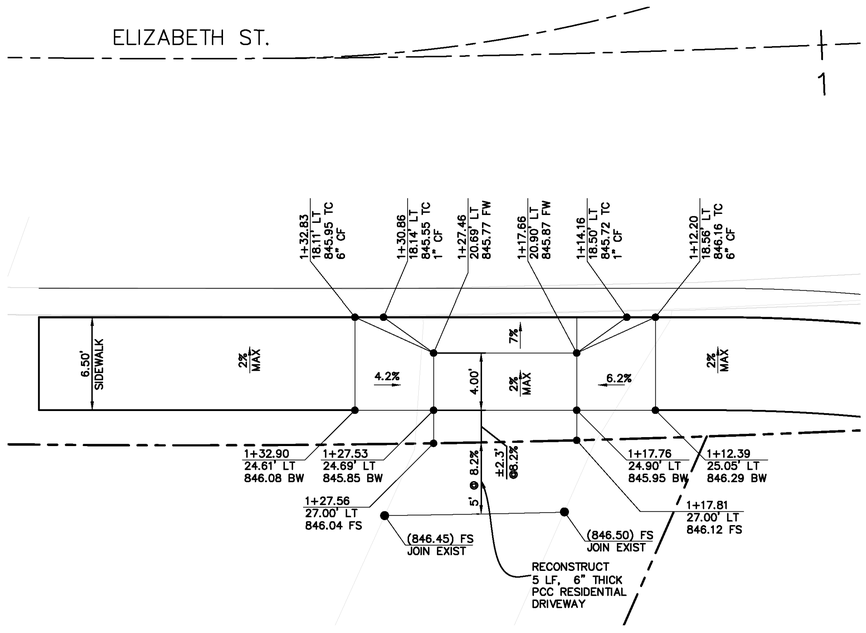

DRIVEWAY DETAIL

ELIZABETH ST.
1+22.56
SCALE: 1" = 5'

ASBUILT

BID NO. 7185
COMPLETION DATE 03/25/2016
R.E. NAME DAVID HATCH

UPRR BRIDGE 55.54 LOS ANGELES SUB

DIGALERT
DIAL TOLL FREE
1-800-422-4133
AT LEAST TWO DAYS BEFORE YOU DIG
UNDERGROUND SERVICE ALERT OF SOUTHERN CALIFORNIA

MOFFATT & NICHOL
3780 KILROY AIRPORT WAY, SUITE 600
LONG BEACH, CALIFORNIA, 90806
562-426-9551

DATE _____

REGISTERED PROFESSIONAL ENGINEER
M.S. NICHOL
NO. C60129
EXP. 06/30/14
CIVIL
STATE OF CALIFORNIA

MARK	REVISIONS	APPR.	DATE

DESIGNED BY RW DRAWN BY TP CHECKED BY MSN

CITY OF RIVERSIDE, CALIFORNIA
PUBLIC WORKS DEPARTMENT

RIVERSIDE AVE UNDERPASS

CONSTRUCTION DETAIL CD-3

HORIZ. SCALE: AS SHOWN VERT. SCALE: AS SHOWN

ACCT. NO. -
W.O. NO. -

R-4240

SHEET 40 OF 146

FILE NO.

DRAWING NAME: \\netapp1b02\lb_projects\638 lb13\CADD\Sheet\ROADWAY\635501CD003.dwg
PLOT DATE: Sep 27, 2016 - 9:23am PLOTTED BY: dhigh

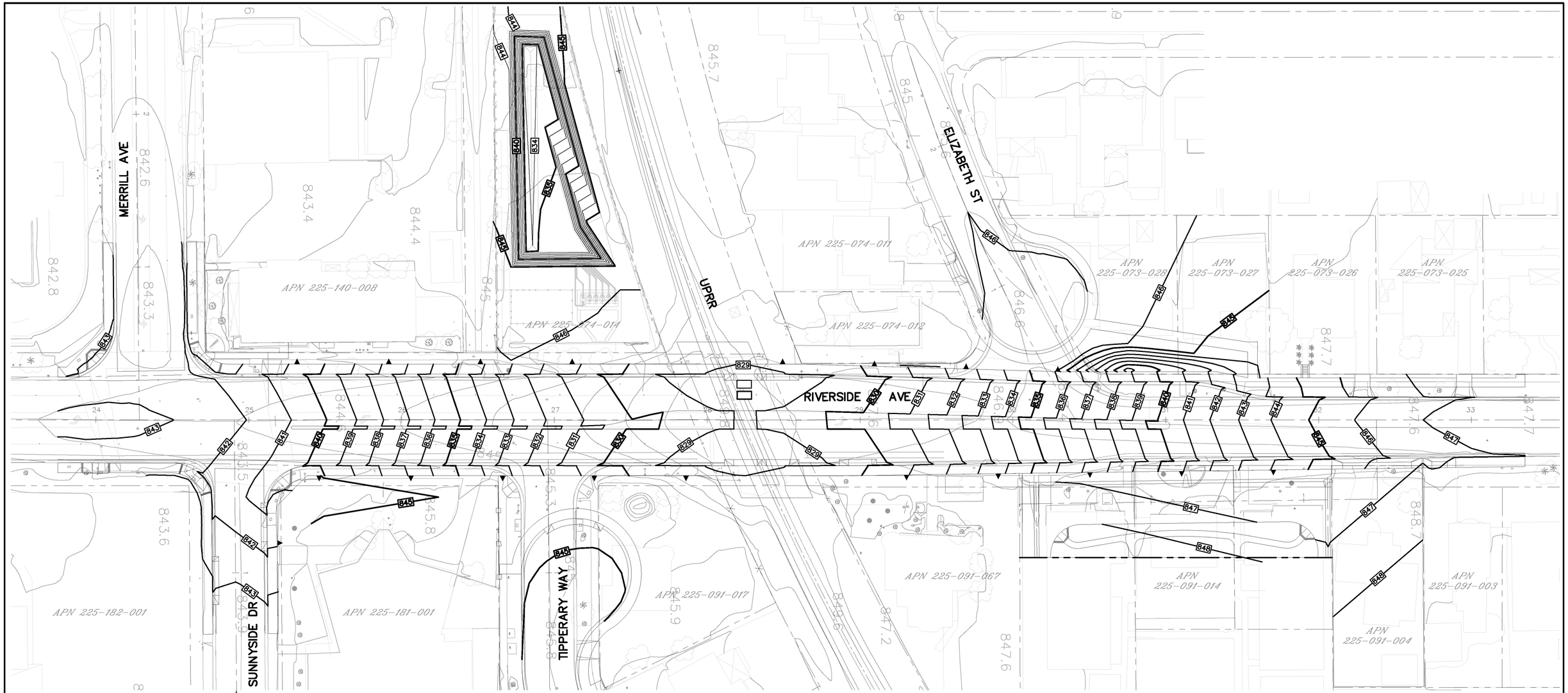

CONTOUR PLAN
SCALE: 1"=30'

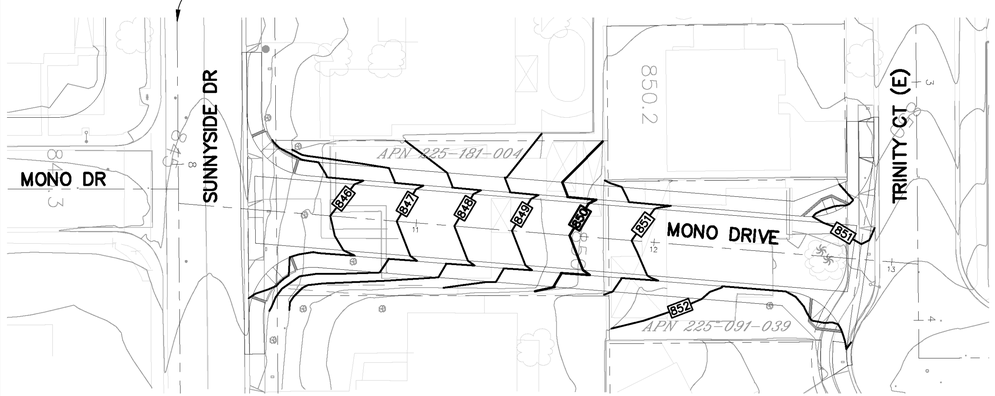

CONTOUR PLAN
SCALE: 1"=30'

ASBUILT

BID NO. 7185
COMPLETION DATE 03/25/2016
R.E. NAME DAVID HATCH

30' 0' 30' 60'
SCALE: 1"=30'

DRAWING NAME: \\metropl02\lb_projects\6318 ls13\CADD\Sheet\ROADWAY\635501C0004.dwg
PLOT DATE: Sep 27, 2016 - 9:23am PLOTTED BY: dleigh

DIGALERT
DIAL TOLL FREE
1-800-422-4133
AT LEAST TWO DAYS BEFORE YOU DIG
UNDERGROUND SERVICE ALERT OF SOUTHERN CALIFORNIA

MOFFATT & NICHOL
3780 KILROY AIRPORT WAY, SUITE 600
LONG BEACH, CALIFORNIA, 90806
562-426-9551

DATE

REGISTERED PROFESSIONAL ENGINEER
M.S. NICHOL
NO. C60129
EXP. 06/30/14
CIVIL
STATE OF CALIFORNIA

MARK	REVISIONS	APPR.	DATE

DESIGNED BY RW DRAWN BY TP CHECKED BY MSN

UPRR BRIDGE 55.54 LOS ANGELES SUB

CITY OF RIVERSIDE, CALIFORNIA
PUBLIC WORKS DEPARTMENT

RIVERSIDE AVE UNDERPASS

CONSTRUCTION DETAIL CD-4

HORIZ. SCALE: AS SHOWN VERT. SCALE: AS SHOWN

ACCT. NO. -
W.O. NO. -

R-4240

SHEET 41 OF 146

FILE NO.

SIGNING & STRIPING NOTES

(80) APPLY 8-INCH SOLID WHITE STRIPE PER CALTRANS STD PLAN A20D, DETAIL 38

(81) APPLY 4-INCH SOLID DOUBLE YELLOW STRIPE PER CALTRANS STD PLAN A20A, DETAIL 22

(82) APPLY 12-INCH SOLID YELLOW CROSSWALK MARKINGS/LIMITS

(83) APPLY 4-INCH DASHED WHITE STRIPE PER CALTRANS STD PLAN A20A, DETAIL 9

(84) APPLY PAVEMENT MARKINGS AS SHOWN PER CALTRANS STD PLAN A24A, TYPE IV

(85) APPLY 4-INCH DASHED WHITE LANE LINE EXTENSIONS THROUGH INTERSECTIONS PER CALTRANS STD PLAN A20D, DETAIL 40

(86) APPLY PAVEMENT MARKINGS AS SHOWN PER CALTRANS STD PLAN A24A, TYPE VI

(87) INSTALL SIGNS

(88) APPLY 12-INCH SOLID WHITE LIMIT LINE

(89) APPLY 4-INCH SOLID WHITE LINE

(90) PAINT MEDIAN NOSE & INSTALL RETROREFLECTIVE PAVEMENT MARKERS PER DETAIL "C" ON SHEET SP-1

(91) APPLY LEFT EDGELINES PER CALTRANS STD PLAN A20B, DETAIL 25A

(92) APPLY PAVEMENT MARKINGS AS SHOWN PER CALTRANS STD PLAN A24D

(93) APPLY 4-INCH SOLID AND 4-INCH DASHED YELLOW STRIPES PER CALTRANS STD PLAN A20B, DETAIL 32

LEGEND

PROPOSED SIGN

PROPOSED STRIPING

EXISTING STRIPING

MEDIAN NOSE DETAIL – DETAIL "C"

NOT TO SCALE

(1) PAINT MEDIAN NOSE WITH HIGHLY REFLECTIVE REMIXED TRAFFIC YELLOW PAINT WITH GLASS BEADS

(2) INSTALL TYPE H RETROREFLECTIVE PAVEMENT MARKERS ON TOP OF MEDIAN CURB NOSE AT 2' CENTER TO CENTER SPACING (MINIMUM 5 MARKERS). PLACE REFLECTIVE SURFACE OF MARKERS PARALLEL TO CENTERLINE OF ROADWAY.

GENERAL NOTES

1. SIGNING AND STRIPING INSTALLATIONS SHALL CONFORM TO THE CALIFORNIA MANUAL ON UNIFORM TRAFFIC CONTROL DEVICES (CA MUTCD), THE STATE OF CALIFORNIA DEPARTMENT OF TRANSPORTATION (CALTRANS) STANDARD PLANS AND SPECIFICATIONS DATED 2010, AND ALL ADDENDUMS THERETO, AND THE CITY OF RIVERSIDE PUBLIC WORKS DEPARTMENT STANDARD DRAWINGS, CURRENT EDITION.
2. ALL STRIPING, MARKINGS, AND LEGENDS SHALL BE REFLECTORIZED THERMOPLASTIC UNLESS OTHERWISE NOTED. THE CONTRACTOR SHALL PROVIDE AND INSTALL RAISED PAVEMENT MARKERS FOR ALL STRIPING. STRIPING, MARKINGS AND LEGENDS SHALL CONFORM TO THE LATEST CALTRANS STANDARD PLANS A20A THRU A20D AND A24A THRU A24E.
3. PRIOR TO FINAL ACCEPTANCE OF STREET IMPROVEMENTS, ALL PAVEMENT STRIPING AND STENCILING WITHIN THE PERIMETER OF THE CONSTRUCTION AREA SHALL BE RESTORED TO LIKE NEW CONDITION, IN A MANNER MEETING THE APPROVAL OF THE CITY OF RIVERSIDE.
4. THE CONTRACTOR SHALL RE-STRIPE EXISTING STRIPING AND CURB MARKINGS OBLITERATED BY NEW CONSTRUCTION, WHETHER OR NOT SHOWN ON THE PLANS FOR REPLACEMENT, AT NO COST TO THE CITY.
5. AT LOCATIONS WHERE EXISTING PAINTED CURB IS TO BE RECONSTRUCTED, THE CONTRACTOR SHALL PAINT THE NEW CURB AS SHOWN ON THE PLANS WITHIN 10 WORKING DAYS OF CURB CONSTRUCTION OR AS DIRECTED BY ENGINEER. THE PAINT SHALL BE WATER-BASED WITH 2-YEAR GUARANTEE AGAINST COLOR FADING. PRIOR TO THE START OF CONSTRUCTION, THE CONTRACTOR SHALL SUBMIT TO THE CITY WRITTEN PROOF OF THE MANUFACTURER'S 2-YEAR GUARANTEE.
6. ALL NEW STRIPING SHALL BE "CAT TRACKED" AND APPROVED BY THE ENGINEER PRIOR TO FINAL INSTALLATION. THE CONTRACTOR SHALL NOTIFY THE ENGINEER AFTER COMPLETING LAYOUT AND AT LEAST 3 WORKING DAYS BEFORE COMMENCING INSTALLATION OF STRIPING, MARKINGS AND MARKERS.
7. WHERE APPLICABLE, OUTBOUND LANE LINE DETAILS SHALL COMMENCE AT THE CROSSWALK, MEANING THE PAINTED PORTION OF THE DETAIL SHALL JOIN THE CROSSWALK.
8. TRAFFIC SIGN FACE SHALL BE 3M DIAMOND GRADE DG3 REFLECTIVE SHEETING (ASTM XI) OR APPROVED EQUAL WITH PROTECTIVE GRAFFITI OVERLAY FILM OR AS OTHERWISE NOTED. ALL WARNING SIGNS SHALL HAVE A FLUORESCENT YELLOW BACKGROUND AND SCHOOL SIGNS NOTED SHALL HAVE A FLUORESCENT YELLOW-GREEN BACKGROUND.
9. SIGNS SHALL BE STANDARD SIZE UNLESS NOTED OTHERWISE. PRIOR TO INSTALLATION, NEW SIGNS SHALL BE APPROVED BY THE CITY OF RIVERSIDE. EXACT LOCATIONS OF SIGNS SHALLBE DETERMINED BY THE CITY ENGINEER.
10. SALVAGED SIGNS AND SIGN POSTS SHALL BE DELIVERED TO THE CITY OF RIVERSIDE SIGN DEPARTMENT.
11. WHEN PAINT IS SPECIFIED, TRAFFIC STRIPES AND MARKINGS SHALL BE APPLIED IN TWO COATS. A MINIMUM OF SEVEN DAYS SHALL BE PROVIDED BETWEEN FIRST AND SECOND COATS.
12. STRIPING SHALL BE APPLIED WITHIN 48 HOURS OF SURFACE COURSE REPLACEMENT ON STREETS OPEN TO THE PUBLIC. IN NO CASE SHALL A NEWLY PAVED STREET OPEN TO THE PUBLIC BE LEFT UNSTRIPED OVER A WEEKEND OR HOLIDAY.
13. CONTRACTOR SHALL INSTALL NEW SIGN(S) AND/OR POST(S) PER CITY OF RIVERSIDE STANDARD DRAWING No. 664, SEE SPECIFICATIONS.
14. ALL CONFLICTING STRIPING, PAVEMENT MARKINGS, LEGENDS, AND RAISED PAVEMENT MARKERS SHALL BE REMOVED EVEN IF NOT SHOWN ON PLANS. REMOVALS OF PAINTED STRIPING, PAVEMENT MARKINGS AND LEGENDS SHALL BE DONE BY WET SANDBLASTING. REMOVALS OF THERMOPLASTIC STRIPING, PAVEMENT MARKINGS AND LEGENDS SHALL BE REMOVED BY WE SANDBLASTING, GRINDING OR OTHER APPROVED METHOD AND SHALL NOT DAMAGE THE PAVEMENT. 'BLACKOUT' OF EXISTING DELINEATION IS NOT PERMITTED. ALL STRIPING REMOVALS AND LEGENDS SHALL BE 'FOG SEALED'.

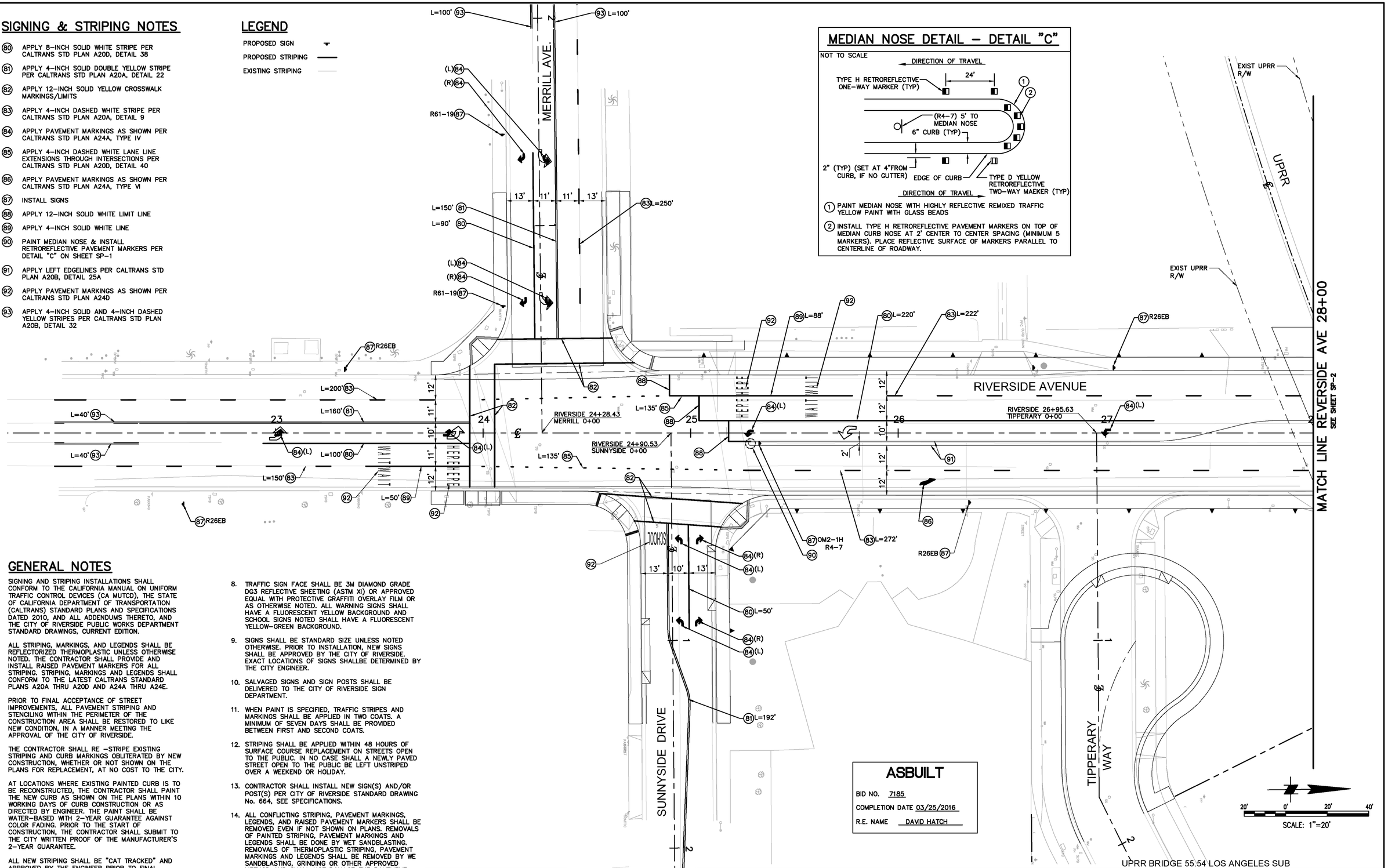

ASBUILT

BID NO. 7185

COMPLETION DATE 03/25/2016

R.E. NAME DAVID HATCH

DIGALERT

DIAL TOLL FREE 1-800-422-4133 AT LEAST TWO DAYS BEFORE YOU DIG

UNDERGROUND SERVICE ALERT OF SOUTHERN CALIFORNIA

MOFFATT & NICHOL
3780 KILROY AIRPORT WAY, SUITE 600
LONG BEACH, CALIFORNIA, 90806
562-426-9551

REGISTERED PROFESSIONAL ENGINEER M.S. NICHOL NO. C60129 EXP. 06/30/14 CIVIL STATE OF CALIFORNIA

DATE

MARK	REVISIONS	APPR.	DATE

DESIGNED BY RW DRAWN BY TP CHECKED BY MSN

UPRR BRIDGE 55.54 LOS ANGELES SUB

CITY OF RIVERSIDE, CALIFORNIA
PUBLIC WORKS DEPARTMENT

RIVERSIDE AVE UNDERPASS

SIGNING & STRIPING PLAN SP-1

HORIZ. SCALE: AS SHOWN VERT. SCALE: AS SHOWN

ACCT. NO. -
W.O. NO. -

XL-657

SHEET 42 OF 146

FILE NO.

DRAWING NAME: \\metroplib02\lb_projects\8318 lb13\CADD\Sheet\SIGNING & STRIPING\163560ISP001.dwg
PLOT DATE: Sep 27, 2016 - 9:23am PLOTTED BY: dleigh

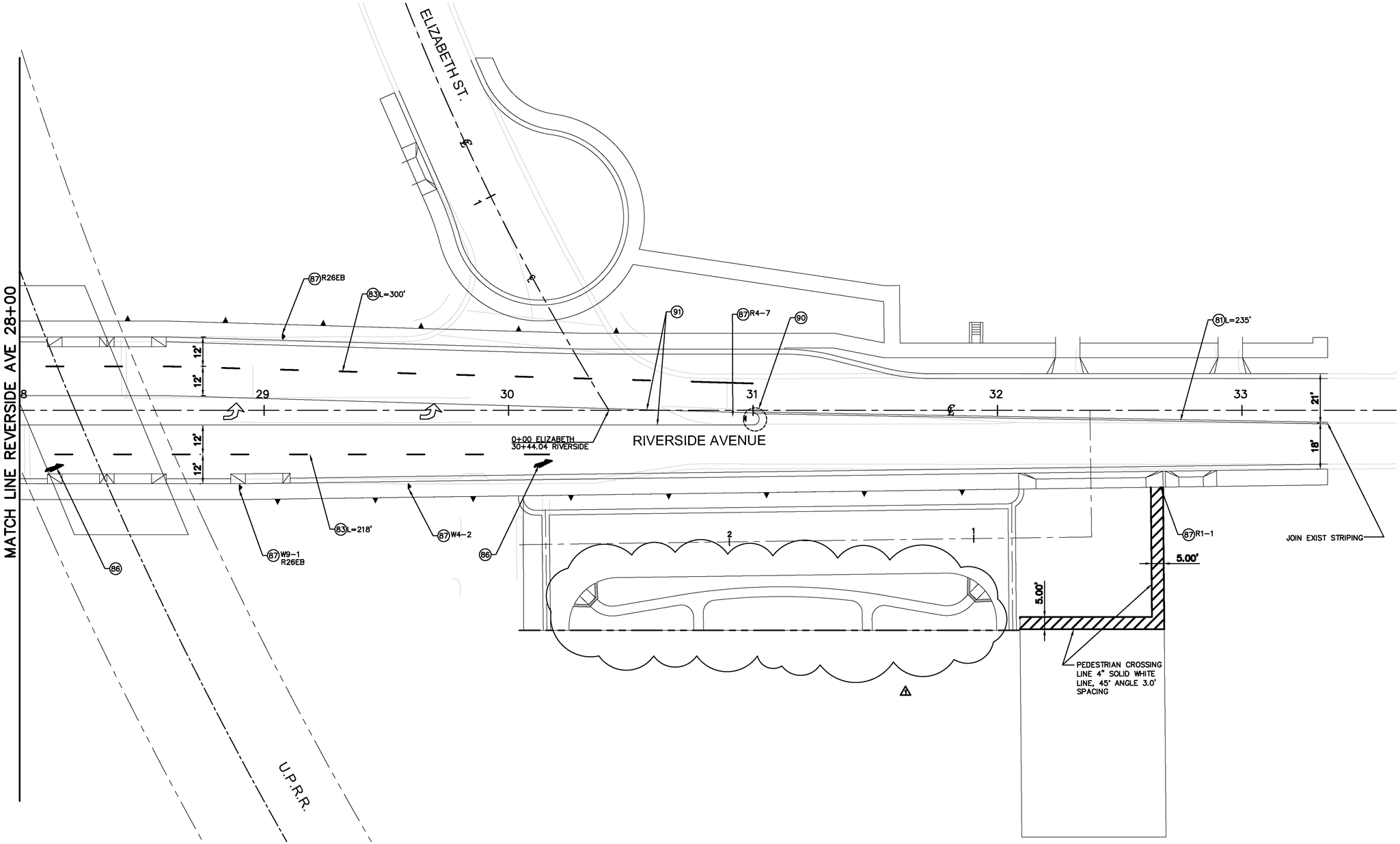

SIGNING & STRIPING NOTES

(80) APPLY 8-INCH SOLID WHITE STRIPE PER CALTRANS STD PLAN A20D, DETAIL 38

(81) APPLY 4-INCH SOLID DOUBLE YELLOW STRIPE PER CALTRANS STD PLAN A20A, DETAIL 22

(83) APPLY 4-INCH DASHED WHITE STRIPE PER CALTRANS STD PLAN A20A, DETAIL 9

(84) APPLY PAVEMENT MARKINGS AS SHOWN PER CALTRANS STD PLAN A24A, TYPE IV

(86) APPLY PAVEMENT MARKINGS AS SHOWN PER CALTRANS STD PLAN A24A, TYPE VI

(87) INSTALL SIGNS

(90) PAINT MEDIAN NOSE & INSTALL RETROREFLECTIVE PAVEMENT MARKERS PER DETAIL "C" ON SHEET SP-1

(91) APPLY LEFT EDGELINES PER CALTRANS STD PLAN A20B, DETAIL 25A

LEGEND

PROPOSED SIGN

PROPOSED STRIPING

EXISTING STRIPING

ASBUILT

BID NO. 7185

COMPLETION DATE 03/25/2016

R.E. NAME DAVID HATCH

40' 0' 40' 80'

SCALE: 1"=40'

DRAWING NAME: \\retopplb02\lb_projects\6318 lb13\CADD\Sheet\SIGNING & STRIPING\635501SP002.dwg
PLOT DATE: Sep 27, 2016 - 9:23am PLOTTED BY: dhigh

DIGALERT
DIAL TOLL FREE
1-800-422-4133
AT LEAST TWO DAYS BEFORE YOU DIG
UNDERGROUND SERVICE ALERT OF SOUTHERN CALIFORNIA

MOFFATT & NICHOL
3780 KILROY AIRPORT WAY, SUITE 600
LONG BEACH, CALIFORNIA, 90806
562-426-9551

DATE

REGISTERED PROFESSIONAL ENGINEER
M.S. NICHOL
NO. C60129
EXP. 06/30/14
CIVIL
STATE OF CALIFORNIA

MARK	REVISIONS	APPR.	DATE
1	AS BUILT	FM	01/27/14

DESIGNED BY RW DRAWN BY TP CHECKED BY MSN

UPRR BRIDGE 55.54 LOS ANGELES SUB

CITY OF RIVERSIDE, CALIFORNIA
PUBLIC WORKS DEPARTMENT

RIVERSIDE AVE UNDERPASS

SIGNING & STRIPING PLAN SP-2

HORIZ. SCALE: AS SHOWN VERT. SCALE: AS SHOWN

ACCT. NO. -
W.O. NO. -

XL-657

SHEET 43 OF 146

FILE NO.

SIGNING & STRIPING NOTES

(81) APPLY 4-INCH SOLID DOUBLE YELLOW STRIPE PER CALTRANS STD PLAN A20A, DETAIL 22

(87) INSTALL SIGNS

(88) APPLY 12-INCH SOLID WHITE LIMITS LINE

(92) APPLY PAVEMENT MARKINGS AS SHOWN PER CALTRANS STD PLAN A24D

LEGEND

PROPOSED SIGN

PROPOSED STRIPING

EXISTING STRIPING

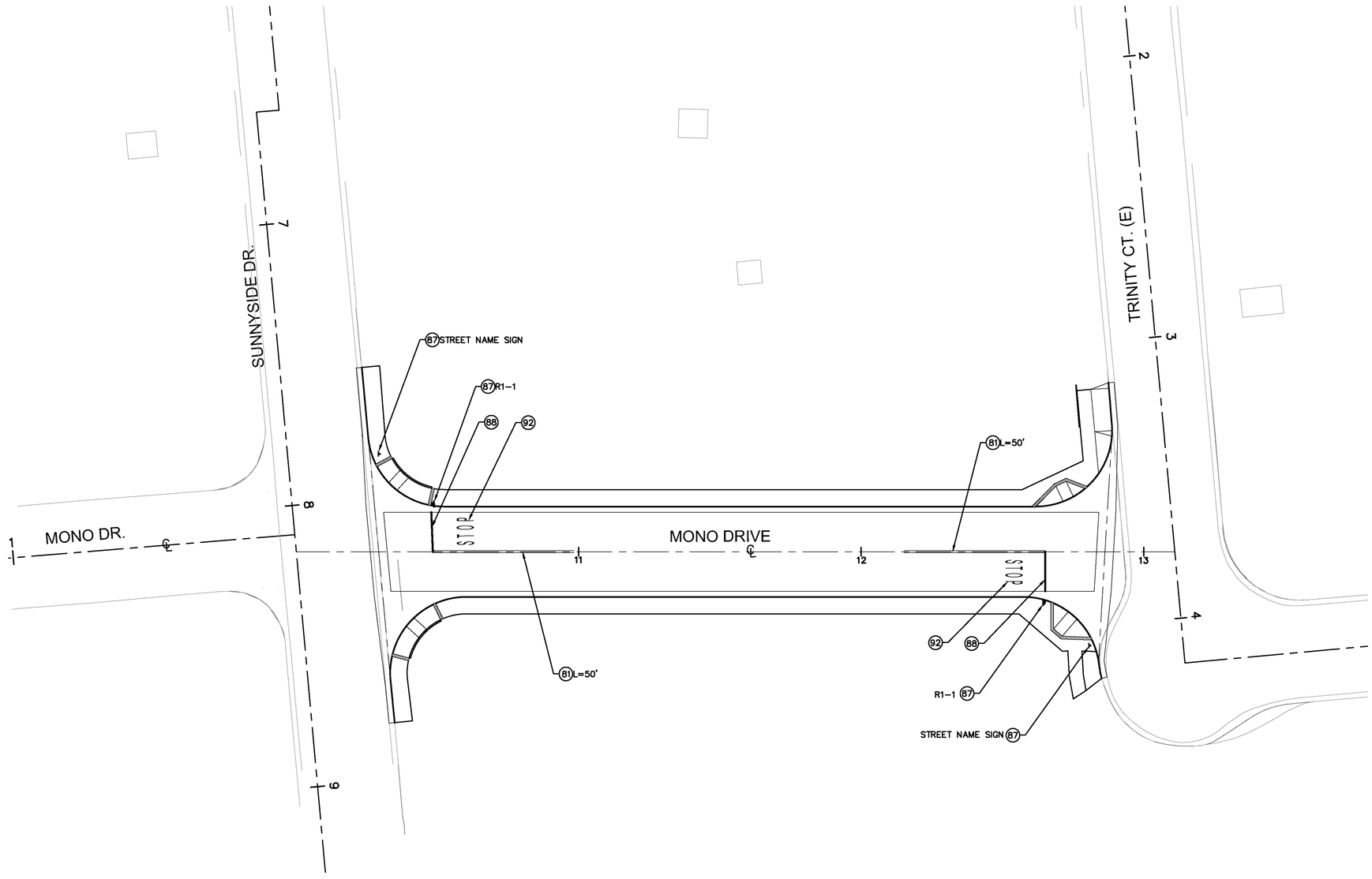

ASBUILT

BID NO. 7185

COMPLETION DATE 03/25/2016

R.E. NAME DAVID HATCH

20' 0' 20' 40'

SCALE: 1"=20'

DRAWING NAME: \\ntoppib02\ib_projects\8318.ib13\CADD\Sheet\SIGNING & STRIPING\635501SP003.dwg
PLOT DATE: Sep 27, 2016 - 9:24am PLOTTED BY: dleigh

DIGALERT
DIAL TOLL FREE
1-800-422-4133
AT LEAST TWO DAYS BEFORE YOU DIG
UNDERGROUND SERVICE ALERT OF SOUTHERN CALIFORNIA

MOFFATT & NICHOL
3780 KILROY AIRPORT WAY, SUITE 600
LONG BEACH, CALIFORNIA, 90806
562-426-9551

DATE

REGISTERED PROFESSIONAL ENGINEER
M.S. NICHOL
NO. C60129
EXP. 06/30/14
CIVIL
STATE OF CALIFORNIA

MARK	REVISIONS	APPR.	DATE

DESIGNED BY RW DRAWN BY TP CHECKED BY MSN

UPRR BRIDGE 55.54 LOS ANGELES SUB

CITY OF RIVERSIDE, CALIFORNIA
PUBLIC WORKS DEPARTMENT

RIVERSIDE AVE UNDERPASS

SIGNING & STRIPING PLAN SP-3

HORIZ. SCALE: AS SHOWN VERT. SCALE: AS SHOWN

ACCT. NO. -
W.O. NO. -

XL-657

SHEET 44 OF 146

FILE NO.

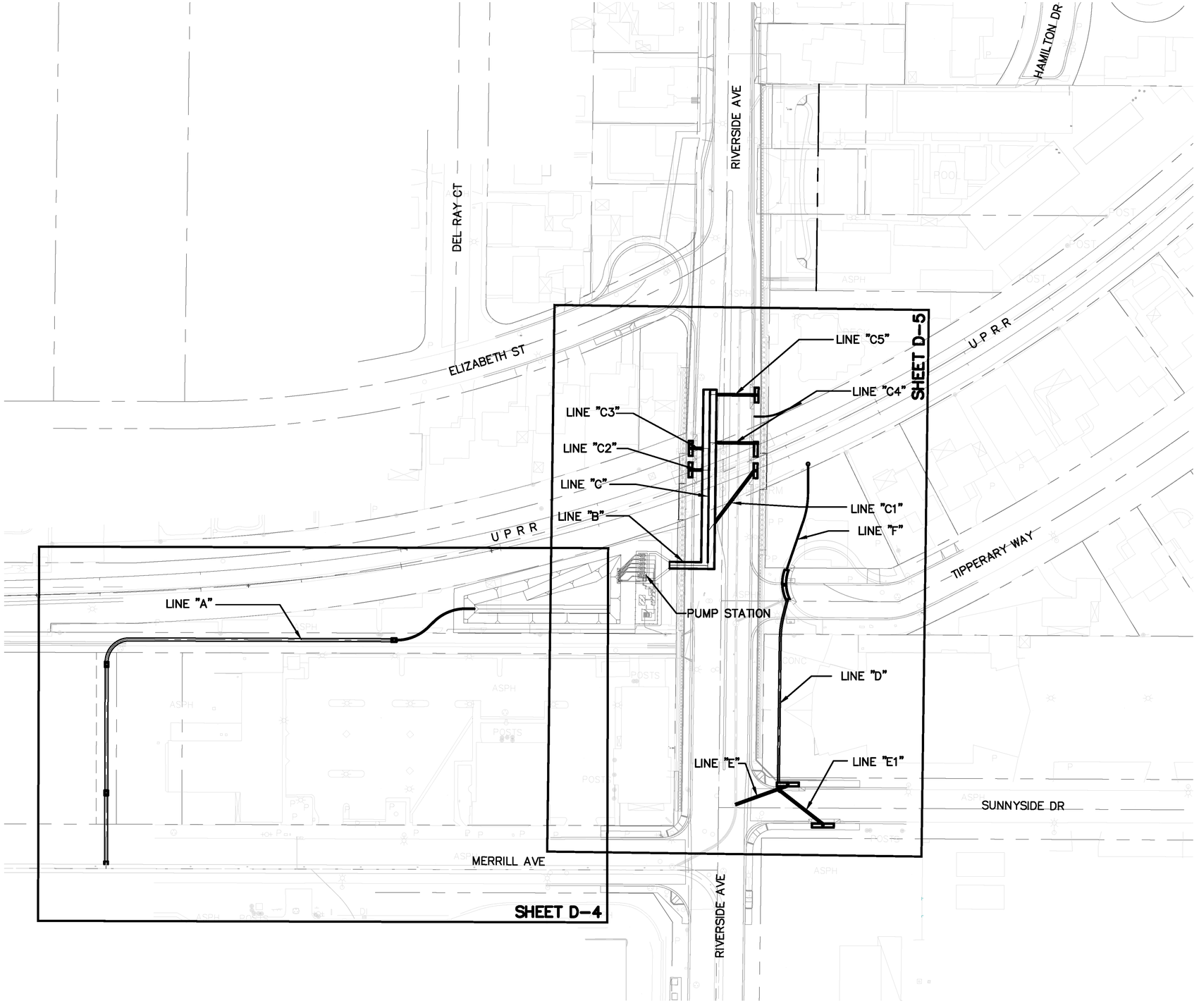

ASBUILT

BID NO. 7185

COMPLETION DATE 03/25/2016

R.E. NAME DAVID HATCH

50' 0' 50' 100'

SCALE: 1"=50'

DRAWING NAME: \\netapplib02\lb_projects\8318.lb13\CADD\Sheet\STORM DRAIN\8355010001.dwg
PLOT DATE: Sep 27, 2016 - 9:24am PLOTTED BY: dleigh

DIGALERT
DIAL TOLL FREE
1-800-422-4133
AT LEAST TWO DAYS BEFORE YOU DIG
UNDERGROUND SERVICE ALERT OF SOUTHERN CALIFORNIA

MOFFATT & NICHOL
3780 KILROY AIRPORT WAY, SUITE 600
LONG BEACH, CALIFORNIA, 90806
562-426-9551

DATE _____

REGISTERED PROFESSIONAL ENGINEER
M.S. NICHOL
NO. C60129
EXP. 06/30/14
CIVIL
STATE OF CALIFORNIA

MARK	REVISIONS	APPR.	DATE

DESIGNED BY RW DRAWN BY TP CHECKED BY MSN

UPRR BRIDGE 55.54 LOS ANGELES SUB

CITY OF RIVERSIDE, CALIFORNIA
PUBLIC WORKS DEPARTMENT

RIVERSIDE AVE UNDERPASS

DRAINAGE KEY SHEET D-1

HORIZ. SCALE: AS SHOWN VERT. SCALE: AS SHOWN

ACCT. NO. -
W.O. NO. -

D-866

SHEET 45 OF 146

FILE NO.

GENERAL NOTES:

1. NO PERSON SHALL PERFORM ANY CONSTRUCTION ACTIVITY OR INSTALL ANY OBJECTS WITHIN THE PUBLIC RIGHTS-OF-WAY OR EASEMENTS OF THE CITY OF RIVERSIDE WITHOUT A VALID CONSTRUCTION PERMIT OR, A STREET OPENING PERMIT OR AN ENCROACHMENT PERMIT ISSUED BY THE CITY'S PUBLIC WORKS DEPARTMENT.

2. IT SHALL BE THE RESPONSIBILITY OF THE CONTRACTOR TO CLEAR THE RIGHT OF WAY IN ACCORDANCE WITH THE PROVISIONS OF LAW AS IT AFFECTS EACH UTILITY INCLUDING IRRIGATION LINES AND APPURTENANCES AND AT NO COST TO THE CITY.

3. CONSTRUCTION SHALL BE IN ACCORDANCE WITH THE CITY OF RIVERSIDE DEPARTMENT OF PUBLIC WORKS, STANDARD DRAWINGS, ITS SUPPLEMENTAL NOTES AND THE STANDARD SPECIFICATIONS FOR PUBLIC WORKS CONSTRUCTON. CURRENT EDITION.

4. THE PRIVATE ENGINEER SIGNING THESE PLANS IS RESPONSIBLE FOR ASSURING THE ACCURACY AND ACCEPTABILITY OF THE WORK HEREON. IN THE EVENT OF DISCREPANCIES ARISING DURING CONSTRUCTION. THE PRIVATE ENGINEER SHALL BE RESPONSIBLE FOR DETERMINING AN ACCEPTABLE SOLUTION AND REVISING THE PLANS FOR APPROVAL BY THE CITY (THIS NOTE REQUIRED ON ALL PLANS)

5. QUANTITIES SHOWN ARE FOR INFORMATION ONLY AND THE CITY OF RIVERSIDE IS NOT RESPONSIBLE FOR THEIR ACCURACY.

6. WHEN A PORTION OF THE WORK IS TO BE DONE BY THE CITY, THE CONTRACTOR SHALL GIVE THE CITY 60-DAYS NOTICE SO THAT THE CONTRACTOR'S WORK AND THE CITY'S WORK CAN BE PROPERLY COORDINATED. THE CONTRACTOR SHALL PREPARE AND COMPACT THE SUBGRADE TO ELEVATIONS WITHIN +/- .1' OF THE DESIGN ELEVATIONS SHALL BE RESPONSIBLE FOR THE CONDITION OF THE SUBGRADE UNTIL ACCEPTED BY THE CITY. THE CONTRACTOR SHALL ALSO BE RESPONSIBLE FOR ANY BARRICADING DURING THIS TIME.

7. THE CONTRACTOR SHALL CONTACT THE PUBLIC WORKS DEPARTMENT 30 DAYS PRIOR TO BEGINNING CONSTRUCTION TO NEGOTIATE THE COST OF THE CITY'S PORTION OF THE WORK.

8. THE CONTRACTOR SHALL BE RESPONSIBLE FOR PRESERVING OR RE-ESTABLISHING AND REFERENCING SURVEY MONUMENTS DESTROYED. DISTURBED OR BURIED ASA RESULT OF CONSTRUCTION SHOWN HEREON.

9. WHERE NEW PAVEMENT IS TO JOIN THE EXSISTING PAVEMENT, THE EDGE OF THE EXSISTING PAVEMENT SHALL BE TRIMMED IN A SMOOTH AND STRAIGHT LINE. CONSTRUCT MATCH-UP PAVING AS SHOWN ON THE PLANS AND OVERLAY PAVING AS DIRECTED IN THE FIELD TO PRODUCE A SMOOTH SECTION.

10. CONSTRUCT DRIVEWAY APPOACHES PER STANDARD DRAWING 302. EXACT SIZE AND LOCATION TO BE STAKED BY THE CONTRACTOR PRIOR TO CONSTRUCTION OF THE CURB AND CUTTER.

11. STREET OPENING PERMIT FOR CONSTRUCTION AND/OR MODIFICATION OF TRAFFIC SIGNAL FACILITIES IS REQUIRED.

12. ALL TRAFFIC SIGNS SHALL BE INSTALLED PRIOR TO OPENING THE STREETS TO TRAFFIC.

13. ANY TRAFFIC CONTROL STRIPING OBLITERATED AND/OR BADLY WORN DURING CONSTRUCTION SHALL BE RESTORED BY THE CONTRACTOR WITHIN FIVE DAYS AFTER NOTIFICATION FROM THE CITY INSPECTORS.

14. STREET IMPROVEMENT WORK THAT WILL CAUSE DAMAGE TO THE DETECTOR LOOP(S) SHALL NOT BE PERFORMED UNTIL TRAFFIC SIGNAL MAINTENANCE PERSONNEL HAVE BEEN NOTIFIED AND THE NECESSARY TIMING ADJUSTMENTS ARE MADE TO MAINTAIN SIGNAL OPERATION.

15. FINAL STRIPING FOR TRAFFIC CONTROL AND/OR PAVEMENT MARKING TO BE THE RESPONSIBILITY OF THE CONTRACTOR.

16. EXISTING UTILITIES SHOWN ON THESE PLANS ARE PLOTTED FROM UTILITY RECORDS. THE CONTRACTOR IS REQUIRED TO TAKE DUE PRECAUTIONARY MEASURES TO LOCATE AND PROTECT ALL UTILITIES WHETHER OR NOT SHOWN ON THIS PLAN. THE CONTRACTOR SHALL CALL IN A LOCATION REQUEST TO UNDERGROUND SERVICE ALERT (USA). PHONE #1-800-227-2600 OR 1-800-422-4133. TWO WORKING DAYS BEFORE DIGGING. SECTION 4216/4217 OF THE GOVERNMENT CODE REQUIRES A DIG ALERT IDENTIFICATION NUMBER BE ISSUED BEFORE A PERMIT WILL BE ISSUED BY THE PUBLIC WORKS DEPARTMENT INVOLVING EXCAVATION FOR UNDERGROUND FACILITIES.

17. CONTRACTOR IS TO VERIFY EXSISTING SEWER ELEVATION PRIOR TO CONSTRUCTION.

18. LOCATION OF LATERALS TO BE DETERMINED IN THE FIELD AT THE DIRECTION OF THE OWNER. AVOID CONFLICT WITH PROPOSED AND/OR EXSISTING FACILITIES.

19. A PLUG SHALL BE INSTALLED AND WILL REMAIN IN PLACE WHERE THE NEW SEWER CONNECTS WITH THE EXISTING SEWER UNTIL THE NEW SEWER IS ACCEPTED BY THE CITY.

20. CONTRACTOR SHALL ADJUST MANHOLES TO FINAL GRADE AFTER PAVING IS COMPLETED.

21. CONTRACTOR TO GIVE RCFC 5-DAYS WRITTEN NOTICE PRIOR TO STARTING WORK ON STORM DRAIN (OR DOING ANY WORK WITH RCFC EASEMENTS). RCFC ENCROACHMENT PERMIT NO._ _ _ _ _ _ _

22. IN PAVEMENT OVERLAY AREAS, ANY DISTRESSED EXSISTING PAVEMENT SHALL BE REMOVED AND PLACED AS DIRECTED BY THE INSPECTOR PRIOR TO OVERLAYING WITH A.C. PAVING.

23. ALL ELEVATIONS AND OFFSET SHOWN ON THE PLANS SHALL BE STAKED IN THE FIELD AND VERIFIED PRIOR TO CONSTRUCTION. ALL ELEVATIONS, OFFSETS, AND DIMENSIONS SHOWN FOR RETAINING WALLS AND DRIVEWAYS ON OR ADJACENT TO PRIVATE PROPERTY SHALL BE VERIFIED PRIOR TO CONSTRUCTION.

24. PRIME CONTRACTORS BIDDING THIS WORK SHALL HAVE A CLASS "A" CONTRACTORS LICENSE.

25. PRIOR TO ISSUANCE OF GRADE SHEETS FOR ANY PROPOSED SEWER AND STORM DRAIN FACILITIES CONTRACTOR SHALL EXPOSE ALL UTILITIES WHICH CROSS OR MAY BE IN CONFLICT WITH THE PROPOSED SEWER AND STORM DRAIN FACILITIES AND COORDINATE WITH THE INSPECTOR TO HAVE THE LOCATION AND ELEVATION VERIFIED BY CITY'S/CONTRACTOR'S SURVEYORS.

26. CONTRACTOR SHALL COMPLY WITH ALL LOCAL, STATE, AND FEDERAL SAFETY CODES AND REGULATIONS AND THE SPECIFICATIONS FOR THIS CONTRACT.

27. ALL CONSTRUCTION ACTIVITIES SHALL BE SCHEDULES AND COORDINATED THROUGH THE ENGINEER, INCLUDING THE VARIOUS COMPANIES. AGENCIES AND OTHER CONTRACTORS WHO MAY BE AFFECTED BY THIS WORK. ALL REQUIRED PERMITS INCLUDING RAILROAD RIGHT-OF-WAY PERMITS NEEDED FOR THE WORK SHALL BE OBTAINED BY THE CONTRACTOR UNLESS OTHERWISE NOTED. THE CONTRACTOR SHALL COMPLY WITH ALL RAILROAD OCCUPANCY REQUIREMENTS. INCLUDING INSURANCE REQUIREMENTS, REQUIRED SAFETY TRAINING AND USE OF AND PAYMENT FOR RAILROAD FLAGMEN.

28. HORIZONTAL AND VERTICAL CONTROL POINTS FOR THE TRACK LAYOUT ARE IDENTIFIED IN THE CONTRACT DOCUMENTS. IT SHALL BE THE CONTRACTOR'S RESPONSIBILITY TO UTILIZE THESE CONTROL POINTS TO ASSURE THAT ALL FACILITIES INCLUDED IN THIS PROJECT ARE CONSTRUCTED AT CORRECT VERTICAL AND HORIZONTAL LOCATIONS.

29. SUBGRADE BELOW TRACK (I.E. WITHIN 14' OF THE CENTERLINE OF TRACK), SHALL BE COMPACTED TO 95% OF THE MAXIMUM PROCTOR DENSITY. ALL OTHER SUBGRADE WORK SHALL BE COMPACTED TO A MINIMUM OF 90% OF THE MAXIMUM PROCTOR DENSITY.

30. POSITIVE DRAINAGE MUST BE MAINTAINED AT ALL TIMES DURING CONSTRUCTION TO PREVENT PONDING OF WATER.

31. THE CONTRACTOR SHALL COMPLY WITH THE STATE OF CALIFORNIA NPDES PERMIT REGARDING THE TREATMENT OF WATER BEFORE DISCHARGING OFF THE UPRR R/W.

32. THE CONTRACTOR SHALL PROTECT ALL UPRR SIGNAL FACILITIES IN PLACE. THE CONTRACTOR SHALL FIELD VERIFY ALL DIMENSIONS FOR CONFLICTS WITH EXISTING UTILITIES. SIGNAL CABLES/EQUIPMENT AND/OR OTHER ITEMS THAT MIGHT IMPAIR CONSTRUCTION ACTIVITIES. INCONSISTENCIES FOUND SHALL BE REPORTED TO THE ENGINEER.

33. REPAIRS TO FACILITIES INTENDED TO REMAIN IN PLACE SHALL BE MADE BY THE CONTRACTOR AT THE CONTRACTOR'S EXPENSE UNLESS OTHERWISE STATED IN THE CONTRACT DOCUMENTS OR BY THE ENGINEER.

34. ALL EXCAVATED WASTE MATERIAL SHALL BE IMMEDIATELY REMOVED FROM THE SITE. ON SITE STORAGE OF EXCAVATED WASTE MATERIAL SHALL NOT BE PERMITTED AT ANY TIME. SUITABLE EXCAVATED MATERIAL SHALL BE STOCKPILED PER APPROVAL BY THE ENGINEER.

35. ON-SITE CONSTRUCTION BY OTHERS. INCLUDING ROUTINE MAINTENANCE WORK, (UPRR FORCES, UPRR SIGNAL CONTRACTOR, SCRRA, UTILITIES, ETC.) MAY OCCUR DURING THE CONSTRUCTION PERIOD OF THIS CONTRACT. THE CONTRACTOR SHALL COORDINATE ACTIVITIES THROUGH THE ENGINEER SO AS TO MINIMIZE INTERFERENCE WITH OTHERS.

36. PRIOR TO COMMENCING WORK. ALL EXISTING SITE CONDITIONS SHALL BE FIELD VERIFIED WITH THE ENGINEER TO ASCERTAIN THE LIMITS OF WORK ACTIVITIES. THE CONTRACTOR SHALL SUBMIT AND RECEIVE THE ENGINEER'S APPROVAL OF THE CONTRACTOR'S PROJECT SCHEDULE AND OPERATIONS PLAN. EACH ITEM OF WORK SHALL BE DESCRIBED AND ACCOUNTED FOR IN THE CONTRACT DOCUMENTS. THE CONTRACTOR SHALL REFER TO THE SPECIFICATIONS FOR FURTHER INFORMATION REGARDING SUBMITTAL REQUIREMENTS.

37. RAIL TRAFFIC DISRUPTIONS SHALL BE KEPT TO A MINIMUM, DISRUPTIONS IN RAIL TRAFFIC THAT MAY BE REQUIRED SHALL BE COORDINATED WITH THE ENGINEER BEFOREHAND. NO SUCH WORK SHALL BE COMMENCED WITHOUT THE ENGINEER'S APPROVAL WORK AFFECTING SCRRA COMMUTER TRAIN OPERATIONS AND UPRR FREIGHT TRAFFIC MUST BE MAINTAINED THROUGHOUT THE CONSTRUCTION PERIOD.

38. THE CONTRACTOR SHALL NOT PLACE MATERIAL AND/OR EQUIPMENT WITHIN 25 FEET OF ANY TRACK AT ANY TIME WITHOUT PRIOR APPROVAL OF THE ENGINEER.

39. EXISTING RAILROAD SIGNAGE (INCLUDING SPEED SIGNS) SHALL BE MAINTAINED DURING THE CONSTRUCTION PERIOD. ALL RAILROAD SIGNAGE SHALL BE FULLY RESTORED UPON COMPLETION OF EACH DAYS WORK IN ACCORDANCE WITH UPRR ENGINEERING STANDARDS. PRIOR TO CONSTRUCTION, NO TRESPASSING SIGNS SHALL BE PLACED IN ACCORDANCE WITH UPRR STD DWG 0538A AND AS SHOWN ON THE DRAWINGS.

40. ALL WORK SHALL BE COORDINATED WITH UPRR'S SIGNAL ENGINEER, SIGNAL FORCES AND SIGNAL CONTRACTOR THRU THE ENGINEER. WORK SHALL BE PHASED TO EFFECT THE CONTINUED OPERATION OF EXISTING SIGNAL SYSTEM DURING CONSTRUCTION. IN NO INSTANCE MAY WORK PROCEED IN ANY AREA WITHOUT ADVANCED APPROVAL OF UPRR'S SIGNAL ENGINEER. THE CONTRACTOR SHALL LOCATE ALL SIGNAL AND COMMUNICATION CONDUITS, CABLES, WIRES, OR OTHER TRACK, TRACK BED, AND RIGHT-OF-WAY.

41. WALKWAYS SHALL BE PLACED AS REQUIRED BY CALIFORNIA PUBLIC UTILITIES COMMISSION GENERAL ORDER NO.118 AND 260 FOR ALL NEW CONSTRUCTION. UNLESS NOTED OTHERWISE.

42. DIMENSIONS SHOWN IN PARENTHESES INDICATED APPROXIMATE EXISTING DIMENSIONS. WHERE ELEVATIONS ARE SHOWN IN PARENTHESES AT JOIN LOCATIONS. THE CONTRACTOR SHALL VERIFY THESE ELEVATIONS PRIOR TO CONSTRUCTION AND JOIN FEATURES AT EXISTING ELEVATIONS.

ASBUILT

BID NO. 7185

COMPLETION DATE 03/25/2016

R.E. NAME DAVID HATCH

DRAWING NAME: \\ntaopbd02\lb_projects\318 lb13\CADD\Sheet\STORM DRAIN\635010002.dwg
PLOT DATE: Sep 27, 2016 - 9:24am PLOTTED BY: dleigh

DIGALERT
DIAL TOLL FREE
1-800-422-4133
AT LEAST TWO DAYS BEFORE YOU DIG
UNDERGROUND SERVICE ALERT OF SOUTHERN CALIFORNIA

MOFFATT & NICHOL
3780 KILROY AIRPORT WAY, SUITE 600
LONG BEACH, CALIFORNIA, 90806
562-426-9551

DATE _____

REGISTERED PROFESSIONAL ENGINEER
M.S. NICHOL
NO. C60129
EXP. 06/30/14
CIVIL
STATE OF CALIFORNIA

MARK	REVISIONS	APPR.	DATE

DESIGNED BY RW DRAWN BY TP CHECKED BY MSN

UPRR BRIDGE 55.54 LOS ANGELES SUB

CITY OF RIVERSIDE, CALIFORNIA
PUBLIC WORKS DEPARTMENT

RIVERSIDE AVE UNDERPASS

GENERAL NOTES D-2

HORIZ. SCALE: AS SHOWN VERT. SCALE: AS SHOWN

ACCT. NO. -
W.O. NO. -

D-866

SHEET 46 OF 146

FILE NO.

LEGEND:

PROP RCP STORM DRAIN

PROP JUNCTION STRUCTURE

PROP CONCRETE COLLAR

PROP MH

PROP MH

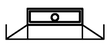
PROP CATCH BASIN
AND PROP LOCAL DEPRESSION

PROP SINGLE RCB

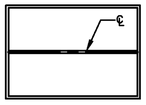
PROP DOUBLE RCB

PROP 8" SEWER

PROP TELE

PROP 4" GAS

PROP 8" GAS

PROP 2" WATER

PROP 8" WATER

PROP 30" WATER

PROP OVERHEAD ELEC

PROP ELEC

ABANDON/REMOVE UTILITY LINE

ABBREVIATIONS:

AVE	AVENUE
BC	BEGIN OF HORIZONTAL CURVE
CB	CATCH BASIN
CFS	CUBIC FEET PER SECOND
CIDH	CAST IN DRILLED HOLE
℄	CENTERLINE
CONTS	CONSTRUCT
DIA	DIAMETER
DEMO	DEMOLISH, DEMOLITION
DWG	DRAWING
EC	END OF HORIZONTAL CURVE
EL	ELEVATION
ELEC	ELECTRIC
ES	EXISTING SURFACE
ESMT	EASEMENT
EXIST	EXISTING
FPS	FEET PER SECOND
FS	FINISH SURFACE
H	HEIGHT
HGL	HYDRAULIC GRADE LINE
INT	INTERSECTION
INV	INVERT
JS	JUNCTION STRUCTURE
LF	LINEAL FEET
LT	LEFT
MH	MANHOLE
MIN	MINIMUM
PIP	PROTECT IN PLACE
PROP	PROPOSED
Q50	50 YEAR STORM FLOW RATE
RCB	REINFORCED CONCRETE BOX
RCFC	RIVERSIDE COUNTY FLOOD CONTROL
RCP	REINFORCED CONCRETE PIPE
RT	RIGHT
S	SLOPE
ST	STREET
STA	STATION
STD	STANDARD
UG	UNDERGROUND
UPRR	UNION PACIFIC RAILROAD
V50	50 YEAR STORM VELOCITY
W	WIDTH
WCD	WATER CONSERVATION DISTRICT
±	PLUS OR MINUS

CONSTRUCTION NOTES

(100) CONSTRUCT CATCH BASIN (OMIT STEPS) PER CITY OF RIVERSIDE STD DRAWING NO 405

(101) CONSTRUCT JUNCTION STRUCTURE PER CITY OF RIVERSIDE STD DRAWING NO 421

(102) INSTALL 6" DIA SDR 35 PVC PIPE WITH BEDDING CASE 1 (NO SAND) PER CITY OF RIVERSIDE STD DRAWING NO. 452

(103) CONSTRUCT MANHOLE PER CITY OF RIVERSIDE STD DRAWING NO 430

(104) NOT USED

(105) INSTALL 18" DIA RCP (D-LOAD PER PLAN), WITH BEDDING CASE 1 (NO SAND) PER CITY OF RIVERSIDE STD DRAWING NO. 452

(106) CONSTRUCT JUNCTION STRUCTURE PER RCFC & WCD STD DRAWING NO JS226

(107) NOT USED

(108) CONSTRUCT CONCRETE COLLAR PER CITY OF RIVERSIDE STD DRAWING NO 424

(109) CONSTRUCT REINFORCED CONCRETE SINGLE BOX CULVERT PER CALTRANS STD PLAN D80 (SIZE PER PLAN), WITH BEDDING CASE 1 (NO SAND) PER CITY OF RIVERSIDE STD DRAWING NO. 452

(110) CONSTRUCT REINFORCED CONCRETE DOUBLE BOX CULVERT PER CALTRANS STD PLAN D81 (SIZE PER PLAN), WITH BEDDING CASE 1 (NO SAND) PER CITY OF RIVERSIDE STD DRAWING NO. 452

(112) INSTALL 24" DIA RCP (D-LOAD PER PLAN), WITH BEDDING CASE 1 (NO SAND) PER CITY OF RIVERSIDE STD DRAWING NO. 452

(113) INSTALL 36" DIA RCP (D-LOAD PER PLAN), WITH BEDDING CASE 1 (NO SAND) PER CITY OF RIVERSIDE STD DRAWING NO. 452

(114) CONSTRUCT CSP INLET PER CITY OF RIVERSIDE STD DRAWING NO 412

(115) INSTALL 14" DIAMETER SDR 35 PVC PIPE WITH BEDDING CASE 1 (NO SAND) PER CITY OF RIVERSIDE STD DRAWING NO. 452

REMOVAL NOTES

[54] ABANDON AND REMOVE INTERFERING PORTION OF STORM DRAIN PIPE

[55] CUT & PLUG STORM DRAIN PIPE WITH BRICK & MORTAR

[56] ADJUST EXISTING MANHOLE TO GRADE

[57] REMOVE STORM DRAIN MANHOLE

[58] REMOVE CATCH BASIN

ASBUILT

BID NO. 7185

COMPLETION DATE 03/25/2016

R.E. NAME DAVID HATCH

UPRR BRIDGE 55.54 LOS ANGELES SUB

DIGALERT
DIAL TOLL FREE
1-800-422-4133
AT LEAST TWO DAYS BEFORE YOU DIG
UNDERGROUND SERVICE ALERT OF SOUTHERN CALIFORNIA

MOFFATT & NICHOL
3780 KILROY AIRPORT WAY, SUITE 600
LONG BEACH, CALIFORNIA, 90806
562-426-9551

DATE

REGISTERED PROFESSIONAL ENGINEER
M.S. NICHOL
NO. C60129
EXP. 06/30/14
CIVIL
STATE OF CALIFORNIA

MARK	REVISIONS	APPR.	DATE

DESIGNED BY RW DRAWN BY TP CHECKED BY MSN

CITY OF RIVERSIDE, CALIFORNIA
PUBLIC WORKS DEPARTMENT

RIVERSIDE AVE UNDERPASS

LEGEND, ABBREVIATIONS, AND CONSTRUCTION NOTES D-3

HORIZ. SCALE: AS SHOWN VERT. SCALE: AS SHOWN

ACCT. NO. -
W.O. NO. -

D-866

SHEET 47 OF 146

FILE NO.

DRAWING NAME: \\ntoppb02\fs_projects\8318 lb13\CADD\Sheet\STORM DRAIN\635501D003.dwg
PLOT DATE: Sep 27, 2016 - 9:24am PLOTTED BY: dleigh

CONSTRUCTION NOTES

(103) CONSTRUCT MANHOLE PER CITY OF RIVERSIDE STD DRAWING NO 430

(105) INSTALL 18" DIA RCP (D-LOAD PER PLAN) WITH BEDDING CASE 1 (NO SAND) PER CITY OF RIVERSIDE STD DRAWING NO. 452

(106) CONSTRUCT JUNCTION STRUCTURE PER RCFC & WCD STD DRAWING NO JS226

(113) INSTALL 36" DIA RCP (D-LOAD PER PLAN) WITH BEDDING CASE 1 (NO SAND) PER CITY OF RIVERSIDE STD DRAWING NO. 452

CURVE DATA					
		Δ	R (FT)	L (FT)	T (FT)
*	1	90°00'04"	22.50'	35.34'	22.50'
	2	44°23'13"	45.00'	34.86'	18.36'
	3	45°00'00"	45.00'	35.34'	18.64'

* BEVELED PIPE TO BE USED

UPRR

50'

STA 12+40.07 EC=
STA 5+83.76, 227.25 RT
(MERRILL AVE)

STA 15+83.07 EC=
STA 2+49.84, 258.60' RT
(MERRILL AVE)

STA 15+92.07=
STA 2+40.84, 258.51' RT
(MERRILL AVE)
END 18" RCP
SEE OUTLET
DETAIL ON DWG
PS-4

PROP DETENTION BASIN,
SEE DWG PS-2

STA 15+47.73 BC
STA 2+81.80, 245.77' RT
(MERRILL AVE)

STA 15+39.61 EC
STA 2+87.60, 260.09' RT
(MERRILL AVE)

N89°50'42.08"W, 264.68'

N89°13'55.20"W, 9.00'

N45°46'04.80"E, 8.12'

ALLEY

20' ALLEY

7'

13'

STA 12+04.73 BC=
STA 6+6.26, 204.75 RT
(MERRILL AVE)
END MH
BEGIN 36" RCP

STA 12+00.07
END 36" RCP
BEGIN MH

EXIST SEWER MH (PIP)

LINE "A"
PROFILE ON SHEET D-6

EXIST 8" SEWER

STA 15+00.09
END 36" RCP
BEGIN MH

STA 15+04.75 BC=
STA 3+19.08, 227.25', RT
(MERRILL AVE)
END MH BEGIN 18" RCP

STA 15+02.42
CL MH SHAFT (103)

STA 12+02.40
CL MH SHAFT (103)

PROP 20' WIDE SD EASEMENT
CONSTRUCTION OF THE STORM DRAIN SHALL BE LIMITED TO WITHIN EASEMENT. ALL EXISTING IMPROVMENTS ARE TO BE REPLACED IN KIND

CONSTRUCT TEMPORARY CHAIN LINK FENCE ON WEST SIDE OF EASEMENT LINE PER CITY OF RIVERSIDE STD. PLAN NO. 380

N00°09'14.11"E, 204.73'

STA 10+77.33
END MH
BEGIN 36" RCP

STA 10+72.67
END 36" RCP
BEGIN MH

STA 10+75.00
CL MH SHAFT (103)

EXIST ELEC
EXIST 8" WATER
EXIST ELEC
EXIST GAS

N00°09'14.11"E, 75.00'

STA 10+06.78
END JS, BEGIN 36" RCP

STA 10+04.20
BEGIN JS, A=90°00'00"
B=36", C=7.2'

EXIST 8'-5"W X 10'H RCB PER RCFC & WCD MAGNOLIA CENTER STORM DRAIN PROJECT NO. 1-0-190 SHEET 13

MERRILL AVENUE
(N89°50'46"E)

STA 10+00.00 LINE "A" CL INT=
STA 115+34.79 EXIST 8'-5"W X 10'H RCB=
STA 6+06.26 (MERRILL AVE)

44'

88'

MERRILL 0+00
RIVERSIDE 24+28.43
N 2293581.67
E 6216589.94

RIVERSIDE AVE

MERRILL AVE

20' 0' 20' 40'

SCALE: 1"=20'

NOTES:

1. FOR EXISTING UTILITY INFORMATION SEE THE UTILITY DISPOSITION SHEETS
2. FOR OTHER PROPOSED UTILITY INFORMATION, SEE CORRESPONDING SHEETS

ASBUILT

BID NO. 7185

COMPLETION DATE 03/25/2016

R.E. NAME DAVID HATCH

DIGALERT
DIAL TOLL FREE
1-800-422-4133
AT LEAST TWO DAYS BEFORE YOU DIG
UNDERGROUND SERVICE ALERT OF SOUTHERN CALIFORNIA

MOFFATT & NICHOL
3780 KILROY AIRPORT WAY, SUITE 600
LONG BEACH, CALIFORNIA, 90806
562-426-9551

DATE

REGISTERED PROFESSIONAL ENGINEER
M.S. Nichol
M.S. NICHOL
NO. C60129
EXP. 06/30/14
CIVIL
STATE OF CALIFORNIA

MARK	REVISIONS	APPR.	DATE

DESIGNED BY RW DRAWN BY TP CHECKED BY MSN

UPRR BRIDGE 55.54 LOS ANGELES SUB

CITY OF RIVERSIDE, CALIFORNIA
PUBLIC WORKS DEPARTMENT

RIVERSIDE AVE UNDERPASS

DRAINAGE PLAN D-4

HORIZ. SCALE: AS SHOWN VERT. SCALE: AS SHOWN

ACCT. NO. -
W.O. NO. -

D-866

SHEET 48 OF 146

FILE NO.

DRAWING NAME: \\netapp602\lb_projects\8318 lb13\CADD\Sheet\STORM DRAIN\635501D004.dwg
PLOT DATE: Sep 27, 2016 - 2:49pm PLOTTED BY: dleigh

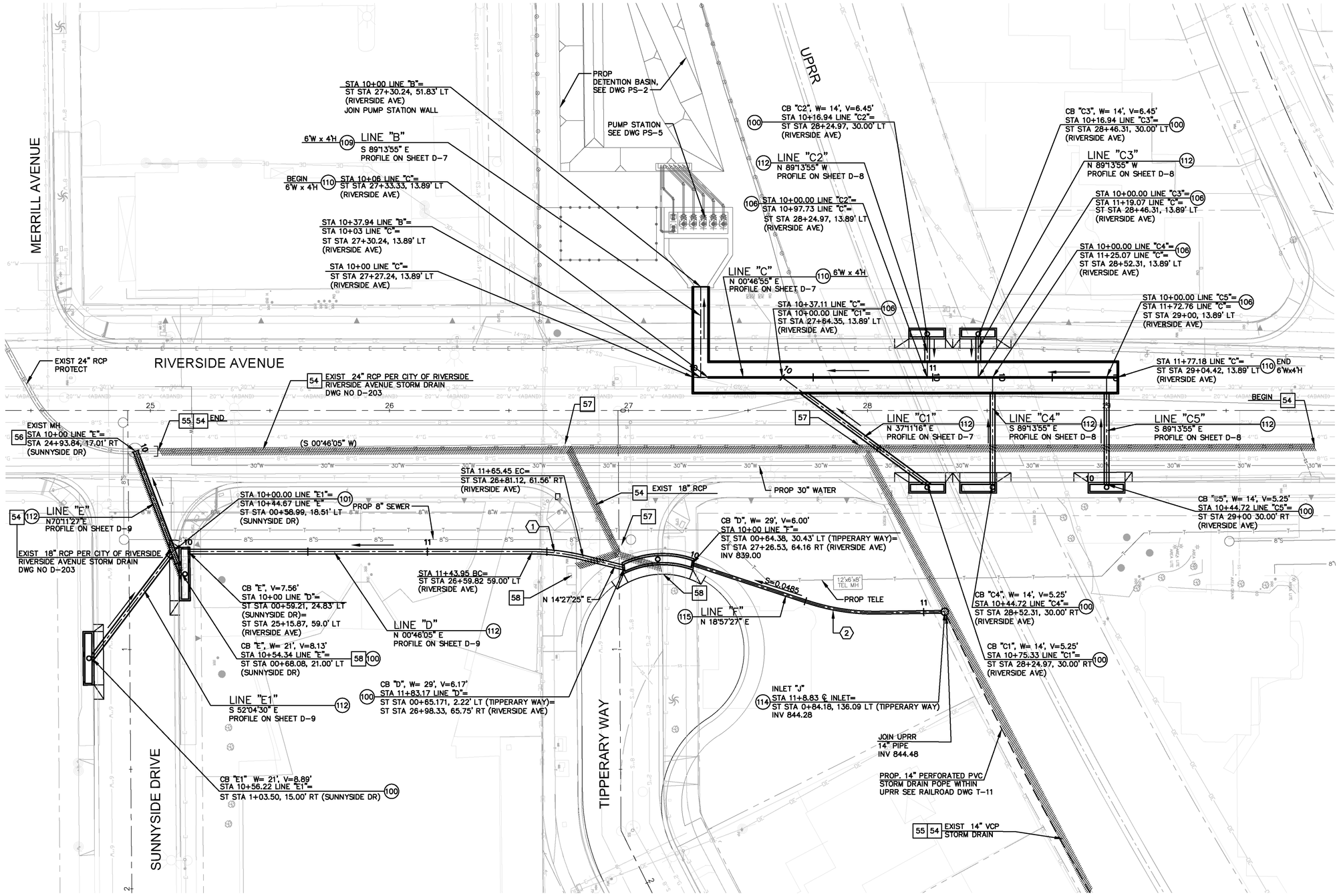

CONSTRUCTION NOTES

(100) CONSTRUCT CATCH BASIN (OMIT STEPS) PER CITY OF RIVERSIDE STD DRAWING NO 405

(101) CONSTRUCT JUNCTION STRUCTURE PER CITY OF RIVERSIDE STD DRAWING NO 421

(104) NOT USED

(106) CONSTRUCT JUNCTION STRUCTURE PER RCFC & WCD DRAWING NO JS226

(108) CONSTRUCT CONCRETE COLLAR PER CITY OF RIVERSIDE STD DRAWING NO 424

(109) CONSTRUCT REINFORCED CONCRETE SINGLE BOX CULVERT PER CALTRANS STD PLAN D80 (SIZE PER PLAN), WITH BEDDING CASE 1 (NO SAND) PER CITY OF RIVERSIDE STD DRAWING NO. 452

(110) CONSTRUCT REINFORCED CONCRETE DOUBLE BOX CULVERT PER CALTRANS STD PLAN D81 (SIZE PER PLAN), WITH BEDDING CASE 1 (NO SAND) PER CITY OF RIVERSIDE STD DRAWING NO. 452

(112) INSTALL 24" DIA RCP (D-LOAD PER PLAN) WITH BEDDING CASE 1 (NO SAND) PER CITY OF RIVERSIDE STD DRAWING NO. 452

(114) CONSTRUCT CSP INLET PER CITY OF RIVERSIDE STD DRAWING NO 412

(115) INSTALL 14" DIAMETER SDR 35 PVC PIPE WITH BEDDING CASE 1 (NO SAND) PER CITY OF RIVERSIDE STD DRAWING NO. 452

REMOVAL NOTES

54 ABANDON AND REMOVE INTERFERING PORTION OF STORM DRAIN PIPE

55 CUT & PLUG STORM DRAIN PIPE WITH BRICK & MORTAR

56 ADJUST EXISTING MANHOLE TO GRADE

57 REMOVE STORM DRAIN MANHOLE

58 REMOVE CATCH BASIN

CURVE DATA

⬡	Δ	R (FT)	L (FT)	T (FT)
1	13°41'20"	90'	21.50'	10.80'
2	18°57'4"	90'	29.79	15.02'

ASBUILT

BID NO. 7185

COMPLETION DATE 03/25/2016

R.E. NAME DAVID HATCH

20' 0' 20' 40'

SCALE: 1"=20'

NOTES:

1. FOR EXISTING UTILITY INFORMATION SEE THE UTILITY DISPOSITION SHEETS
2. FOR OTHER PROPOSED UTILITY INFORMATION, SEE CORRESPONDING SHEETS

DIGALERT — DIAL TOLL FREE 1-800-422-4133 AT LEAST TWO DAYS BEFORE YOU DIG — UNDERGROUND SERVICE ALERT OF SOUTHERN CALIFORNIA

MOFFATT & NICHOL
3780 KILROY AIRPORT WAY, SUITE 600
LONG BEACH, CALIFORNIA, 90806
562-426-9551

DATE

REGISTERED PROFESSIONAL ENGINEER — M.S. NICHOL — NO. C60129 — EXP. 06/30/14 — CIVIL — STATE OF CALIFORNIA

MARK	REVISIONS	APPR.	DATE

DESIGNED BY RW DRAWN BY TP CHECKED BY MSN

UPRR BRIDGE 55.54 LOS ANGELES SUB

CITY OF RIVERSIDE, CALIFORNIA
PUBLIC WORKS DEPARTMENT

RIVERSIDE AVE UNDERPASS

DRAINAGE PLAN D-5

HORIZ. SCALE: AS SHOWN VERT. SCALE: AS SHOWN

ACCT. NO. -
W.O. NO. -

D-866

SHEET 49 OF 146

FILE NO.

DRAWING NAME: \\metroplx02\lb_projects\8318 lb13\CADD\Sheet\STORM DRAIN\635501D005.dwg
PLOT DATE: Sep 27, 2016 - 9:24am PLOTTED BY: dleigh

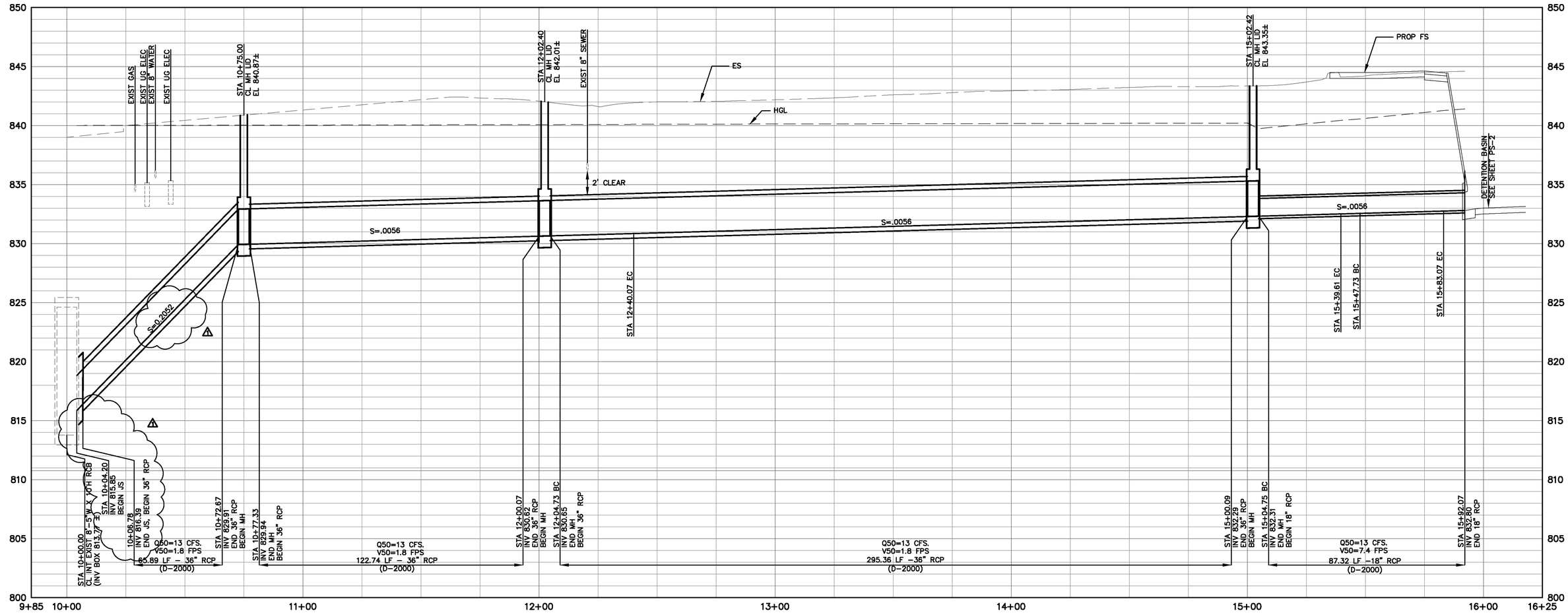

LINE "A"

ASBUILT

BID NO. 7185

COMPLETION DATE 03/25/2016

R.E. NAME DAVID HATCH

DIGALERT
DIAL TOLL FREE
1-800-422-4133
AT LEAST TWO DAYS BEFORE YOU DIG
UNDERGROUND SERVICE ALERT OF SOUTHERN CALIFORNIA

MOFFATT & NICHOL
3780 KILROY AIRPORT WAY, SUITE 600
LONG BEACH, CALIFORNIA, 90806
562-426-9551

DATE

REGISTERED PROFESSIONAL ENGINEER
M.S. Nichol
M.S. NICHOL
NO. C60129
EXP. 06/30/14
CIVIL
STATE OF CALIFORNIA

MARK	REVISIONS	APPR.	DATE
⚠	REV. INV ELEV PER STD DRWG JS226	FM	08/15/14
		RAB	08/25/14

DESIGNED BY RW DRAWN BY TP CHECKED BY MSN

UPRR BRIDGE 55.54 LOS ANGELES SUB

CITY OF RIVERSIDE, CALIFORNIA
PUBLIC WORKS DEPARTMENT

RIVERSIDE AVE UNDERPASS

DRAINAGE PROFILES. LINE "A" D–6

HORIZ. SCALE: AS SHOWN VERT. SCALE: AS SHOWN

HORZ. SCALE: 1" = 20'
VERT. SCALE: 1" = 4'

ACCT. NO. –
W.O. NO. –

D–866

SHEET 50 OF 146

FILE NO.

DRAWING NAME: \\netapp1p02\lb_projects\8318 lb13\CADD\Sheet\STORM DRAIN\635501006.dwg
PLOT DATE: Sep 27, 2016 - 9:24am PLOTTED BY: dreigh

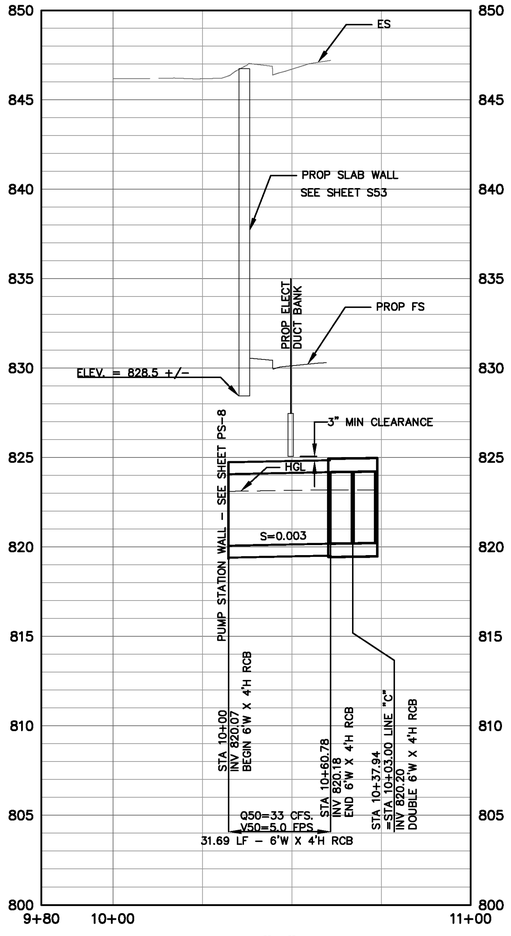

LINE "B"

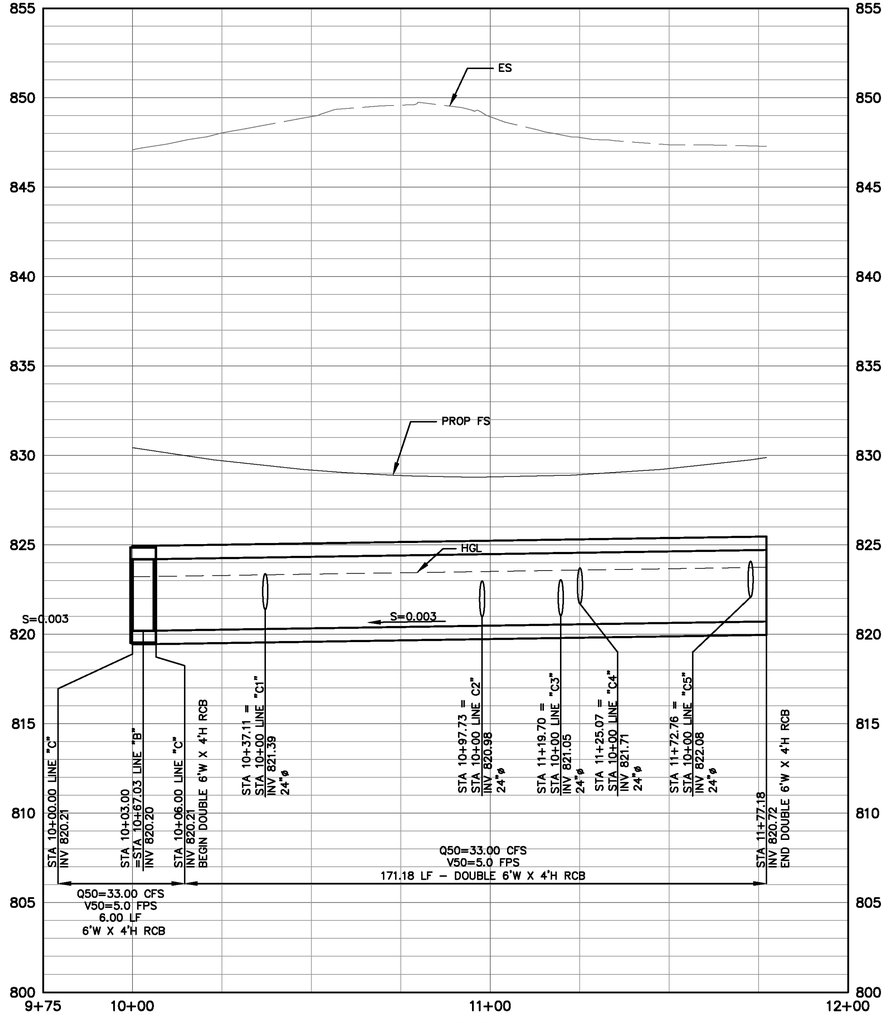

LINE "C"

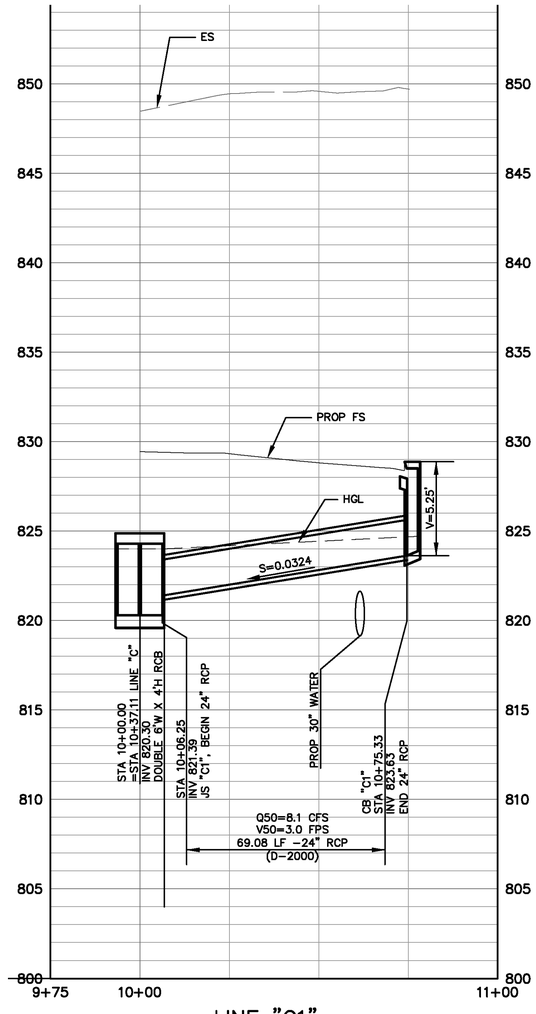

LINE "C1"

ASBUILT

BID NO. 7185

COMPLETION DATE 03/25/2016

R.E. NAME DAVID HATCH

UPRR BRIDGE 55.54 LOS ANGELES SUB

HORZ. SCALE: 1" = 20'
VERT. SCALE: 1" = 4'

DIGALERT
DIAL TOLL FREE
1-800-422-4133
AT LEAST TWO DAYS BEFORE YOU DIG
UNDERGROUND SERVICE ALERT OF SOUTHERN CALIFORNIA

MOFFATT & NICHOL
3780 KILROY AIRPORT WAY, SUITE 600
LONG BEACH, CALIFORNIA, 90806
562-426-9551

DATE

REGISTERED PROFESSIONAL ENGINEER
M.S. NICHOL
NO. C60129
EXP. 06/30/14
CIVIL
STATE OF CALIFORNIA

MARK	REVISIONS	APPR.	DATE

DESIGNED BY RW DRAWN BY TP CHECKED BY MSN

CITY OF RIVERSIDE, CALIFORNIA
PUBLIC WORKS DEPARTMENT

RIVERSIDE AVE UNDERPASS

DRAINAGE PROFILES, LINES "B", "C", "C1" D-7

HORIZ. SCALE: AS SHOWN VERT. SCALE: AS SHOWN

ACCT. NO. -
W.O. NO. -

D-866

SHEET 51 OF 146

FILE NO.

DRAWING NAME: \\netapp1b02\lb_projects\8318 (b13)\CADD\Sheet\STORM DRAIN\635501D007.dwg
PLOT DATE: Sep 27, 2016 - 9:24am PLOTTED BY: dleigh

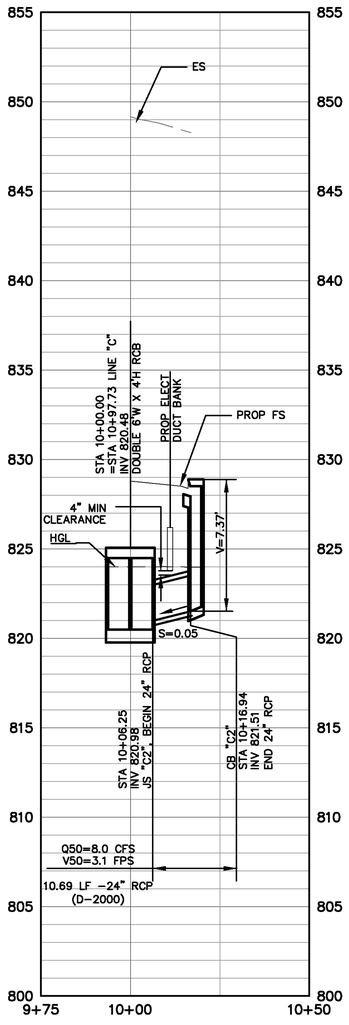

LINE "C2"

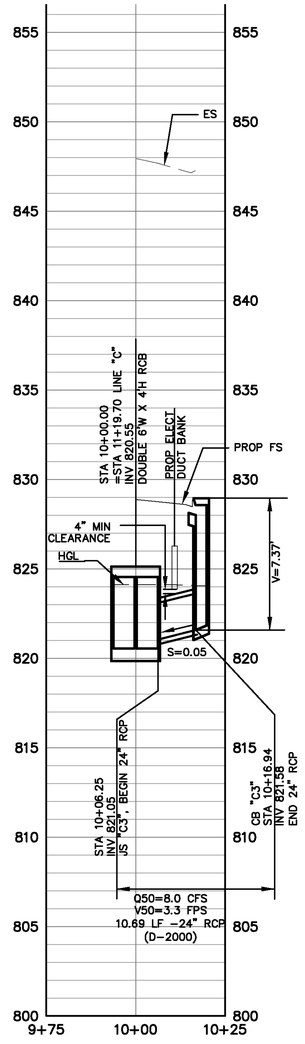

LINE "C3"

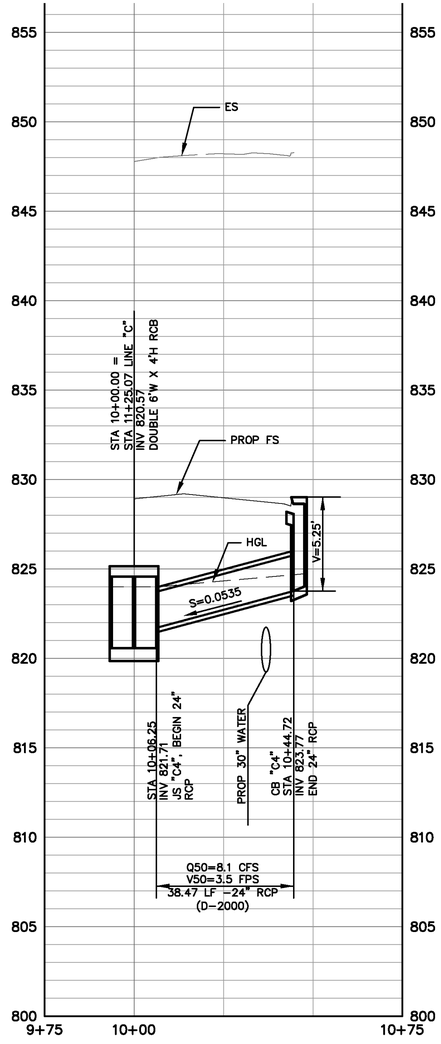

LINE "C4"

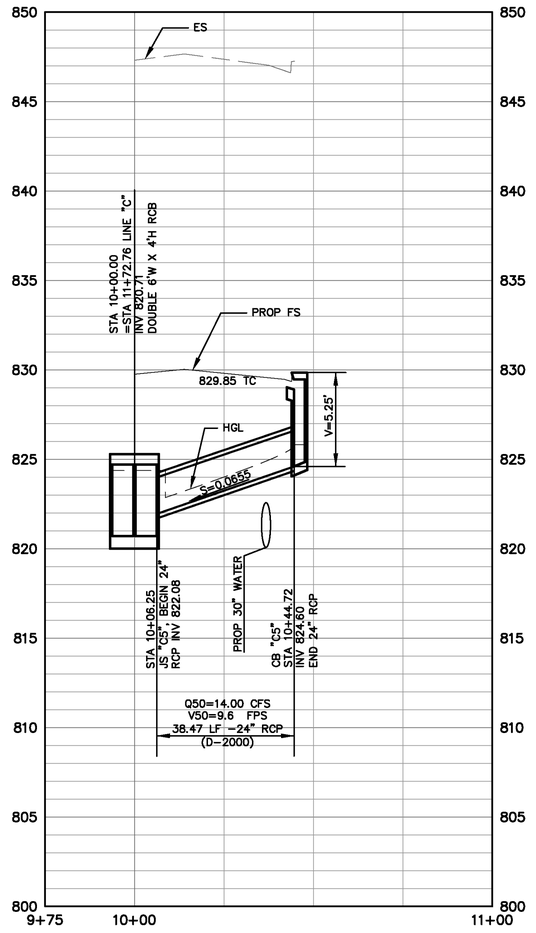

LINE "C5"

ASBUILT

BID NO. 7185

COMPLETION DATE 03/25/2016

R.E. NAME DAVID HATCH

UPRR BRIDGE 55.54 LOS ANGELES SUB

HORZ. SCALE: 1" = 20'
VERT. SCALE: 1" = 4'

DIGALERT
DIAL TOLL FREE
1-800-422-4133
AT LEAST TWO DAYS BEFORE YOU DIG
UNDERGROUND SERVICE ALERT OF SOUTHERN CALIFORNIA

MOFFATT & NICHOL
3780 KILROY AIRPORT WAY, SUITE 600
LONG BEACH, CALIFORNIA, 90806
562-426-9551

DATE

REGISTERED PROFESSIONAL ENGINEER
M.S. Nichol
M.S. NICHOL
NO. C50129
EXP. 06/30/14
CIVIL
STATE OF CALIFORNIA

MARK	REVISIONS	APPR.	DATE

DESIGNED BY RW DRAWN BY TP CHECKED BY MSN

CITY OF RIVERSIDE, CALIFORNIA
PUBLIC WORKS DEPARTMENT

RIVERSIDE AVE UNDERPASS

DRAINAGE PROFILES, LINES "C2","C3","C4","C5" D-8

HORIZ. SCALE: AS SHOWN VERT. SCALE: AS SHOWN

ACCT. NO. -
W.O. NO. -

D-866

SHEET 52 OF 146

FILE NO.

DRAWING NAME: \\netapp1b02\lb_projects\8318 lb13\CADD\Sheet\STORM DRAIN\635501D008.dwg
PLOT DATE: Sep 27, 2016 - 9:24am PLOTTED BY: dhegh

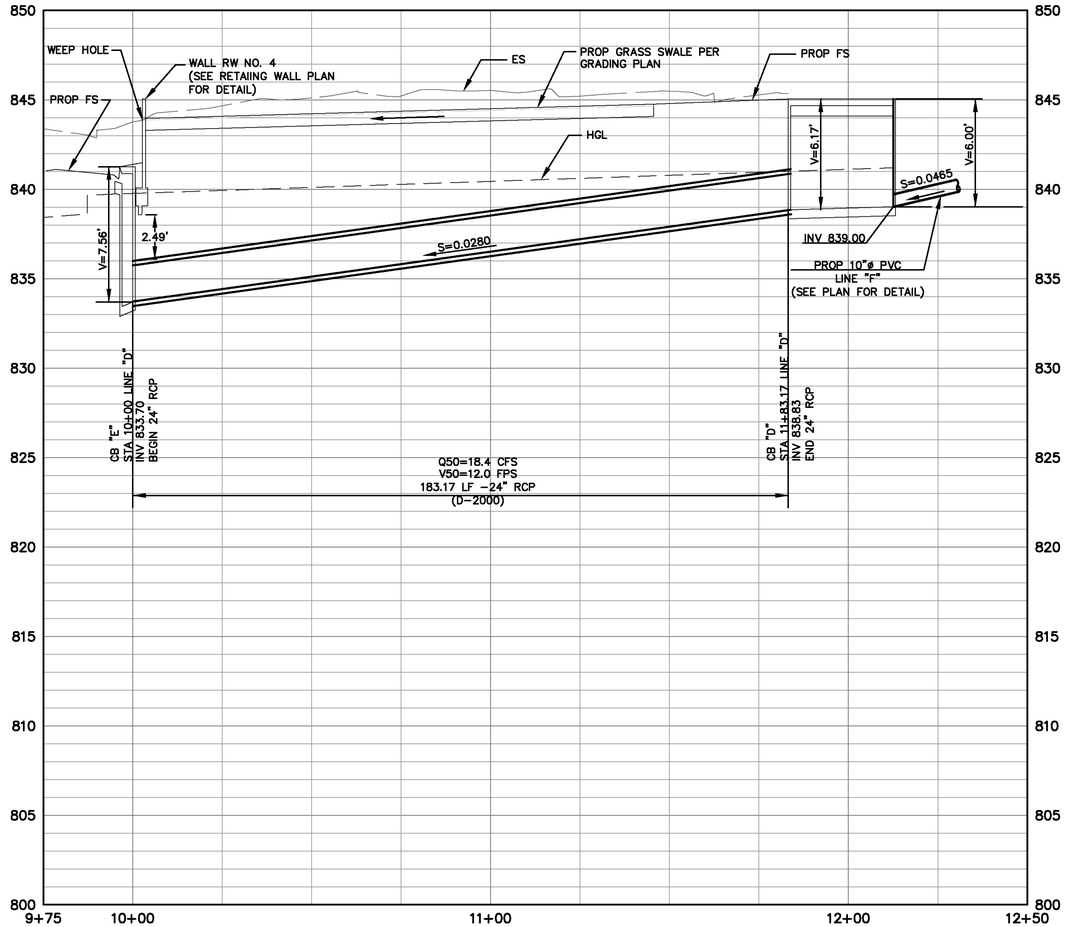

LINE "D"

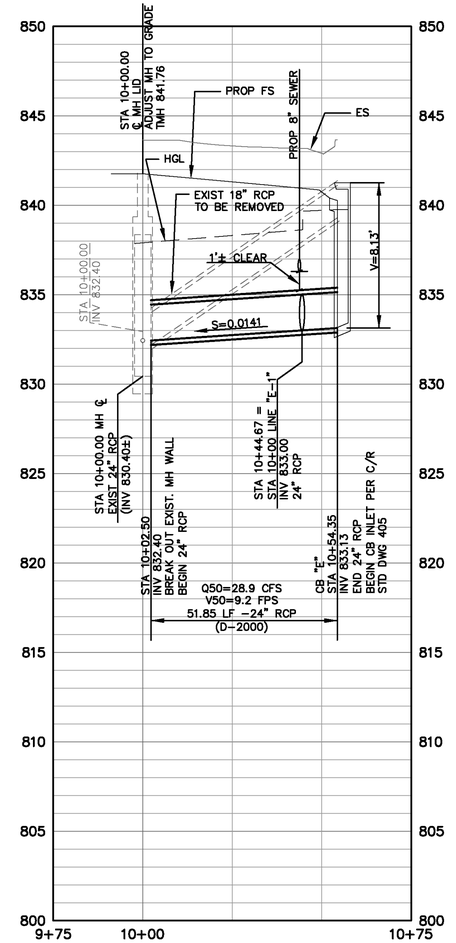

LINE "E"

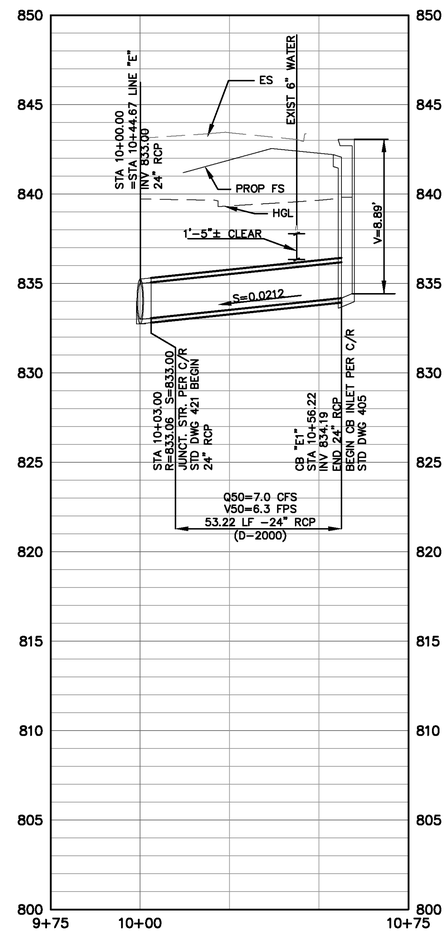

LINE "E1"

ASBUILT

BID NO. 7185

COMPLETION DATE 03/25/2016

R.E. NAME DAVID HATCH

UPRR BRIDGE 55.54 LOS ANGELES SUB

HORZ. SCALE: 1" = 20'
VERT. SCALE: 1" = 4'

DIGALERT
DIAL TOLL FREE
1-800-422-4133
AT LEAST TWO DAYS BEFORE YOU DIG
UNDERGROUND SERVICE ALERT OF SOUTHERN CALIFORNIA

MOFFATT & NICHOL
3780 KILROY AIRPORT WAY, SUITE 600
LONG BEACH, CALIFORNIA, 90806
562-426-9551

DATE _____

REGISTERED PROFESSIONAL ENGINEER
M.S. NICHOL
NO. C60129
EXP. 06/30/14
CIVIL
STATE OF CALIFORNIA

MARK	REVISIONS	APPR.	DATE

DESIGNED BY RW DRAWN BY TP CHECKED BY MSN

CITY OF RIVERSIDE, CALIFORNIA
PUBLIC WORKS DEPARTMENT

ACCT. NO. -
W.O. NO. -

RIVERSIDE AVE UNDERPASS

D-866

DRAINAGE PROFILES, LINES "D", "E", "E1" D-9

SHEET 53 OF 146

HORIZ. SCALE: AS SHOWN VERT. SCALE: AS SHOWN

FILE NO.

DRAWING NAME: \\ntoppb02\lb_projects\8318 lb13\CADD\Sheet\STORM DRAIN\6355010009.dwg
PLOT DATE: Sep 27, 2016 - 9:24am PLOTTED BY: dleigh

PUMP STATION, SEE DWG PS-5

PUMP STATION PIPING, SEE DWG PS-6

UPPR

ELECTRICAL LAYOUT, SEE DWG PS-7

ALLEY

DETENTION BASIN, SEE DWG PS-2

TIPPERARY WAY

RIVERSIDE AVENUE

28

27

26

11

10

15

4

PLAN
SCALE: 1"=20'

ASBUILT

BID NO. 7185

COMPLETION DATE 03/25/2016

R.E. NAME DAVID HATCH

20' 0' 20' 40'

SCALE: 1"=20'

UPRR BRIDGE 55.54 LOS ANGELES SUB

DIGALERT
DIAL TOLL FREE
1-800-422-4133
AT LEAST TWO DAYS BEFORE YOU DIG
UNDERGROUND SERVICE ALERT OF SOUTHERN CALIFORNIA

MOFFATT & NICHOL
3780 KILROY AIRPORT WAY, SUITE 600
LONG BEACH, CALIFORNIA, 90806
562-426-9551

DATE

REGISTERED PROFESSIONAL ENGINEER
DENNIS JOHN DRAG
NO. C26517
EXP. 3/31/14
CIVIL
STATE OF CALIFORNIA

MARK	REVISIONS	APPR.	DATE

DESIGNED BY RW DRAWN BY TP CHECKED BY MSN

CITY OF RIVERSIDE, CALIFORNIA
PUBLIC WORKS DEPARTMENT

RIVERSIDE AVE UNDERPASS

PUMP STATION & DETENTION BASIN SITE PLAN PS-1

HORIZ. SCALE: AS SHOWN VERT. SCALE: AS SHOWN

ACCT. NO. -
W.O. NO. -

D-866

SHEET 54 OF 146

FILE NO.

DRAWING NAME: \\netapp1b02\lb_projects\6318 lb13\CADD\Sheet\PUMP STATION\635501PS001.dwg
PLOT DATE: Sep 27, 2016 - 9:25am PLOTTED BY: dergh

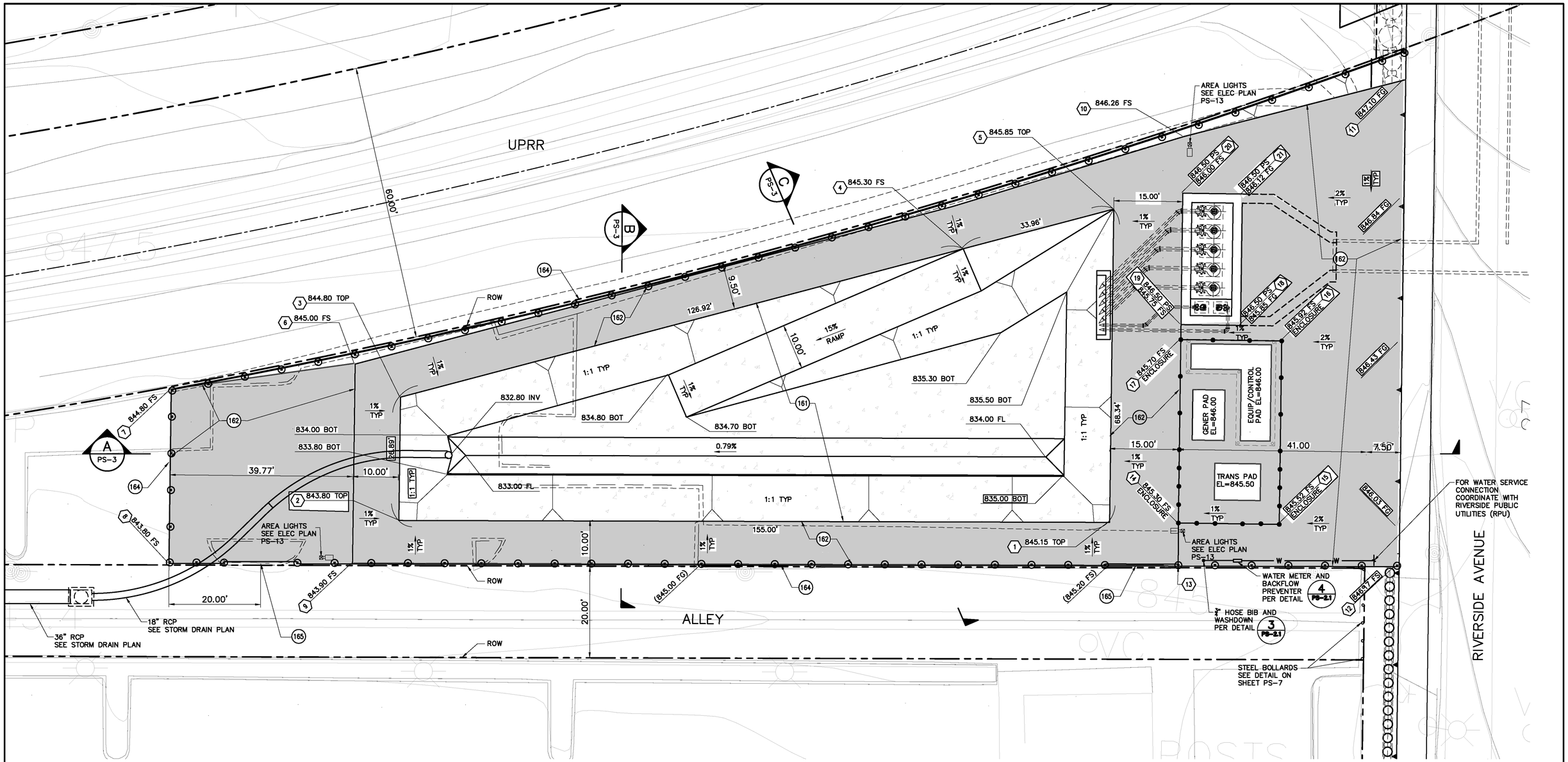

CONTROL POINTS		
⟨⟩	NORTHING	EASTING
⟨1⟩	2293826.16	6216494.20
⟨2⟩	2293826.59	6216338.21
⟨3⟩	2293853.49	6216338.57
⟨4⟩	2293885.85	6216461.28
⟨5⟩	2293894.51	6216494.13
⟨6⟩	2293860.70	6216328.66
⟨7⟩	2293855.09	6216288.58
⟨8⟩	2293817.23	6216288.07
⟨9⟩	2293817.13	6216328.08
⟨10⟩	2293910.29	6216509.34
⟨11⟩	2293922.64	6216557.51
⟨12⟩	2293816.50	6216555.59
⟨13⟩	2293816.48	6216508.41
⟨14⟩	2293825.97	6216508.21
⟨15⟩	2293825.68	6216530.21
⟨16⟩	2293865.67	6216530.74
⟨17⟩	2293865.97	6216508.75
⟨18⟩	2293869.81	6216520.46
⟨19⟩	2293869.97	6216508.80
⟨20⟩	2293897.30	6216509.16
⟨21⟩	2293897.14	6216520.82

DETENTION BASIN PLAN
SCALE: 1"=10'

ASBUILT
BID NO. 7185
COMPLETION DATE 03/25/2016
R.E. NAME DAVID HATCH

CONSTRUCTION NOTES
(161) CONSTRUCT REINFORCED CONCRETE DETENTION BASIN
(162) CONSTRUCT 4" C2-PG, 64-10 AC OVER COMPACTED NATIVE SOIL
(164) CONSTRUCT STEEL FENCE PER DETAIL 2 PS-2.1
(165) CONSTRUCT 16' WIDE GATE PER DETAIL 1 PS-2.1

CONSTRUCTION NOTES
AC PAVEMENT
PCC PAVEMENT

10' 0' 10' 20'
SCALE: 1"=10'

DIGALERT
DIAL TOLL FREE 1-800-422-4133
AT LEAST TWO DAYS BEFORE YOU DIG
UNDERGROUND SERVICE ALERT OF SOUTHERN CALIFORNIA

MOFFATT & NICHOL
3780 KILROY AIRPORT WAY, SUITE 600
LONG BEACH, CALIFORNIA, 90806
562-426-9551
DATE

REGISTERED PROFESSIONAL ENGINEER
M.S. NICHOL
NO. C60129
EXP. 06/30/14
CIVIL
STATE OF CALIFORNIA

MARK	REVISIONS	APPR.	DATE

DESIGNED BY RW DRAWN BY TP CHECKED BY MSN

UPRR BRIDGE 55.54 LOS ANGELES SUB

CITY OF RIVERSIDE, CALIFORNIA
PUBLIC WORKS DEPARTMENT

RIVERSIDE AVE UNDERPASS

DETENTION BASIN GRADING PLAN PS-2

HORIZ. SCALE: AS SHOWN VERT. SCALE: AS SHOWN

ACCT. NO. -
W.O. NO. -

D-866

SHEET 55 OF 146

FILE NO.

DRAWING NAME: \\netapp1b02\b_projects\8318 (b13)\CADD\Sheet\PUMP STATION\635501PS002.dwg
PLOT DATE: Sep 27, 2016 - 9:25am PLOTTED BY: dleigh

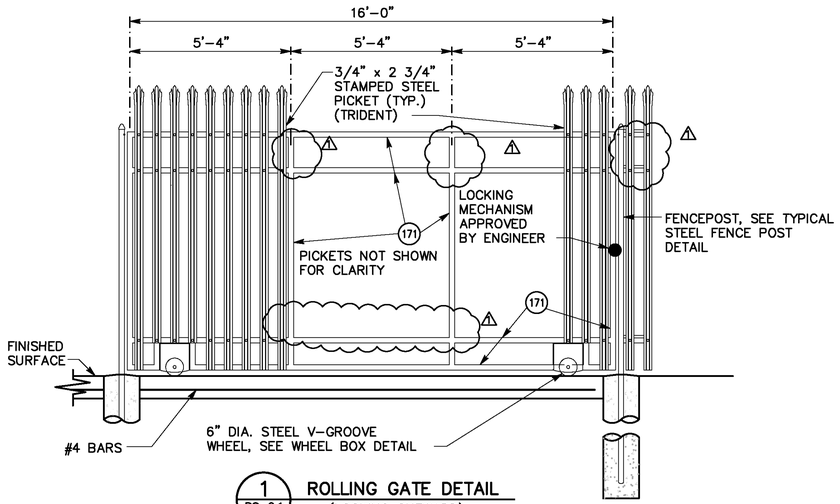

1 PS-2.1 **ROLLING GATE DETAIL**
(LOOKING OUTWARD)
SCALE 1/2" = 1'-0"

NOTE: ROLLING GATE DETAIL SHOWN IS FOR OVERALL DIMENSIONS AND APPEARANCE. THE CONTRACTOR SHALL SUBMIT SHOP DRAWINGS SHOWING ALL DIMENSIONS, MATERIALS AND HARDWARE FOR APPROVAL BY THE ENGINEER.

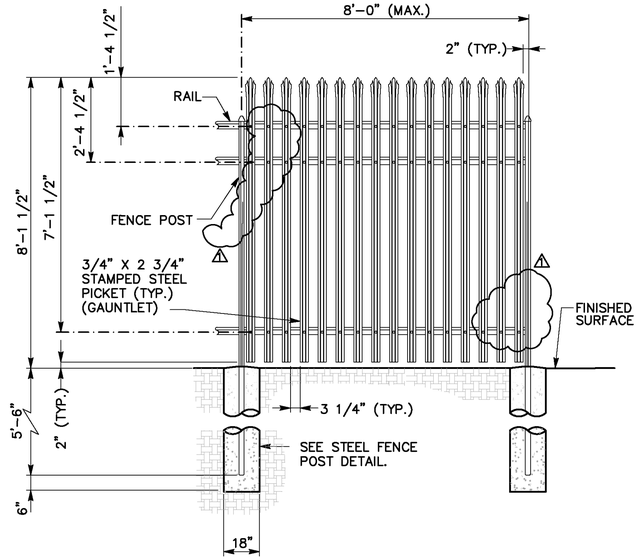

2 PS-2.1 **STEEL FENCE DETAIL**
SCALE 1/2" = 1'-0"

CONSTRUCTION NOTES

170 NOT USED

171 INSTALL 1 3/4" SQUARE STEEL TUBE, 11 GA.

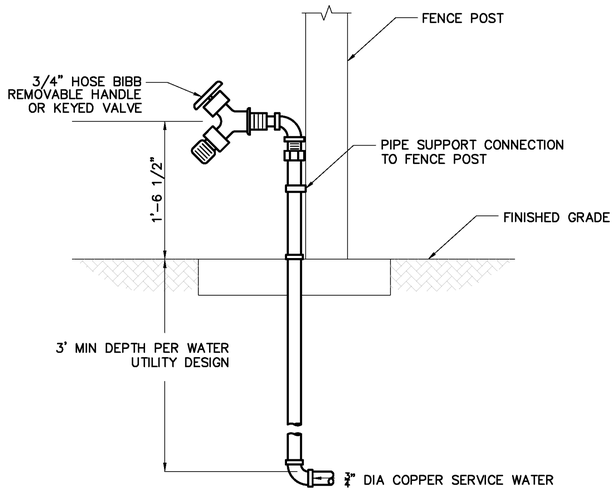

3 PS-2.1 **HOSE BIB & WASHDOWN**
SCALE: NTS

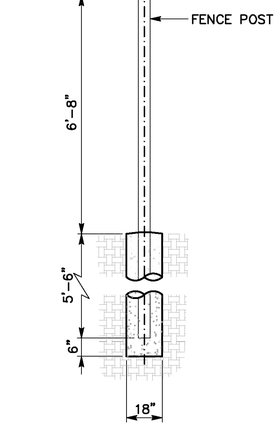

TYPICAL STEEL FENCE POST DETAIL
SCALE 1/2" = 1'-0"

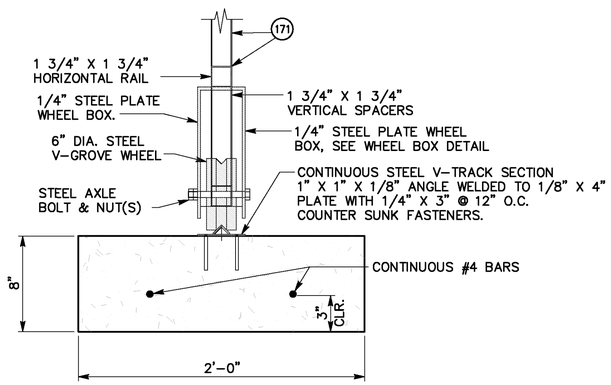

V-GROOVE WHEEL DETAIL
SCALE 2" = 1'-0"

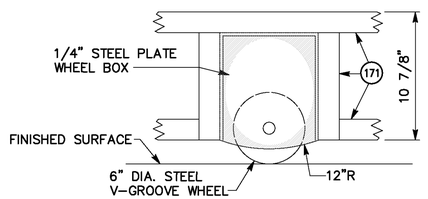

WHEEL BOX DETAIL
SCALE 2" = 1'-0"

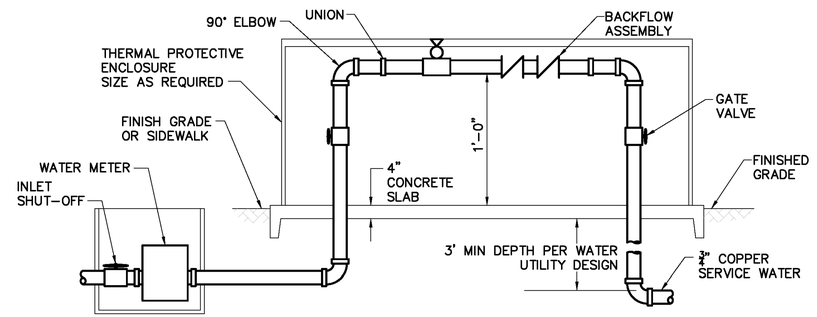

4 PS-2.1 **WATER METER AND BACKFLOW PREVENTER**
SCALE: NTS

ASBUILT

BID NO. 7185

COMPLETION DATE 03/25/2016

R.E. NAME DAVID HATCH

2' 0' 2' 4'
SCALE: 1"=2'

DIGALERT
DIAL TOLL FREE
1-800-422-4133
AT LEAST TWO DAYS BEFORE YOU DIG
UNDERGROUND SERVICE ALERT OF SOUTHERN CALIFORNIA

MOFFATT & NICHOL
3780 KILROY AIRPORT WAY, SUITE 600
LONG BEACH, CALIFORNIA, 90806
562-426-9551

DATE

REGISTERED PROFESSIONAL ENGINEER
M.S. NICHOL
NO. C60129
EXP. 06/30/14
CIVIL
STATE OF CALIFORNIA

MARK	REVISIONS	APPR.	DATE
1	ELIMINATED PERFORATED STEEL PANEL	RW	10/24/13

DESIGNED BY RW DRAWN BY TP CHECKED BY MSN

UPRR BRIDGE 55.54 LOS ANGELES SUB

CITY OF RIVERSIDE, CALIFORNIA
PUBLIC WORKS DEPARTMENT

RIVERSIDE AVE UNDERPASS

PUMP STATION DETAILS PS-2.1

HORIZ. SCALE: AS SHOWN VERT. SCALE: AS SHOWN

ACCT. NO. -
W.O. NO. -

D-866

SHEET 56 OF 146

FILE NO.

DRAWING NAME: \\ntcopib02\ib_projects\838 ib13\CADD\Sheet\PUMP STATION\635501PS0021.dwg
PLOT DATE: Sep 27, 2016 - 9:25am PLOTTED BY: dhigh

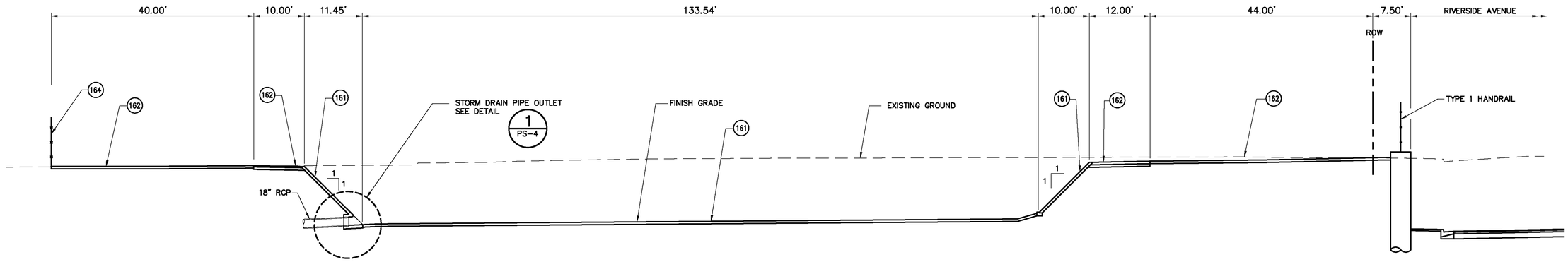

A PS-2 **SECTION**
SCALE: 1"=10'

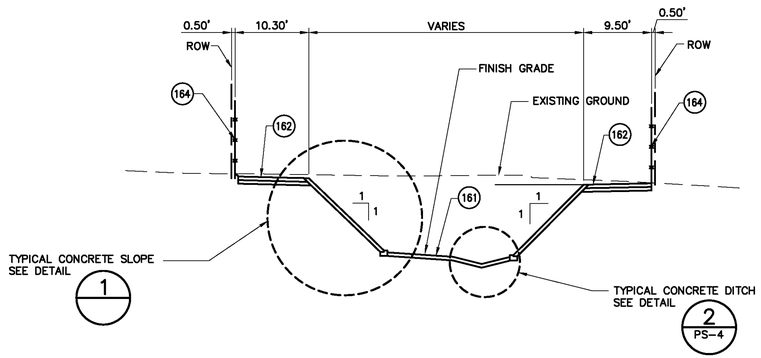

B PS-2 **SECTION**
SCALE: 1"=10'

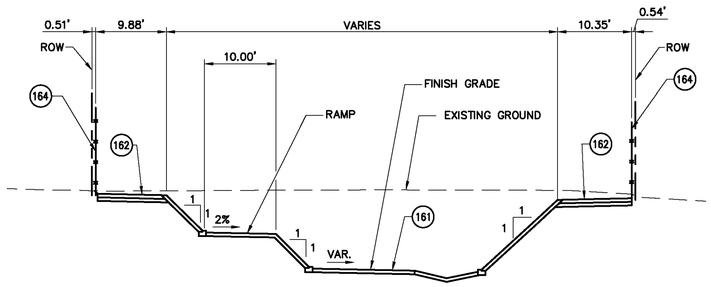

C PS-2 **SECTION**
SCALE: 1"=10'

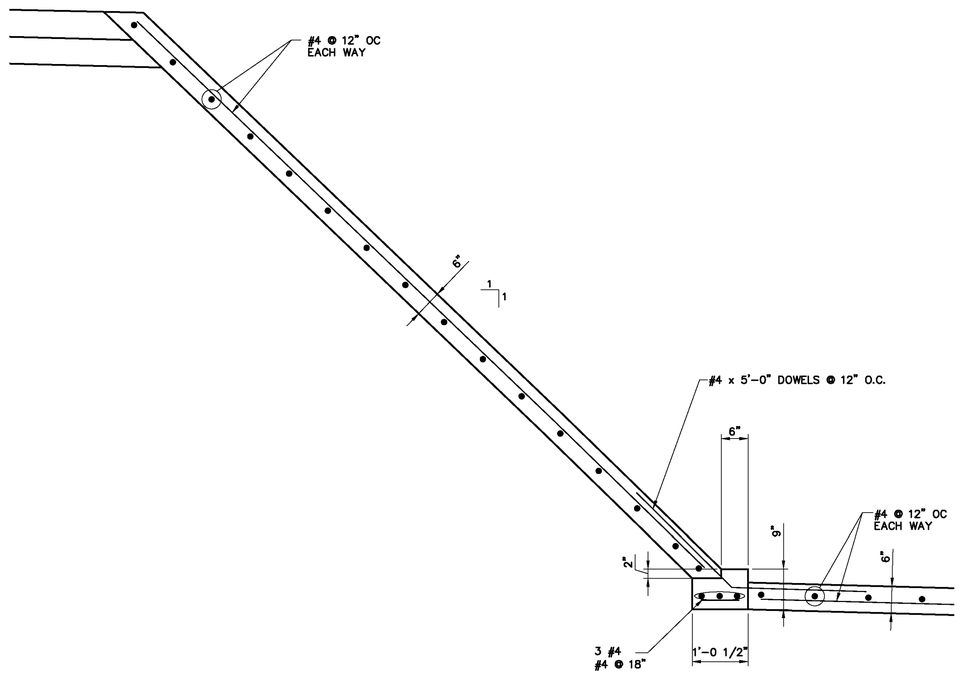

1 **DETAIL**
SCALE: 3/4"=1'

CONSTRUCTION NOTES

(161) CONSTRUCT REINFORCED CONCRETE DETENTION BASIN

(162) CONSTRUCT 4" C2-PG, 64-10 AC OVER COMPACTED NATIVE SOIL

(164) CONSTRUCT STEEL FENCE PER DETAIL 2/PS-2.1

ASBUILT

BID NO. 7185

COMPLETION DATE 03/25/2016

R.E. NAME DAVID HATCH

2' 0' 2' 4'
SCALE: 1"=2'

10' 0' 10' 20'
SCALE: 1"=10'

DIGALERT
DIAL TOLL FREE
1-800-422-4133
AT LEAST TWO DAYS BEFORE YOU DIG
UNDERGROUND SERVICE ALERT OF SOUTHERN CALIFORNIA

MOFFATT & NICHOL
3780 KILROY AIRPORT WAY, SUITE 600
LONG BEACH, CALIFORNIA, 90806
562-426-9551

DATE

REGISTERED PROFESSIONAL ENGINEER
M.S. NICHOL
NO. C60129
EXP. 06/30/14
CIVIL
STATE OF CALIFORNIA

MARK	REVISIONS	APPR.	DATE

DESIGNED BY RW DRAWN BY TP CHECKED BY MSN

UPRR BRIDGE 55.54 LOS ANGELES SUB

CITY OF RIVERSIDE, CALIFORNIA
PUBLIC WORKS DEPARTMENT

RIVERSIDE AVE UNDERPASS

DETENTION BASIN SECTIONS PS-3

HORIZ. SCALE: AS SHOWN VERT. SCALE: AS SHOWN

ACCT. NO. -
W.O. NO. -

D-866

SHEET 57 OF 146

FILE NO.

DRAWING NAME: \\netapp1b02\lb_projects\8318 lb13\CADD\Sheet\PUMP STATION\635501PS003.dwg
PLOT DATE: Sep 27, 2016 - 9:25am PLOTTED BY: dleigh

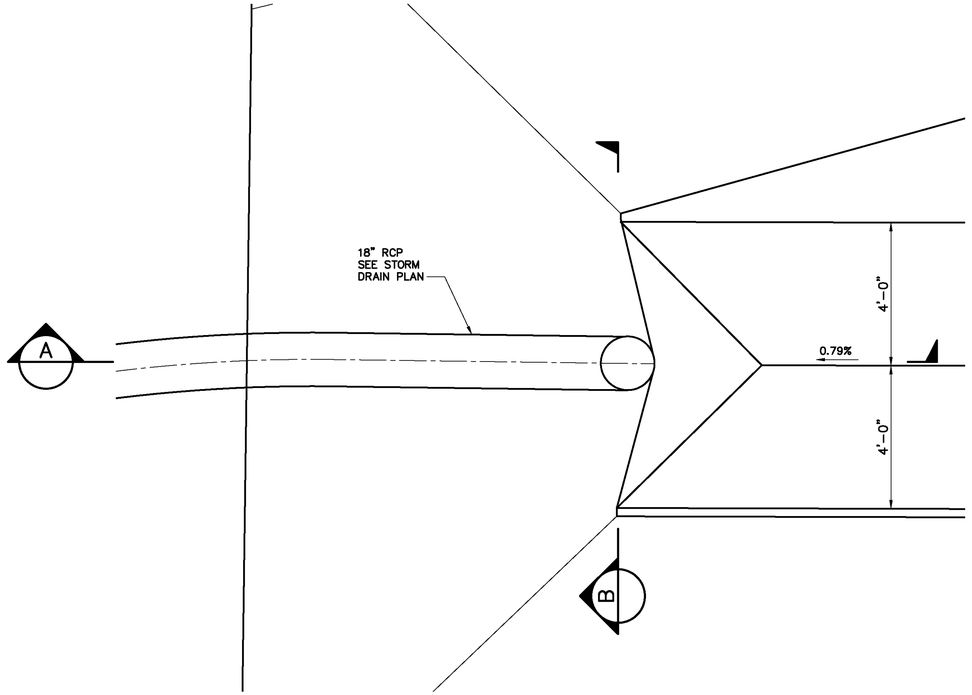

1 PS-3 **DETAIL**
SCALE: 1"=2'

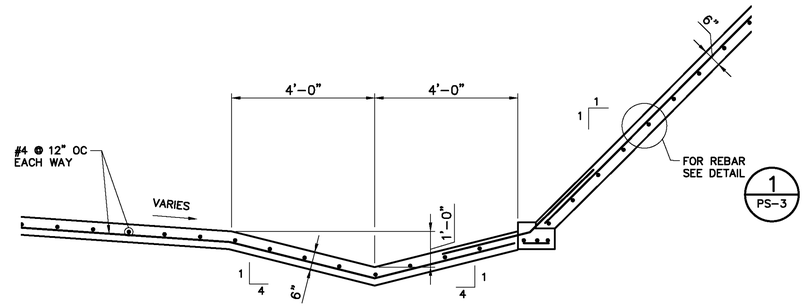

2 PS-3 **DETAIL**
SCALE: 1"=2'

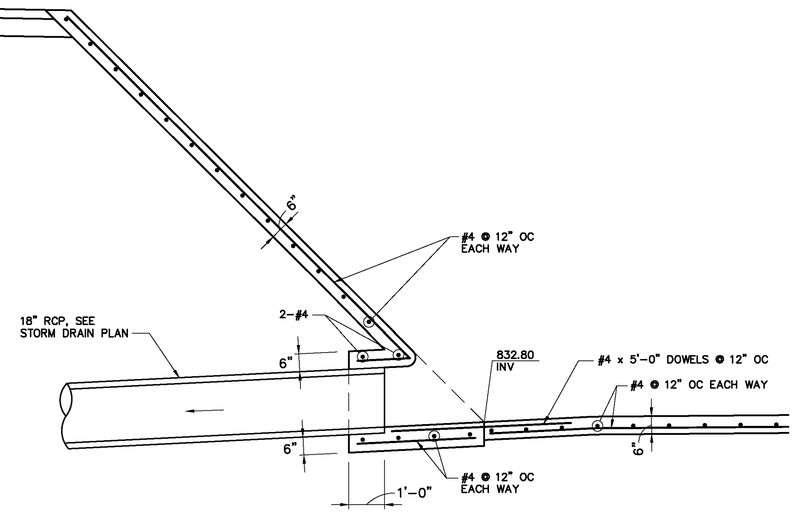

A **SECTION**
SCALE: 1"=2'

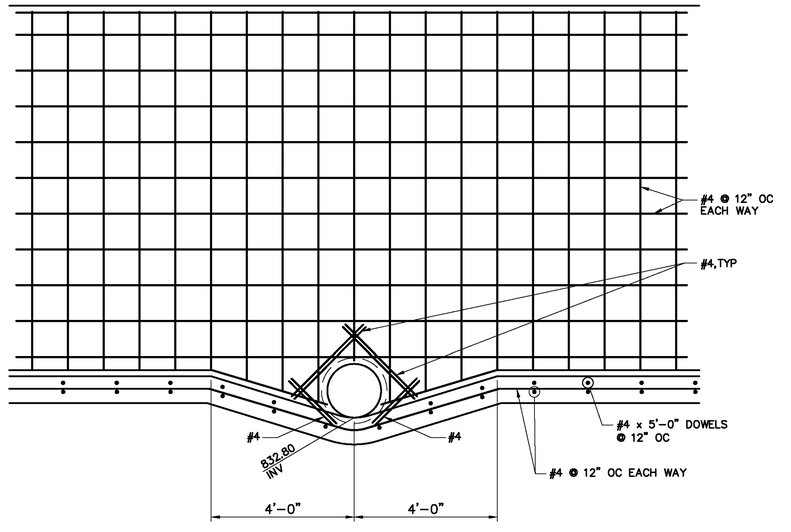

B **SECTION**
SCALE: 1"=2'

ASBUILT

BID NO. 7185
COMPLETION DATE 03/25/2016
R.E. NAME DAVID HATCH

10' 0' 10' 20'
SCALE: 1"=10'

DIGALERT
DIAL TOLL FREE
1-800-422-4133
AT LEAST TWO DAYS BEFORE YOU DIG
UNDERGROUND SERVICE ALERT OF SOUTHERN CALIFORNIA

MOFFATT & NICHOL
3780 KILROY AIRPORT WAY, SUITE 600
LONG BEACH, CALIFORNIA, 90806
562-426-9551

DATE

REGISTERED PROFESSIONAL ENGINEER
M.S. NICHOL
NO. C60129
EXP. 06/30/14
CIVIL
STATE OF CALIFORNIA

MARK	REVISIONS	APPR.	DATE

DESIGNED BY RW DRAWN BY TP CHECKED BY MSN

UPRR BRIDGE 55.54 LOS ANGELES SUB

CITY OF RIVERSIDE, CALIFORNIA
PUBLIC WORKS DEPARTMENT

RIVERSIDE AVE UNDERPASS

DETENTION BASIN DETAILS PS-4

HORIZ. SCALE: AS SHOWN VERT. SCALE: AS SHOWN

ACCT. NO. -
W.O. NO. -

D-866

SHEET 58 OF 146

FILE NO.

DRAWING NAME: \\retroplot02\lb_projects\6318 its13\CADD\Sheet\PUMP STATION\635501PS004.dwg
PLOT DATE: Sep 27, 2016 - 9:25am PLOTTED BY: dleigh

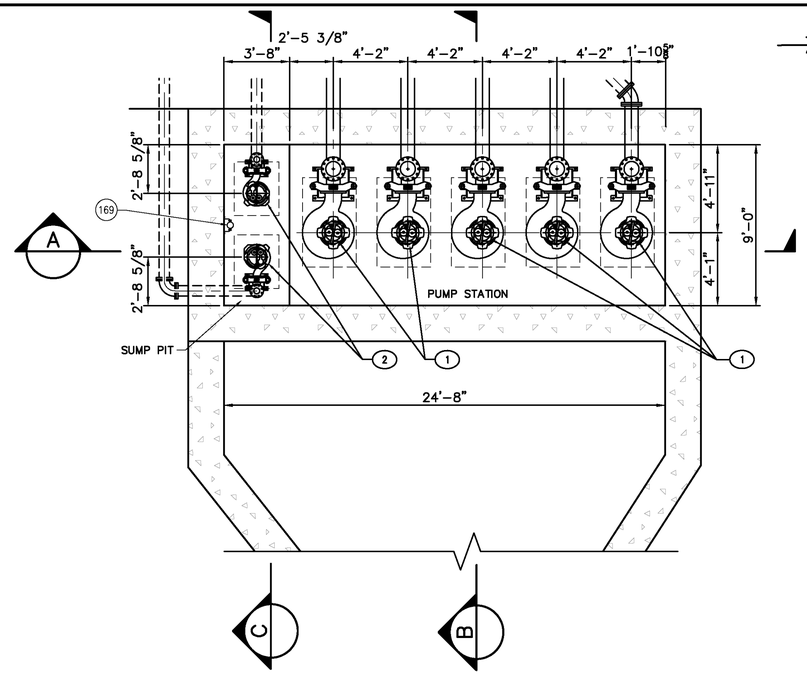

PUMP STATION PLAN
SCALE: 1/4"=1'-0"

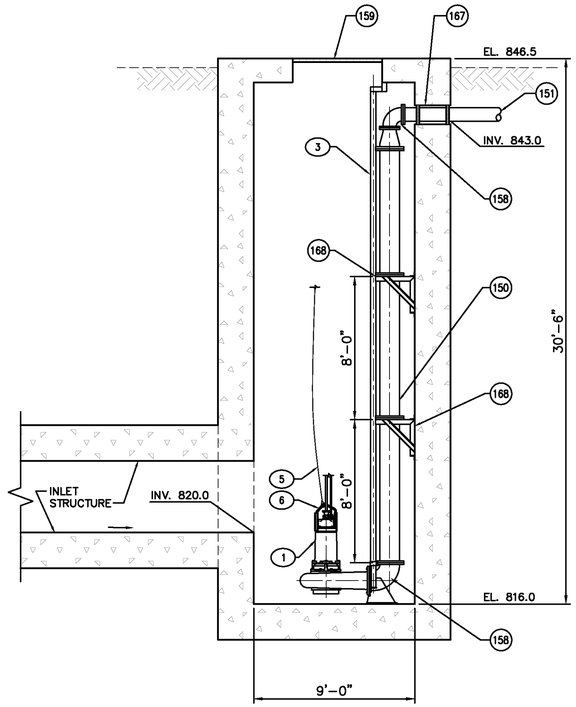

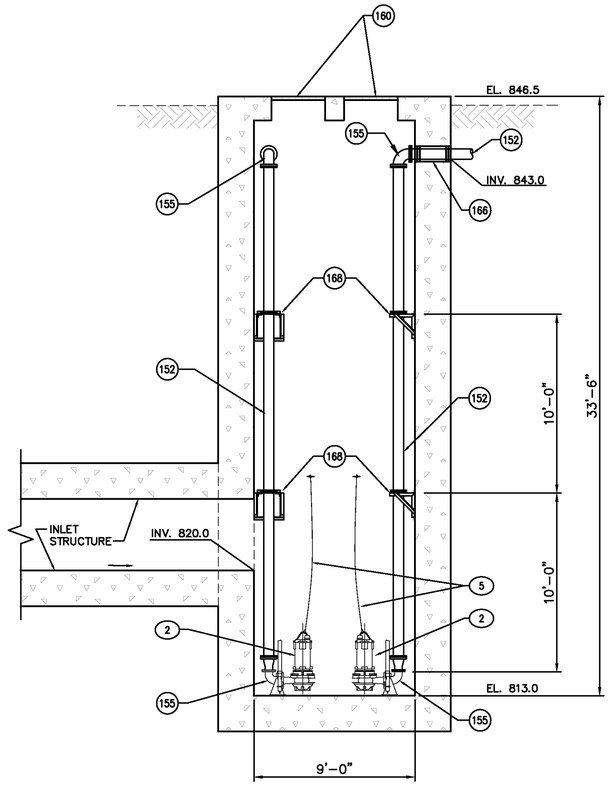

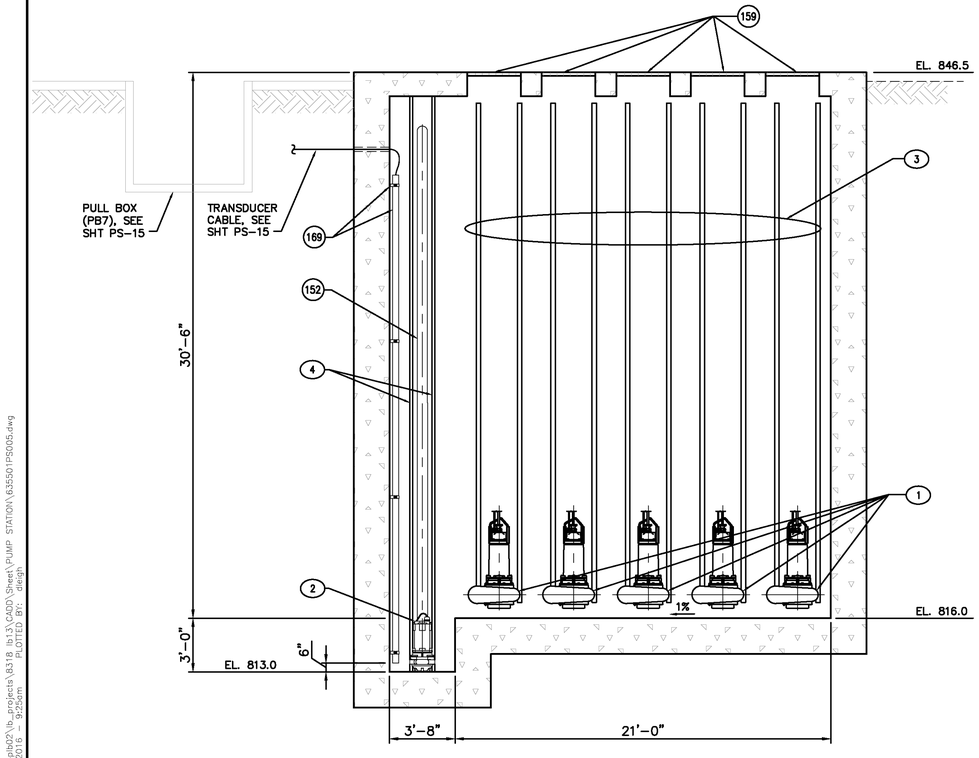

A SECTION
SCALE: 1/4"=1'-0"

CONSTRUCTION NOTES

(150) CONSTRUCT 12" DIP

(151) CONSTRUCT 8" DIP

(152) CONSTRUCT 6" DIP

(155) CONSTRUCT 6"X90° DIP FLANGED BEND

(158) CONSTRUCT 12"X90° DIP FLANGED BEND

(159) CONSTRUCT 3'X5' BILCO DOUBLE LEAF HATCHES WITH OSHA COMPLIANT FALL PROTECTION GRATING, OR APPROVED EQUAL

(160) CONSTRUCT 2.5'X3.0' BILCO DOUBLE LEAF HATCHES WITH OSHA COMPLIANT FALL PROTECTION GRATING, OR APPROVED EQUAL

(166) INSTALL LINK SEAL, LS-475-S316, CS-10-24, OR APPROVED EQUAL

(167) INSTALL LINK SEAL, LS-400-S316, CS-12-24, OR APPROVED EQUAL

(168) CONSTRUCT PIPE SUPPORT, SEE DETAIL (1)

(169) CONSTRUCT 4"ø PVC STILL WELL WITH STAINLESS STEEL TOLCO FIG 7 OFFSET PIPE CLAMP SUPPORTS

PUMP EQUIPMENT

(1) 12" SUBMERSIBLE PUMP – 54 HP

(2) 4" SUBMERSIBLE PUMP – 27 HP

(3) SLIDE RAIL ASSEMBLY, 304/316 STAINLESS STL. SCH 40 PIPE. INCLUDE MOUNTING HARDWARE AND SPLICE KIT AS REQUIRED.

(4) SLIDE RAIL ASSEMBLY, 304/316 STAINLESS STEEL SCH 40 PIPE. INCLUDE MOUNTING HARDWARE AND SPLICE KIT AS REQUIRED.

(5) LIFTING CABLE, STAINLESS STEEL NYLON COVERED, 2500 LB. TENSILE STRENGTH. CONTRACTOR TO FIELD VERIFY LAYOUT AND DIMENSIONING.

(6) PUMP LIFTING BAIL, STAINLESS STEEL.

B SECTION
SCALE: 1/4"=1'-0"

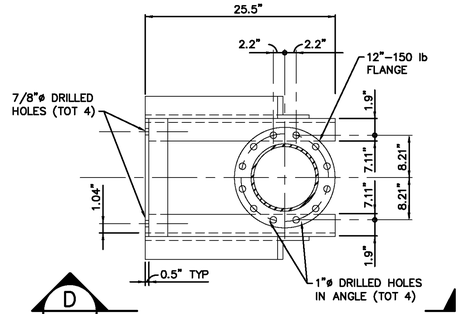

C SECTION
SCALE: 1/4"=1'-0"

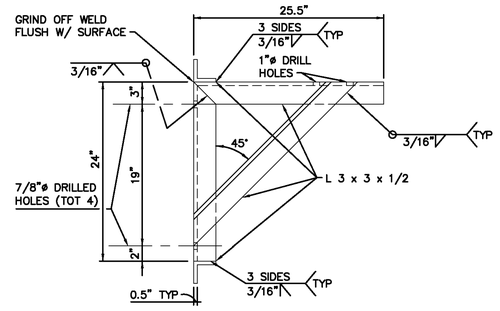

D SECTION
NOT TO SCALE

NOTE: PIPE SUPPORT SHOWN IS FOR THE 12" DISCHARGE LINES OF THE LARGE PUMPS. SUPPORTS FOR 6" DISCHARGE LINES ARE SIMILAR, USING L 2 x 2 x 1/4.

1 PIPE SUPPORT DETAIL
NOT TO SCALE

40' 0' 40' 80'
SCALE: 1"=40'

ASBUILT

BID NO. 7185

COMPLETION DATE 03/25/2016

R.E. NAME DAVID HATCH

DIGALERT
DIAL TOLL FREE
1-800-422-4133
AT LEAST TWO DAYS BEFORE YOU DIG
UNDERGROUND SERVICE ALERT OF SOUTHERN CALIFORNIA

MOFFATT & NICHOL
3780 KILROY AIRPORT WAY, SUITE 600
LONG BEACH, CALIFORNIA, 90806
562-426-9551

DATE

REGISTERED PROFESSIONAL ENGINEER
M.S. NICHOL
NO. C60129
EXP. 06/30/14
CIVIL
STATE OF CALIFORNIA

MARK	REVISIONS	APPR.	DATE

DESIGNED BY RW DRAWN BY TP CHECKED BY MSN

UPRR BRIDGE 55.54 LOS ANGELES SUB

CITY OF RIVERSIDE, CALIFORNIA
PUBLIC WORKS DEPARTMENT

RIVERSIDE AVE UNDERPASS

PUMP STATION PLAN & DETAIL PS-5

HORIZ. SCALE: AS SHOWN VERT. SCALE: AS SHOWN

ACCT. NO. –
W.O. NO. –

D-866

SHEET 59 OF 146

FILE NO.

DRAWING NAME: \\netapp1b02\lb_projects\8318_lb13\CADD\Sheet\PUMP STATION\635501PS005.dwg
PLOT DATE: Sep 27, 2016 - 9:25am PLOTTED BY: dreigh

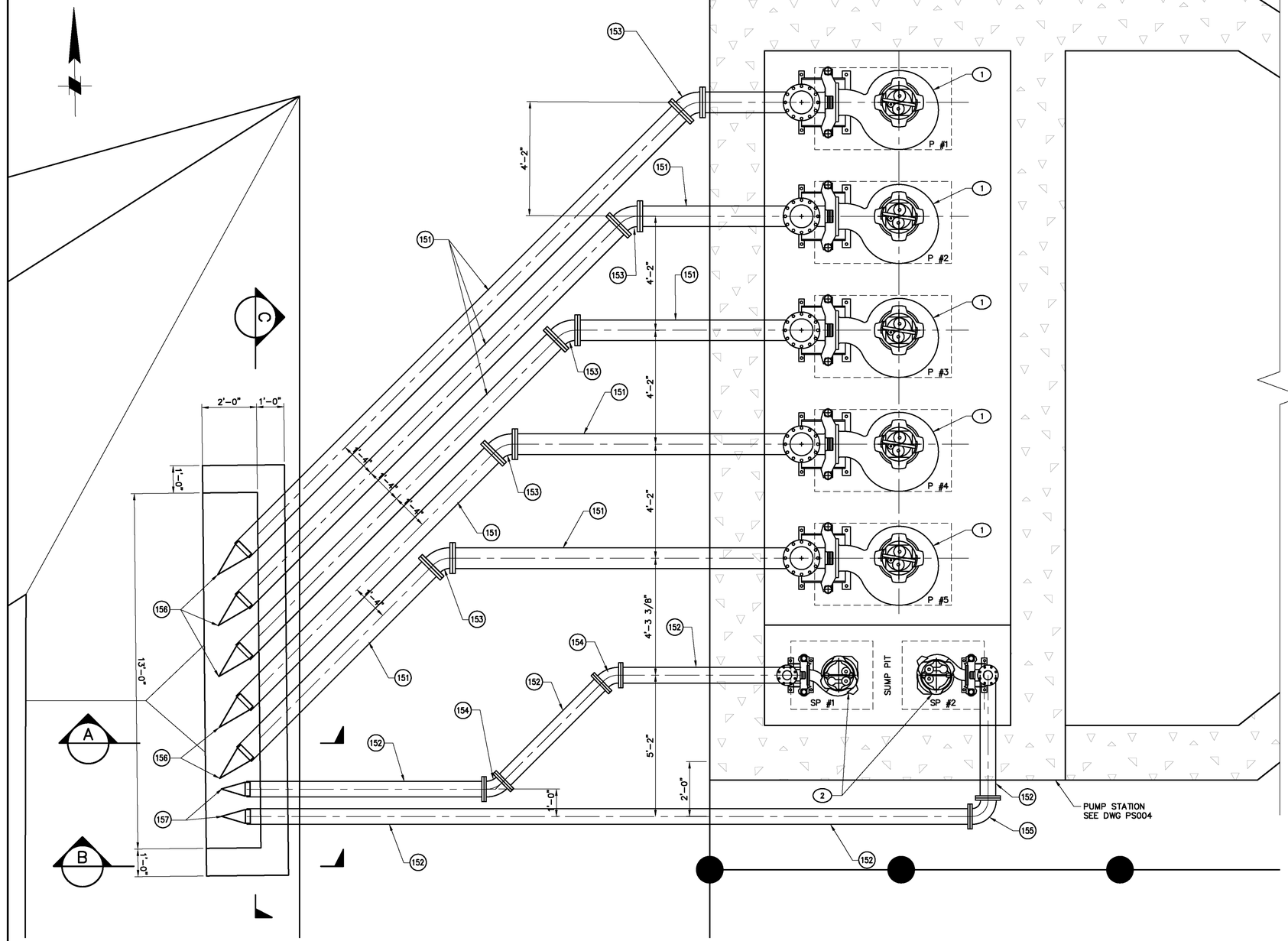

PLAN
SCALE: 1"=2'

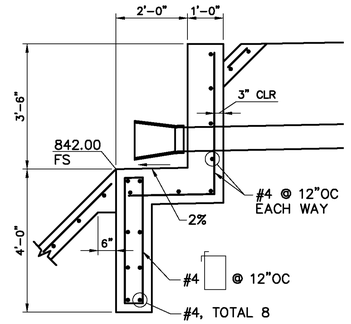

A SECTION
SCALE: 1"=2'

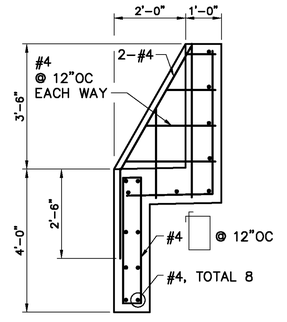

B SECTION
SCALE: 1"=2'

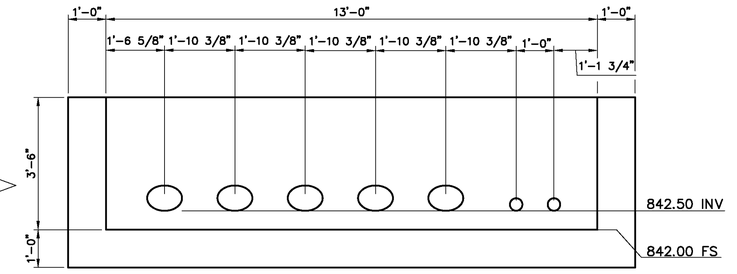

C SECTION
SCALE: 1"=2'

PUMPING EQUIPMENT SCHEDULE

PUMP NO.	DESCRIPTION	CAPACITY GPM	TDH DESIGN FEET	RPM PUMP	PUMP BHP	ELECTRIC MOTOR DATA	DRY WEIGH LBS
P–1	GORMAN–RUPP (REP CEC) JS12AB–E54–1 OR APPROVED EQUAL SUBMERSIBLE SLIDE RAIL MOUNTED 5.71" SPHERICAL SOLIDS CAPACITY	3,700	36	870	–	54HP, 460V, 3PH, 60HZ	1.786 (PUMP ONLY)
P–2		3,700	36	870	–	54HP, 460V, 3PH, 60HZ	1.786 (PUMP ONLY)
P–3		3,700	36	870	–	54HP, 460V, 3PH, 60HZ	1.786 (PUMP ONLY)
P–4		3,700	36	870	–	54HP, 460V, 3PH, 60HZ	1.786 (PUMP ONLY)
P–5		3,700	36	870	–	54HP, 460V, 3PH, 60HZ	1.786 (PUMP ONLY)
S–1	GORMAN–RUPP (REP CEC) JS4J60–E27 OR APPROVED EQUAL SUBMERSIBLE SLIDE RAIL MOUNTED 3.15" SPHERICAL SOLIDS CAPACITY	1,200	35	1,750	–	27HP, 460V, 3PH, 60HZ	493 (PUMP ONLY)
S–2		1,200	35	1,750	–	27HP, 460V, 3PH, 60HZ	493 (PUMP ONLY)

PUMP OPERATING SEQUENCE/ELEVATIONS

PUMP NO.	PUMP OPERATION	
	START (ELEVATION IN WET WELL – FEET)	STOP (ELEVATION IN WET WELL – FEET)
LOW WATER ALARM/MAIN PUMPS CUTOFF	818.40	
P–1	820.00	818.50
P–2	820.50	819.00
P–3	821.00	820.00
P–4	822.00	821.00
P–5	823.00	822.00
HIGH WATER ALARM	823.00	
S–1	818.00	816.00
S–2	SP'S ALTERNATE OPERATION	

NOTE: PLC ROTATES THE OPERATING OF THE MAIN PUMPS TO EQUALIZE WEAR AND USAGE.

CONSTRUCTION NOTES

(151) CONSTRUCT 8" DIP
(152) CONSTRUCT 6" DIP
(153) CONSTRUCT 8"X45° DIP FLANGED BEND
(154) CONSTRUCT 6"X45° DIP FLANGED BEND
(155) CONSTRUCT 6"X90° DIP FLANGED BEND
(156) FURNISH AND INSTALL 8" SERIES TF–2 TIDEFLEX CHECK VALVE, BY TIDEFLEX TECHNOLOGIES OR APPROVED EQUAL
(157) FURNISH AND INSTALL 6" SERIES TF–2 TIDEFLEX CHECK VALVE, BY TIDEFLEX TECHNOLOGIES OR APPROVED EQUAL

PUMP EQUIPMENT BY GORMAN RUPP OR APPROVED EQUAL

(1) 12" SUBMERSIBLE PUMP – 54 HP
(2) 4" SUBMERSIBLE PUMP – 27 HP

ASBUILT

BID NO. 7185
COMPLETION DATE 03/25/2016
R.E. NAME DAVID HATCH

40' 0' 40' 80'
SCALE: 1"=40'

DIGALERT
DIAL TOLL FREE
1-800-422-4133
AT LEAST TWO DAYS BEFORE YOU DIG
UNDERGROUND SERVICE ALERT OF SOUTHERN CALIFORNIA

MOFFATT & NICHOL
3780 KILROY AIRPORT WAY, SUITE 600
LONG BEACH, CALIFORNIA, 90806
562–426–9551

DATE

REGISTERED PROFESSIONAL ENGINEER
W.S. Nichol
M.S. NICHOL
NO. C60129
EXP. 06/30/14
CIVIL
STATE OF CALIFORNIA

MARK	REVISIONS	APPR.	DATE

DESIGNED BY RW DRAWN BY TP CHECKED BY MSN

UPRR BRIDGE 55.54 LOS ANGELES SUB

CITY OF RIVERSIDE, CALIFORNIA
PUBLIC WORKS DEPARTMENT

RIVERSIDE AVE UNDERPASS

PUMP STATION PIPING PLAN PS–6

ACCT. NO. –
W.O. NO. –

D–866

SHEET 60 OF 146

HORIZ. SCALE: AS SHOWN VERT. SCALE: AS SHOWN

FILE NO.

DRAWING NAME: \\netapp1b02\ib_projects\8318 ib13\CADD\Sheet\PUMP STATION\635501PS006.dwg
PLOT DATE: Sep 27, 2016 - 9:25am PLOTTED BY: dleigh

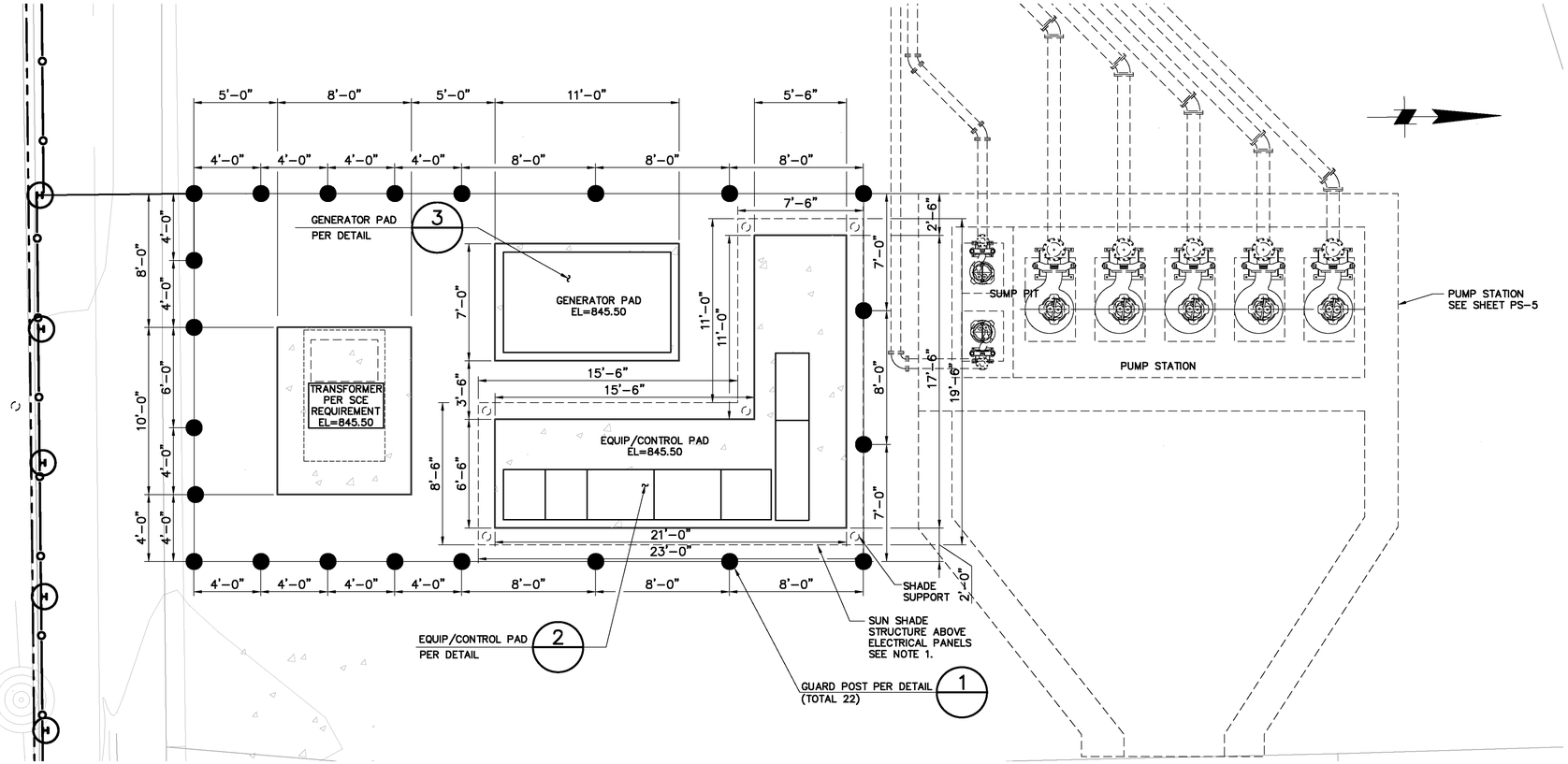

ELECTRICAL LAYOUT PLAN

SCALE: 1/4"=1'-0"

NOTE:

1. PROVIDE CONTROL PANEL SHADE. THE CONTRACTOR SHALL SUBMIT MATERIAL AND CONNECTION DETAILS TO THE ENGINEER FOR REVIEW AND APPROVAL.

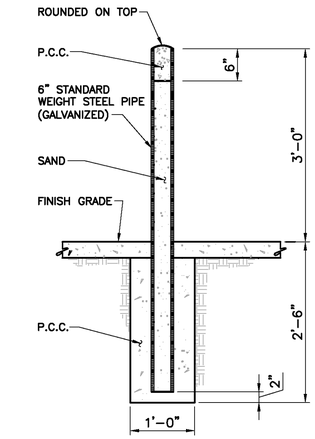

1 DETAIL
NTS

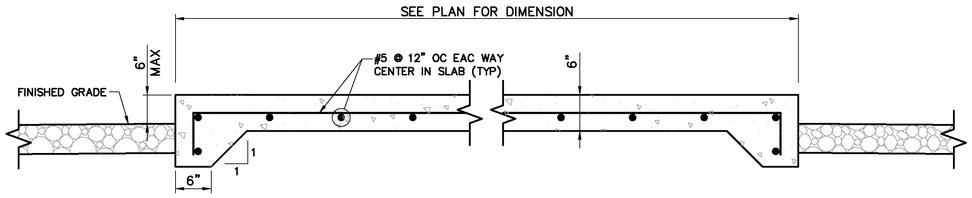

2 DETAIL
SCALE: 1"=1'-0"

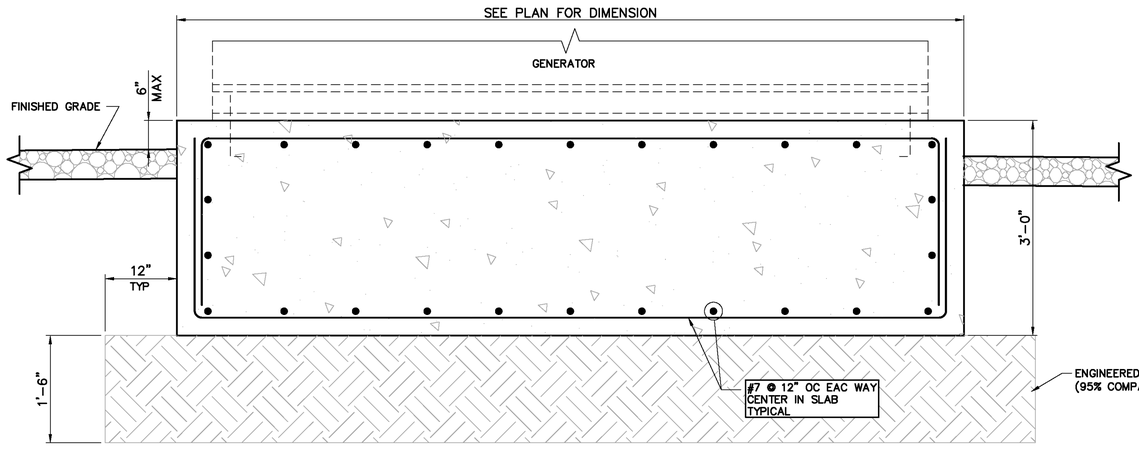

3 DETAIL
SCALE: 1"=1'-0"

40' 0' 40' 80'

SCALE: 1"=40'

ASBUILT

BID NO. 7185

COMPLETION DATE 03/25/2016

R.E. NAME DAVID HATCH

UPRR BRIDGE 55.54 LOS ANGELES SUB

DIGALERT
DIAL TOLL FREE
1-800-422-4133
AT LEAST TWO DAYS BEFORE YOU DIG
UNDERGROUND SERVICE ALERT OF SOUTHERN CALIFORNIA

MOFFATT & NICHOL
3780 KILROY AIRPORT WAY, SUITE 600
LONG BEACH, CALIFORNIA, 90806
562-426-9551

DATE

REGISTERED PROFESSIONAL ENGINEER
M.S. NICHOL
NO. C60129
EXP. 06/30/14
CIVIL
STATE OF CALIFORNIA

MARK	REVISIONS	APPR.	DATE

DESIGNED BY RW DRAWN BY TP CHECKED BY MSN

CITY OF RIVERSIDE, CALIFORNIA
PUBLIC WORKS DEPARTMENT

RIVERSIDE AVE UNDERPASS

ELECTRICAL LAYOUT PS-7

HORIZ. SCALE: AS SHOWN VERT. SCALE: AS SHOWN

ACCT. NO. -
W.O. NO. -

D-866

SHEET 61 OF 146

FILE NO.

DRAWING NAME: \\netapplib02\lb_projects\8318 lb13\CADD\Sheet\PUMP STATION\635501PS007.dwg
PLOT DATE: Sep 27, 2016 - 9:26am PLOTTED BY: dleigh

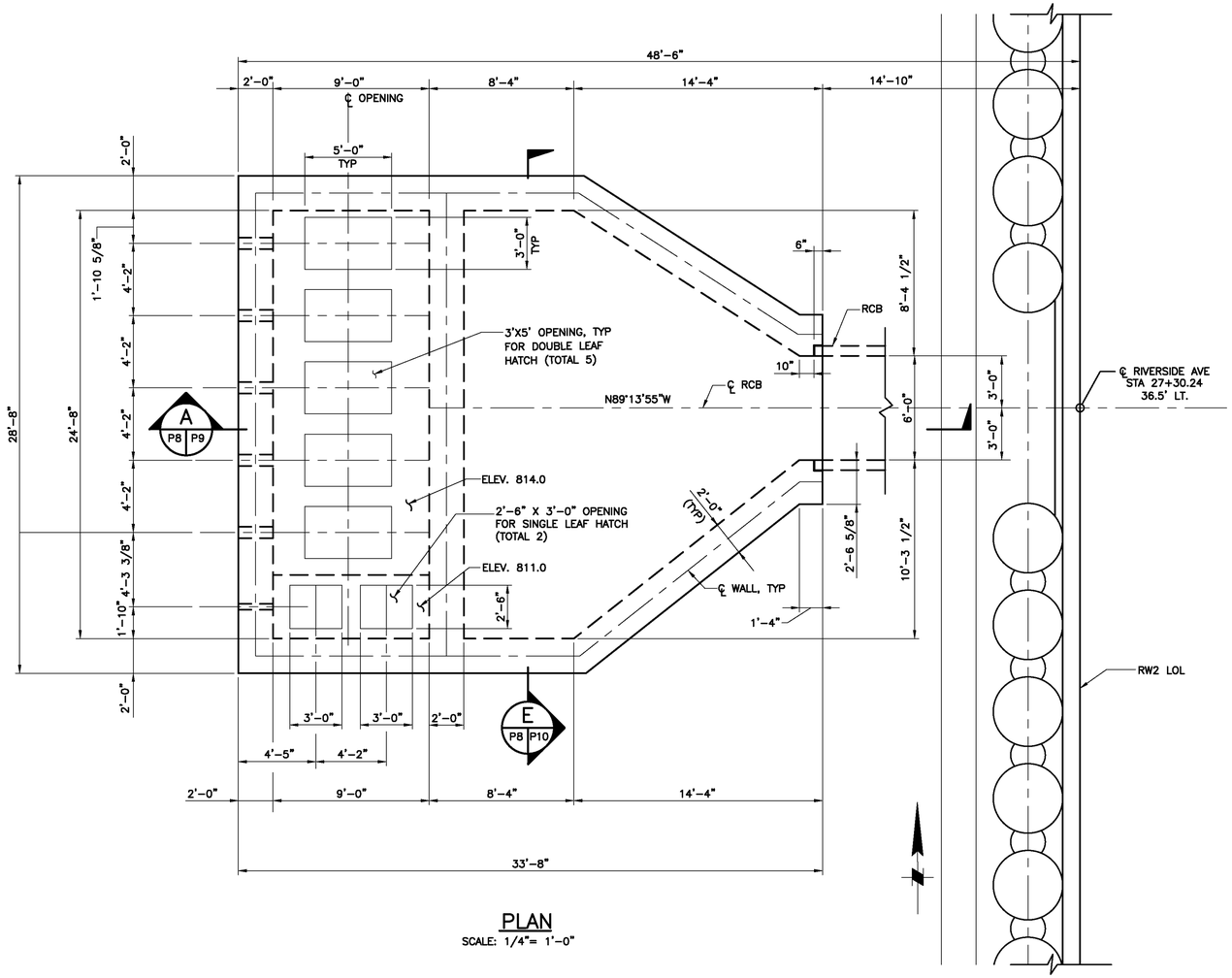

PLAN
SCALE: 1/4"= 1'-0"

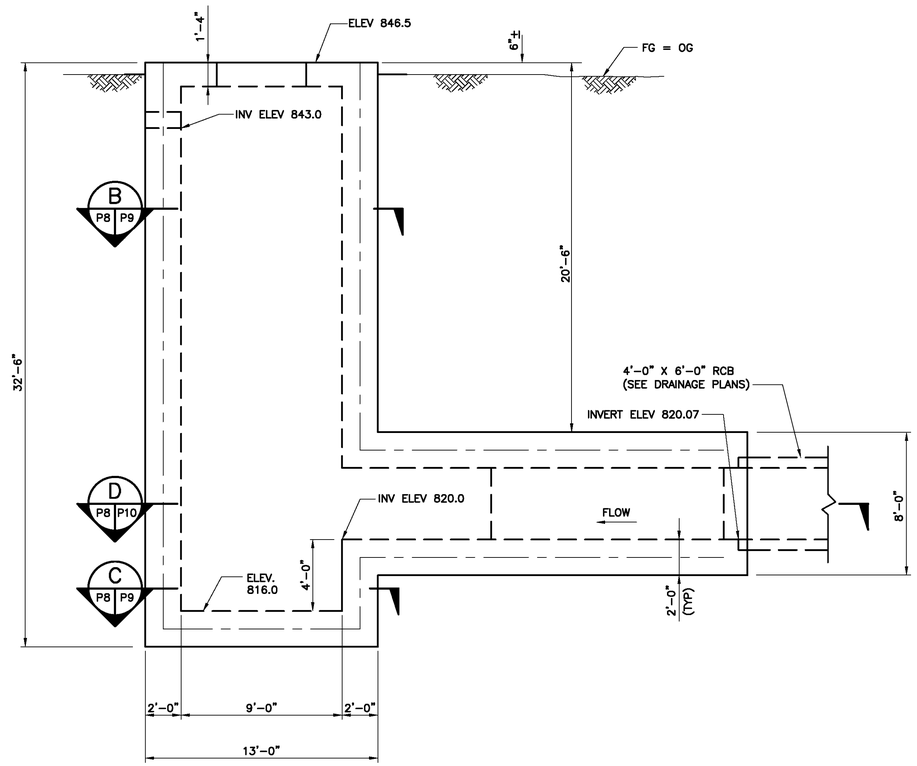

ELEVATION
SCALE: 1/4"= 1'-0"

GENERAL NOTES:

1. SPECIFICATIONS:
   AASHTO LRFD BRIDGE DESIGN SPECIFICATIONS
   4TH EDITION WITH CALTRANS AMENDMENTS.
2. MATERIALS:
   CONCRETE = fc'=4.0 ksi @ 28 DAYS.
   REINFORCING BARS: fy=60 ksi, ASTM A706.
3. SOIL:
   DENSITY = 120 pcf
   VERTICAL SPRING – 175 pci
   SOIL LATERAL LOADING – 56 H pcf WITHOUT WATER (RIGID)
   27 H + 62.4 H WITH WATER (RIGID)
   SEISMIC = 624 H RECTANGULAR
4. CONTRACTOR SHALL PROVIDE A SELECTED CONSTRUCTION METHOD, REQUIRED SHORING (IF SELECTED) AND SHOP DRAWINGS FOR REVIEW.
5. FOR RCB NOT SHOWN, SEE DRAINAGE PLANS FOR MORE DETAILS.
6. SEE CIVIL PLANS AND ROADWAY PLANS FOR INFORMATION NOT SHOWN.
7. CONTRACTOR SHALL COORDINATE WITH SELECTED PUMP MANUFACTURER FOR PUMP MANUFACTURER'S INSTRUCTION FOR ANCHORS, PIPES AND INSTALLATION.
8. CONCRETE COVER: 2" INSIDE FACE AND 3" OUTSIDE FACE UNLESS OTHERWISE STATED.

LEGEND:

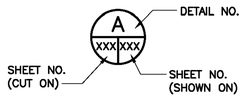

ASBUILT

BID NO. 7185

COMPLETION DATE 03/25/2016

R.E. NAME BONAVENTURE EZEJI

4'-0" 0'-0" 4'-0" 8'-0"

SCALE: 1/4"=1'-0"

UPRR BRIDGE 55.54 LOS ANGELES SUB

DIGALERT — DIAL TOLL FREE 1-800-422-4133 — AT LEAST TWO DAYS BEFORE YOU DIG — UNDERGROUND SERVICE ALERT OF SOUTHERN CALIFORNIA

MOFFATT & NICHOL
3780 KILROY AIRPORT WAY, SUITE 600
LONG BEACH, CALIFORNIA, 90806
562-426-9551

DATE _____

REGISTERED PROFESSIONAL ENGINEER — YONG DENG — NO. C65629 — EXP. 09/30/13 — CIVIL — STATE OF CALIFORNIA

MARK	REVISIONS	APPR.	DATE

DESIGNED BY RW DRAWN BY TP CHECKED BY MSN

CITY OF RIVERSIDE, CALIFORNIA
PUBLIC WORKS DEPARTMENT

RIVERSIDE AVE UNDERPASS

PUMP STATION STRUCTURE PS-8

HORIZ. SCALE: AS SHOWN VERT. SCALE: AS SHOWN

ACCT. NO. –
W.O. NO. –

R-4240

SHEET 62 OF 146

FILE NO.

DRAWING NAME: \\netapp1b02\1b_projects\3318 ib13\CADD\Sheet\PUMP STATION\63550 1PS008.dwg
PLOT DATE: Sep 27, 2016 - 9:26am PLOTTED BY: dleigh

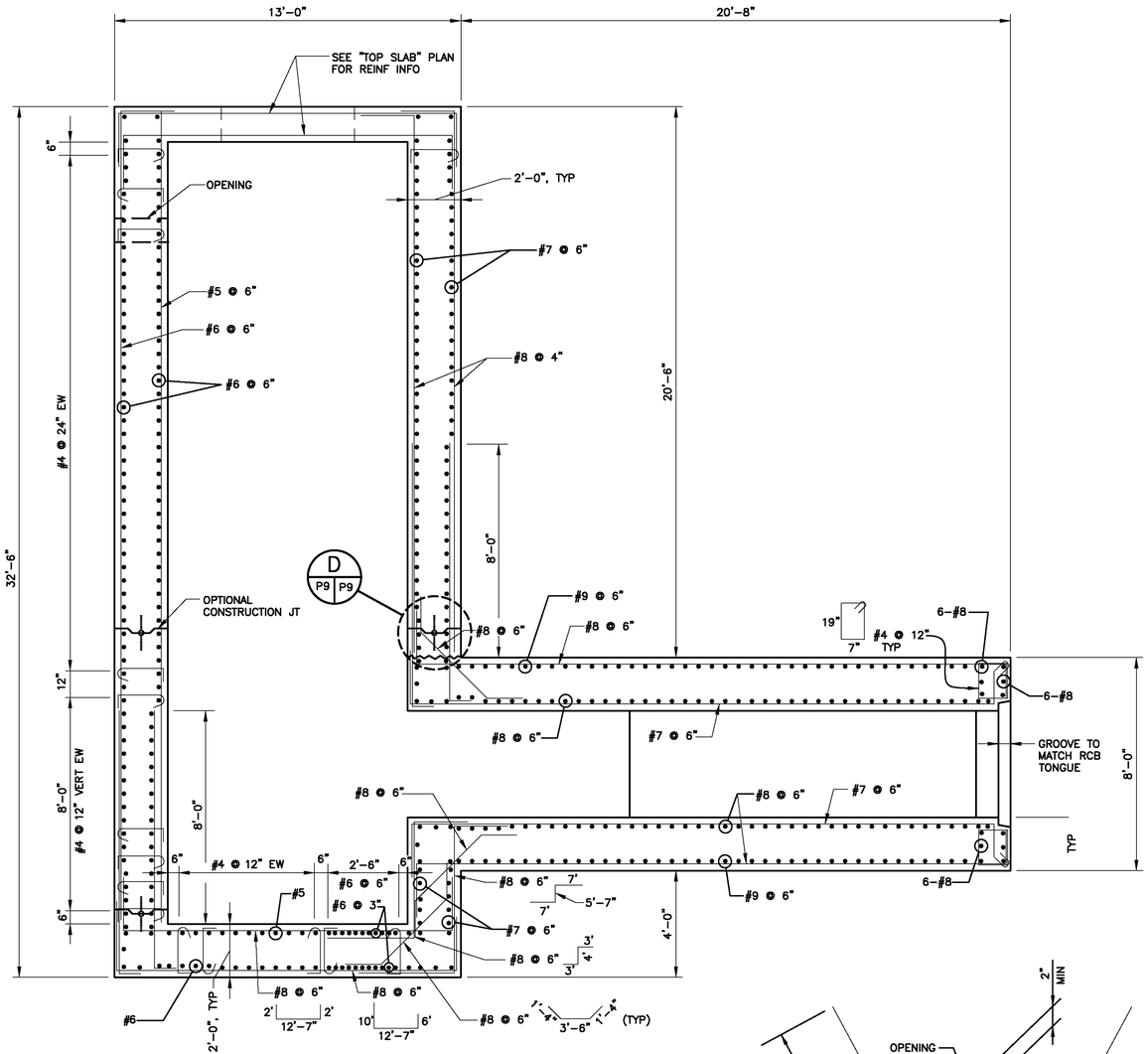

SECTION
SCALE: 3/8"= 1'-0"
A P8 P9

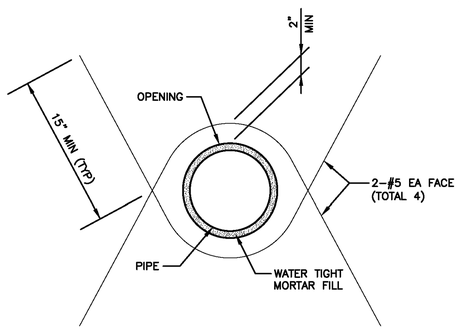

OPENING DETAIL
NTS

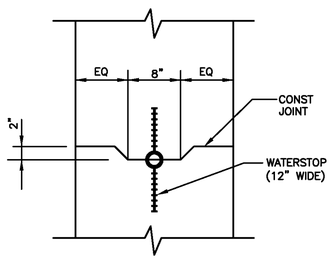

CONSTRUCTION JOINT WITH WATERSTOP DETAIL
NTS
D P9 P9

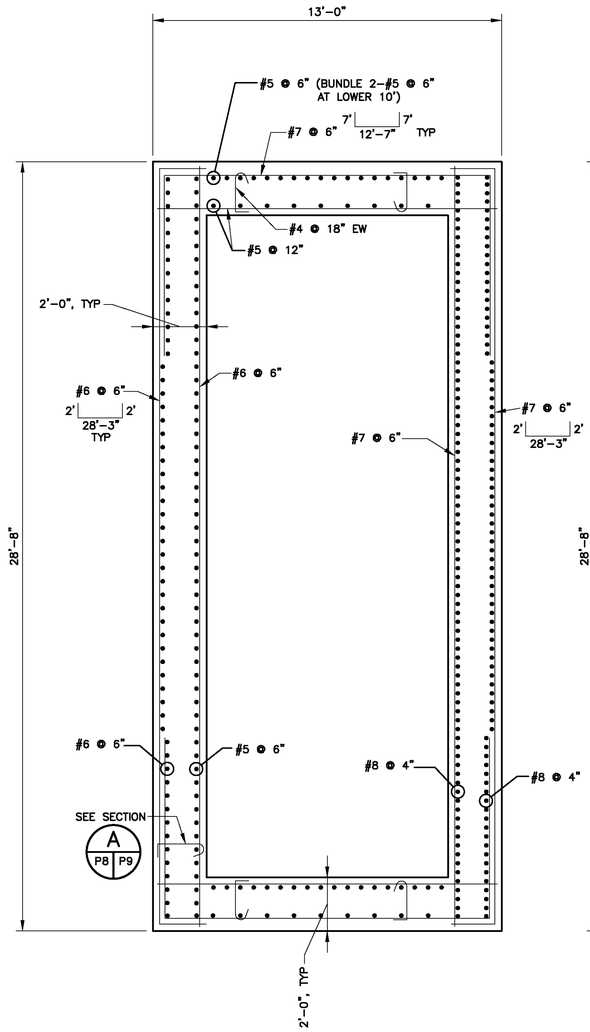

SECTION
SCALE: 3/8"= 1'-0"
B P8 P9

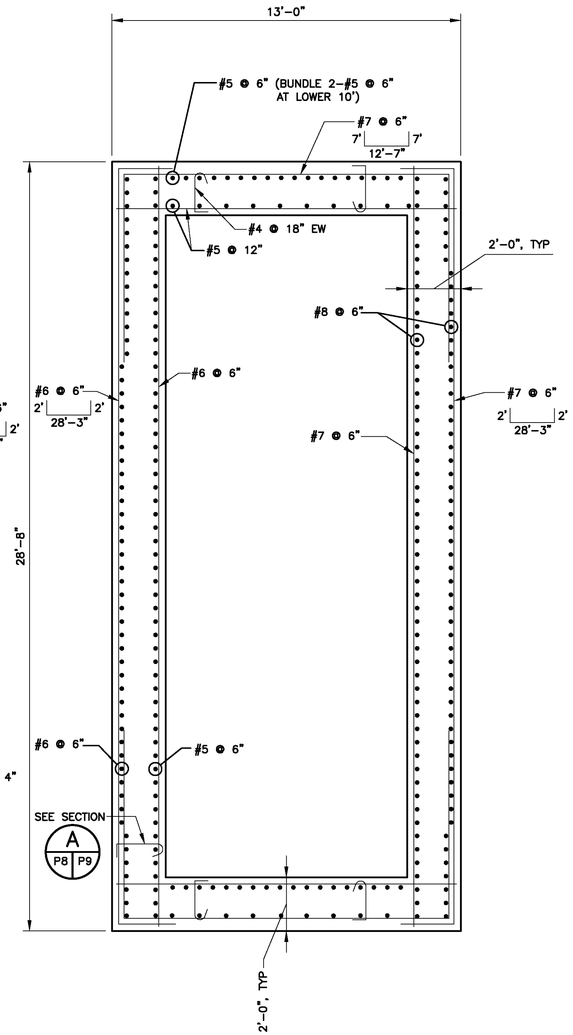

SECTION
SCALE: 3/8"= 1'-0"
C P8 P9

ASBUILT

BID NO. 7185
COMPLETION DATE 03/25/2016
R.E. NAME BONAVENTURE EZEJI

UPRR BRIDGE 55.54 LOS ANGELES SUB

DIGALERT
DIAL TOLL FREE
1-800-422-4133
AT LEAST TWO DAYS BEFORE YOU DIG
UNDERGROUND SERVICE ALERT OF SOUTHERN CALIFORNIA

MOFFATT & NICHOL
3780 KILROY AIRPORT WAY, SUITE 600
LONG BEACH, CALIFORNIA, 90806
562-426-9551

DATE

REGISTERED PROFESSIONAL ENGINEER
YONG DENG
NO. C65629
EXP. 09/30/13
CIVIL
STATE OF CALIFORNIA

MARK	REVISIONS	APPR.	DATE

DESIGNED BY RW DRAWN BY TP CHECKED BY MSN

CITY OF RIVERSIDE, CALIFORNIA
PUBLIC WORKS DEPARTMENT

RIVERSIDE AVE UNDERPASS

PUMP STATION STRUCTURE PS-9

HORIZ. SCALE: AS SHOWN VERT. SCALE: AS SHOWN

ACCT. NO. -
W.O. NO. -

R-4240

SHEET 63 OF 146

FILE NO.

DRAWING NAME: \\netapp1b02\lb_projects\8318 lb13\CADD\Sheet\PUMP STATION\635501PS009.dwg
PLOT DATE: Sep 27, 2016 - 9:26am PLOTTED BY: dhigh

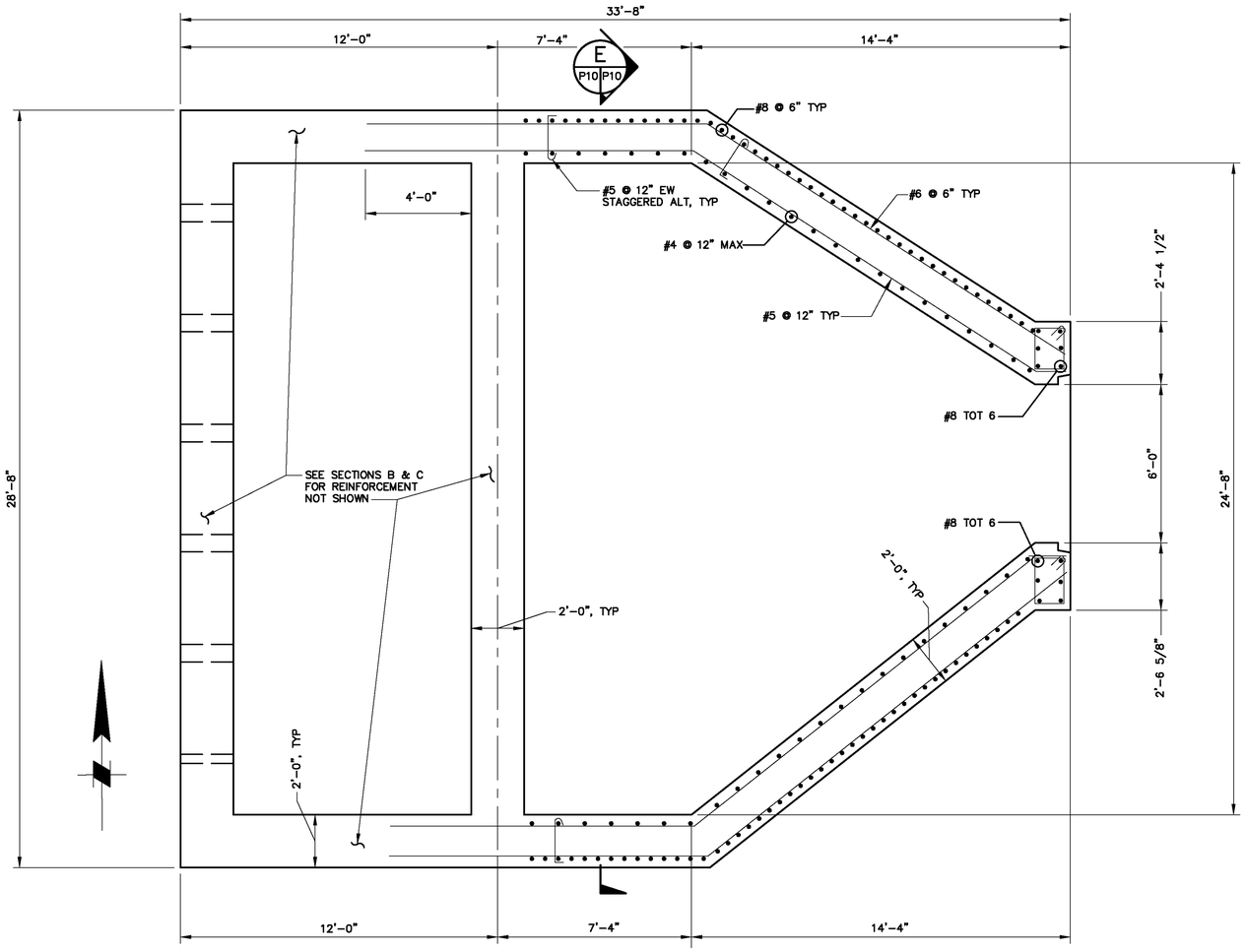

SECTION D
SCALE: 3/8"= 1'-0"

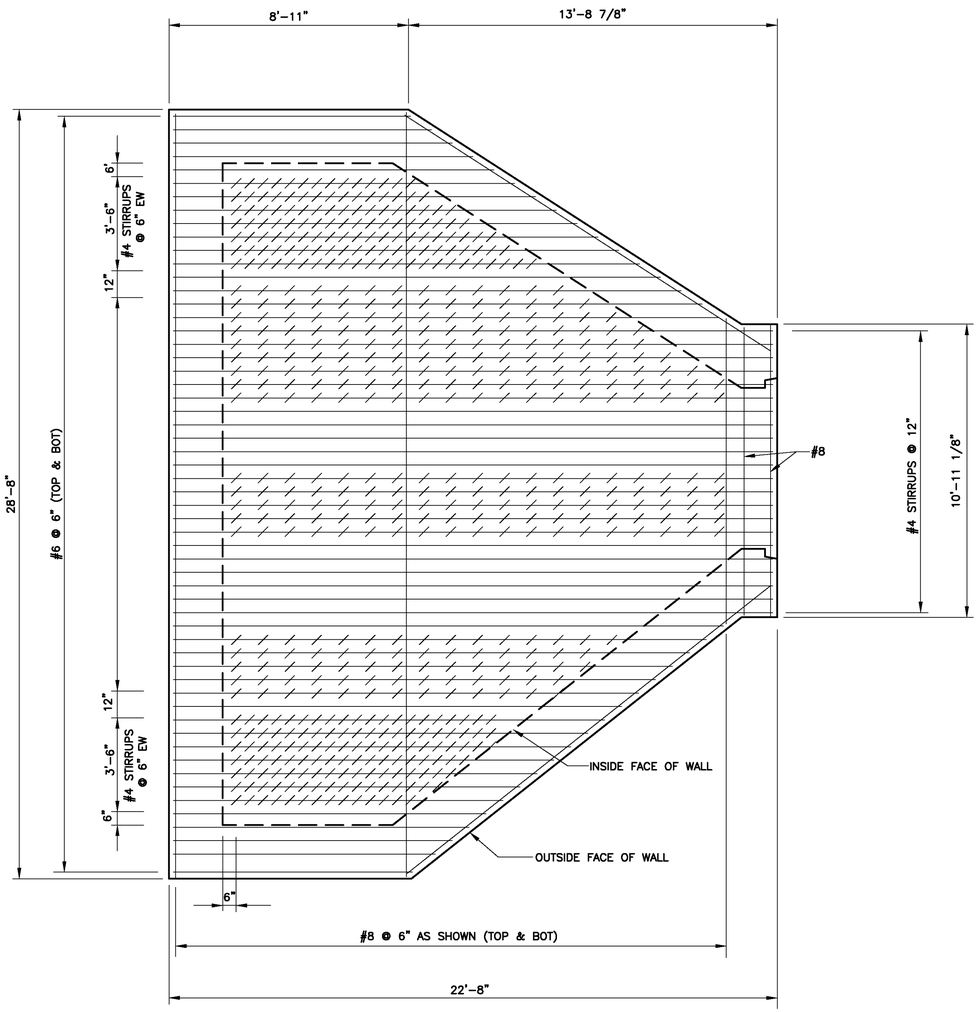

TOP & BOTTOM SLABS RBC TRANSITION

SCALE: 3/8"= 1'-0"

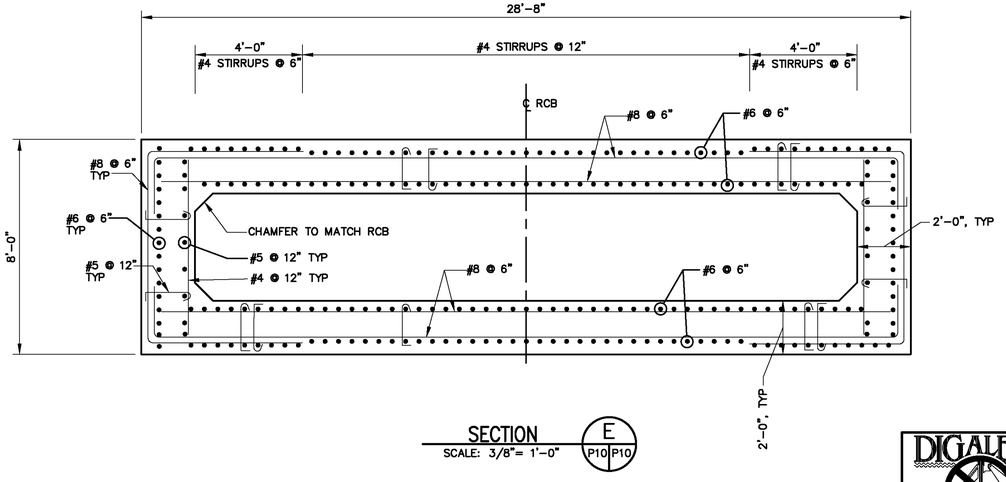

SECTION E
SCALE: 3/8"= 1'-0"

ASBUILT

BID NO. 7185
COMPLETION DATE 03/25/2016
R.E. NAME BONAVENTURE EZEJI

4'-0" 0'-0" 4'-0" 8'-0"
SCALE: 1/4"=1'-0"

DIGALERT
DIAL TOLL FREE
1-800-422-4133
AT LEAST TWO DAYS BEFORE YOU DIG
UNDERGROUND SERVICE ALERT OF SOUTHERN CALIFORNIA

MOFFATT & NICHOL
3780 KILROY AIRPORT WAY, SUITE 600
LONG BEACH, CALIFORNIA, 90806
562-426-9551

DATE

REGISTERED PROFESSIONAL ENGINEER
YONG DENG
NO. C65629
EXP. 09/30/13
CIVIL
STATE OF CALIFORNIA

MARK	REVISIONS	APPR.	DATE

DESIGNED BY RW DRAWN BY TP CHECKED BY MSN

UPRR BRIDGE 55.54 LOS ANGELES SUB

CITY OF RIVERSIDE, CALIFORNIA
PUBLIC WORKS DEPARTMENT

RIVERSIDE AVE UNDERPASS

PUMP STATION STRUCTURE PS-10

HORIZ. SCALE: AS SHOWN VERT. SCALE: AS SHOWN

ACCT. NO. -
W.O. NO. -

R-4240

SHEET 64 OF 146

FILE NO.

DRAWING NAME: \\retoppl02\lb_projects\6318 lb13\CADD\Sheet\PUMP STATION\63501PS010.dwg
PLOT DATE: Sep 27, 2016 - 9:25am PLOTTED BY: dhigh

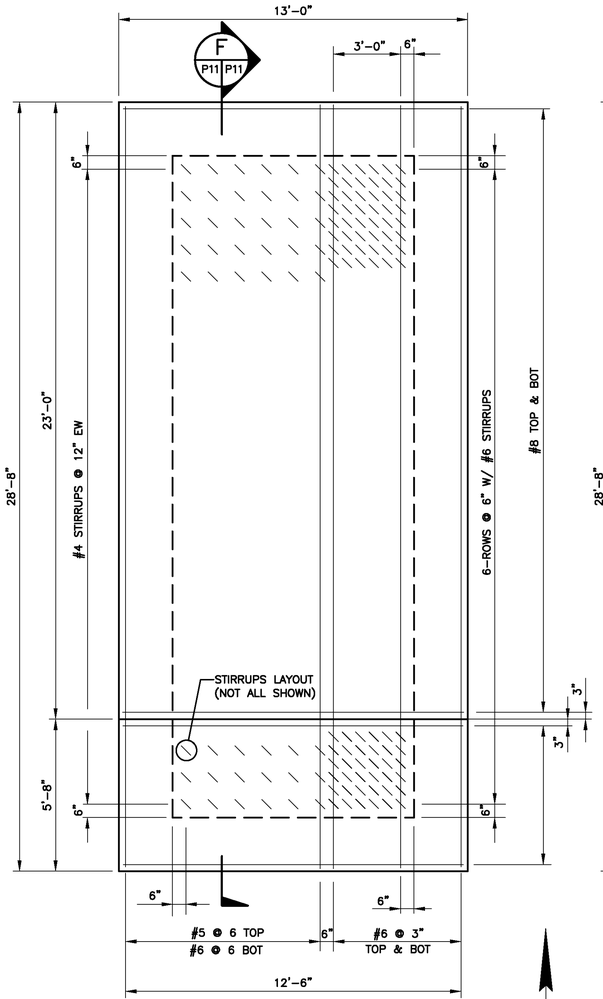

BOTTOM SLAB
SCALE: 3/8"= 1'-0"

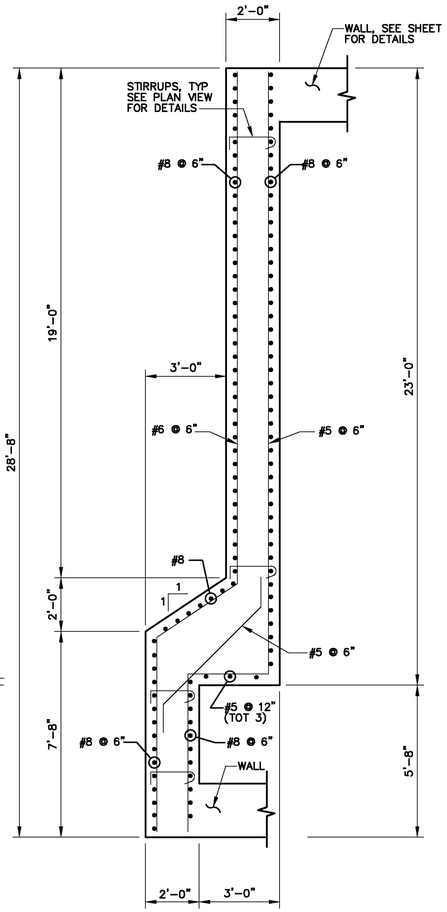

SECTION F
SCALE: 3/8"= 1'-0"
P11 P11

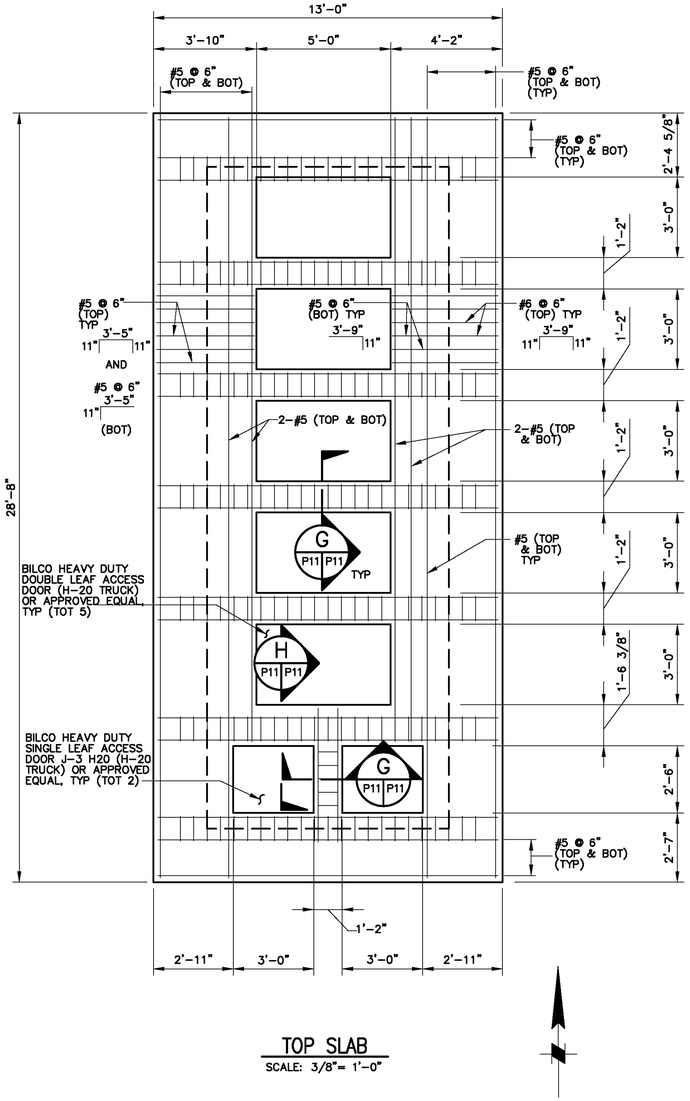

TOP SLAB
SCALE: 3/8"= 1'-0"

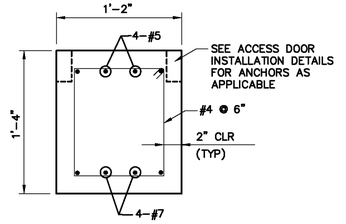

SECTION G
SCALE: 1 1/2"= 1'-0"
P11 P11

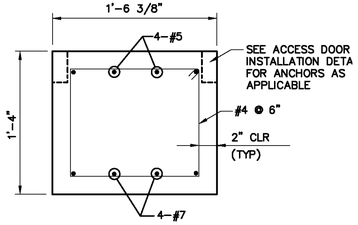

SECTION H
SCALE: 1 1/2"= 1'-0"
P11 P11

ASBUILT

BID NO. 7185

COMPLETION DATE 03/25/2016

R.E. NAME BONAVENTURE EZEJI

UPRR BRIDGE 55.54 LOS ANGELES SUB

DIGALERT
DIAL TOLL FREE
1-800-422-4133
AT LEAST TWO DAYS
BEFORE YOU DIG
UNDERGROUND SERVICE ALERT OF SOUTHERN CALIFORNIA

MOFFATT & NICHOL
3780 KILROY AIRPORT WAY, SUITE 600
LONG BEACH, CALIFORNIA, 90806
562-426-9551

DATE _____

REGISTERED PROFESSIONAL ENGINEER
YONG DENG
NO. C65629
EXP. 09/30/13
CIVIL
STATE OF CALIFORNIA

MARK	REVISIONS	APPR.	DATE

DESIGNED BY RW DRAWN BY TP CHECKED BY MSN

CITY OF RIVERSIDE, CALIFORNIA
PUBLIC WORKS DEPARTMENT

RIVERSIDE AVE UNDERPASS

PUMP STATION STRUCTURE PS-11

HORIZ. SCALE: AS SHOWN VERT. SCALE: AS SHOWN

ACCT. NO. -
W.O. NO. -

R-4240

SHEET 65 OF 146

FILE NO.

DRAWING NAME: \\netapplab02\lb_projects\b318 lb13\CADD\Sheet\PUMP STATION\635501PS011.dwg
PLOT DATE: Sep 27, 2016 - 9:29am PLOTTED BY: dengh

ABBREVIATIONS

AMP	AMPERE
ATS	AUTOMATIC TRANSFER SWITCH
BC	BARE COPPER
BKR	BREAKER
C	CONDUIT
CB	CIRCUIT BREAKER
CKT	CIRCUIT
COMM	COMMUNICATION
COR	CITY OF RIVERSIDE
D	DEEP
DIA	DIAMETER
DWG	DRAWING
ELEC	ELECTRICAL
ES	ENGINE START
EX OR EXIST	EXISTING
FLA	FULL LOAD AMPERE
G OR GND	GROUND
GEN	GENERATOR
GFCI	GROUND FAULT CIRCUIT INTERRUPTER
HP	HORSEPOWER
HT	HEIGHT
JB	JUNCTION BOX
KAIC	THOUSAND AMPS INTERRUPTING CAPACITY
KVA	KILO VOLT–AMPERE
KW	KILOWATT
M	METER
MIN	MINIMUM
MISC	MISCELLANEOUS
MS	MAIN SWITCHBOARD
N	NEUTRAL
NEC	NATIONAL ELECTRICAL CODE
NEMA	NATIONAL ELECTRICAL MANUFACTURERS ASSOCIATION
NO. OR #	NUMBER
P	POLE
PB	PULLBOX
PVC	POLYVINYL CHLORIDE
PWR	POWER
ø OR PH	PHASE
SWBD	SWITCHBOARD
TYP	TYPICAL
UG	UNDERGROUND
UGS	UNDERGROUND SERVICE
UL	UNDERWRITERS LABORATORIES INC.
UON	UNLESS OTHERWISE NOTED
V	VOLTAGE
VA	VOLT–AMPERES
VD	VOLTAGE DROP
VD%	PERCENT VOLTAGE DROP
W	WATT
WH	WATTHOUR
WP	WEATHERPROOF
W/	WITH
W/O	WITHOUT
XFMR	TRANSFORMER
3W	THREE–WIRE
4W	FOUR–WIRE

GENERAL NOTES:

1. ALL WORK SHALL COMPLY WITH THE LATEST EDITION OF THE CITY OF RIVERSIDE ELECTRICAL CODE AND ALL OTHER APPLICABLE FEDERAL STATE AND LOCAL CODES. WHERE THE PLANS SHOW MORE RESTRICTIVE REQUIREMENTS, THE PLANS SHALL GOVERN. NOTHING ON THESE PLANS SHALL BE INTERPRETED AS AUTHORITY TO VIOLATE ANY CODE OR REGULATION.
2. IN THE EVENT OF A CONFLICT OR INCONSISTENCY BETWEEN ITEMS INDICATED ON THE PLANS AND/OR SPECIFICATIONS OR WITH CODE REQUIREMENTS, THE NOTE, SPECIFICATION OR CODE WHICH PRESCRIBES AND ESTABLISHES THE MORE COMPLETE JOB OR THE HIGHER STANDARD SHALL PREVAIL.
3. ALL CIRCUIT BREAKERS, FUSES AND ELECTRICAL EQUIPMENT SHALL HAVE AN INTERRUPTING RATING NOT LESS THAN THE MAXIMUM SHORT CIRCUIT CURRENT TO WHICH THEY MAY BE SUBJECTED.
4. ALL MATERIALS AND EQUIPMENT SHALL BE NEW AND SHALL BEAR THE UNDERWRITERS' LABORATORIES INC (UL) LABEL AND SHALL BE INSTALLED IN THE MANNER FOR WHICH IT IS DESIGNED AND APPROVED. ALL ELECTRICAL EQUIPMENT SHALL BE LISTED BY A CITY OF RIVERSIDE RECOGNIZED ELECTRICAL TESTING LABORATORY.
5. ALL DEVICES INSTALLED OUTSIDE OR IN DAMP LOCATIONS SHALL BE APPROVED WEATHERPROOF.
6. ALL FEEDER CONDUCTORS AND BRANCH CIRCUIT WIRING SHALL BE TYPE THHN 90°/THWN–2 COPPER. ALL WIRE SHALL BE UL LISTED, RATED FOR 600 VOLTS, NO. 10 AWG MINIMUM SIZE UNLESS NOTED OTHERWISE.
7. INSTALL ALL CONDUITS AND WIRES WITH A MINIMUM NUMBER OF BENDS AND IN SUCH A MANNER AS TO CONFORM TO EXISTING, AND PROPOSED STRUCTURES. AVOID OBSTRUCTIONS, PRESERVE HEAD ROOM, KEEP OPENINGS AND PASSAGEWAYS CLEAR, AND MEET ALL STRUCTURAL CODE REQUIREMENTS.
8. THE CONTRACTOR SHALL NOT BORE, NOTCH OR IN ANY WAY CUT INTO ANY STRUCTURAL MEMBER.
9. PROVIDE SUPPORT FOR ALL FIXTURES AND ELECTRICAL EQUIPMENT TO COMPLY WITH THE SEISMIC REQUIREMENTS OF THE UNIFORM BUILDING CODE AND ALL LOCAL ORDINANCES.
10. THE CONTRACTOR SHALL MAKE POWER CONNECTIONS TO ALL EQUIPMENT FURNISHED BY OTHERS, THAT REQUIRE POWER CONNECTIONS.
11. THE CONTRACTOR SHALL SEAL ELECTRICAL CONDUIT ENTERING AREAS OF TEMPERATURE CHANGE BY TYPE FITTINGS TO PREVENT AIR MIGRATION CONDENSATION AND SEAL TIGHT FLEX CONDUIT FOR EXPANSION JOINTS.
12. THE ENTIRE ELECTRICAL INSTALLATION SHALL BE GROUNDED AS REQUIRED BY CODES AND THE SERVING UTILITY.
13. THE ENTIRE WIRING SYSTEM SHALL BE TESTED FOR SHORT CIRCUITS, GROUNDS AND INSTALLATION RESISTANCE BETWEEN CONDUCTORS AND TO GROUND, AND A CERTIFIED REPORT SHALL BE SUBMITTED.
14. FURNISH AND INSTALL ALL CONDUITS, WIRES, BOXES, SWITCHES, LIGHT FIXTURES (WITH LAMPS), RECEPTACLES, SERVICE DEVICES, AND PANEL BOARDS REQUIRED FOR A COMPLETE AND OPERATIONAL ELECTRICAL SYSTEM. ALL STARTERS, FUSED DISCONNECTS, BREAKERS, FUSES, CONTACTORS, SWITCHES, J–BOXES, CONDUITS, CONDULETS AND WIRES THAT ARE NOT SUPPLIED BY THE EQUIPMENT MANUFACTURER IN A PREWIRED PANEL ARE BY THE CONTRACTOR UNLESS OTHERWISE NOTED.
15. ALL SWITCHES AND CIRCUIT BREAKERS, DISCONNECTING MOTORS OR CONTROLLING ELECTRICAL DISCHARGE LIGHTING SHALL BE WITHIN SIGHT OF MOTORS (NOT OVER 50 FT) OR BE CAPABLE OF BEING LOCKED IN THE OPEN POSITION.

GENERAL NOTES (CONT.):

16. VERIFY EXISTING SITE CONDITIONS, VERIFY SERVICE EQUIPMENT REQUIREMENTS WITH SOUTHERN CALIFORNIA EDISON AND TELEPHONE COMPANY FOR EXACT LOCATIONS OF SERVICE FACILITIES BEFORE SUBMITTING BID.
17. THE CONTRACTOR SHALL RECEIVE, STORE AND INSTALL ALL ELECTRICAL ITEMS FURNISHED BY THE OWNER.
18. LOADS SERVED BY CIRCUIT BREAKERS IN SWITCHBOARDS SHALL BE IDENTIFIED WITH ENGRAVED BAKELITE NAMEPLATES ATTACHED WITH SCREWS.
19. THE CONTRACTOR SHALL PROVIDE A SET OF AS–BUILT DRAWINGS SHOWING ALL CHANGES MADE DURING CONSTRUCTION AND ANY DEVIATIONS FROM THE ELECTRICAL DRAWINGS.
20. THE ELECTRICAL DRAWINGS ARE DIAGRAMMATIC AND DO NOT SHOW ALL OFFSETS, BENDS, FITTINGS, JUNCTION BOXES, PULL BOXES AND EXPANSION FITTINGS REQUIRED TO MEET FIELD CONDITIONS. DETERMINE ACTUAL MATERIAL AND HARDWARE REQUIREMENTS AND VERIFY ALL DIMENSIONS BY FIELD INSPECTION.
21. ALL WORK AND MATERIALS SHALL COMPLY TO CITY OF RIVERSIDE DEPARTMENT OF BUILDING & SAFETY REQUIREMENTS. ELECTRICAL EQUIPMENT SHALL BE LISTED BY A CITY OF RIVERSIDE RECOGNIZED ELECTRICAL TESTING LABORATORY.
22. WHERE CROSSING ANY EXISTING SUBSTRUCTURES WITH NEW SUBSURFACE IMPROVEMENTS, THE CONTRACTOR SHALL TRENCH CAREFULLY TO LOCATE ALL ACTIVE AND IDLE SUBSTRUCTURES AT THESE CROSSINGS. THE CONTRACTOR SHALL BE RESPONSIBLE TO REPAIR ALL EQUIPMENT AND SUBSTRUCTURES DAMAGED DURING CONSTRUCTION AT NO ADDITIONAL COST TO THE CITY IF THE DAMAGED EQUIPMENT AND SUBSTRUCTURE ARE SHOWN ON THESE DRAWINGS OR THE REFERENCE DRAWINGS.
23. DEPTH OF DIRECT BURIAL AND CONCRETE ENCASED CONDUIT SHALL BE 3'–6" FROM FINISHED SURFACE UNLESS OTHERWISE NOTED.
24. ELECTRICAL EQUIPMENT AND DEVICES INSTALLED OUTDOORS SHALL BE ENCLOSED IN WEATHERPROOF, CORROSION RESISTANT, STAINLESS STEEL, NEMA 4X ENCLOSURES. HARDWARE SHALL BE STAINLESS STEEL.
25. UNDERGROUND CONDUIT SHALL BE NON METALLIC RIGID SCHEDULE 40 PVC. ALL UNDERGROUND CONDUIT BENDS AND PVC CONDUIT JOINTS SHALL BE NON METALLIC SCHEDULE 80 PVC AS REQUIRED. ALL EXPOSED CONDUIT SHALL BE RIGID GALVANIZED STEEL.
26. ALL TRANSFORMERS SHALL BE DRY–TYPE, UNLESS OTHERWISE NOTED.
27. CONTRACTOR SHALL PREPARE AND SUBMIT AN ARC FLASH STUDY PER NFPA 70. THE STUDY SHALL BE BASED ON THE EQUIPMENT INSTALLED.

SYMBOL LIST:

- CONDUIT RUN UNDERGROUND
- CONDUIT TURNS UP TOWARDS OBSERVER
- CONDUIT TURNS DOWN AWAY FROM OBSERVER
- CONDUIT STUB OUT & CAP
- EQUIPMENT ENCLOSURE
- FLEXIBLE POWER CORD (LIQUID–TIGHT)
- CONDUIT SEAL
- 20A, 1P, 120V, DUPLEX RECEPTACLE, NEMA 5–20R
- (M) UTILITY DEMAND METER
- AUTOMATIC TRANSFER SWITCH, 3–POLE, 4–WIRE
- PANEL BOARD
- PUMP STATION CONTROL PANEL
- SWITCHBOARD
- NORMALLY OPEN CONTACT
- NORMALLY CLOSED CONTACT
- B1–6 CONDUIT AND FEEDER CALL OUT
- 1 / PSE-04 REFERS TO DETAIL NO. 1 ON SHEET E–4, U.N.O.
- J JUNCTION BOX
- PB PULL BOX
- DISCONNECT SWITCH, HEAVY–DUTY, NONFUSIBLE TYPE
- F DISCONNECT SWITCH, HEAVY–DUTY, FUSIBLE TYPE
- MOTOR STARTER, MAGNETIC, FULL–VOLTAGE, NON–REVERSING TYPE
- (5) MOTOR, NUMBER INSIDE INDICATES HP RATING
- PUSH BUTTON STATION OR SELECTOR SWITCH
- GROUND ROD, 3/4" DIA x 10'–0" COPPERCLAD STEEL
- GROUND WELL
- A AREA LIGHT, "A" INDICATES FIXTURE TYPE, SEE FIXTURE SCHEDULE ON PS–19
- GROUNDING ELECTRODE & CONDUCTOR
- EXOTHERMIC WELD GROUND CONNECTIONS
- 250AF / 200AT / 3P MOLDED CASE CIRCUIT BREAKER; MCP = MOTOR CIRCUIT PROTECTOR; AF = FRAME SIZE (250 AMPS INDICATED); AT = TRIP RATING (200 AMPS INDICATED); 3P = THREE POLE
- GF CIRCUIT BREAKER WITH GROUND FAULT PROTECTION
- 75KVA / 480–240V / 3ø TRANSFORMER; KVA, VOLTAGE & PHASE AS INDICATED
- CURRENT TRANSFORMER
- 480/120V POTENTIAL TRANSFORMER

CONDUIT & FEEDER SCHEDULE

FEEDER#	VOLTS	CONDUIT	CONDUCTOR	FROM	TO	REMARKS
COR		(2)4" PVC		CITY OF RIVERSIDE POINT OF SERVICE	CITY OF RIVERSIDE TRANSFORMER	–
MS	277/480	(3)4" PVC	–	CITY OF RIVERSIDE TRANSFORMER	MAIN SWITCHBOARD MS	PER UTILITY REQUIREMENTS
MS1	480	2" PVC	3#1 & 1#8 GND	MAIN SWITCHBOARD MS	PUMP	–
MS2	480	2" PVC	3#1 & 1#8 GND	MAIN SWITCHBOARD MS	PUMP	–
MS3	480	2" PVC	3#1 & 1#8 GND	MAIN SWITCHBOARD MS	PUMP	–
MS4	480	2" PVC	3#1 & 1#8 GND	MAIN SWITCHBOARD MS	PUMP	–
MS5	480	2" PVC	3#1 & 1#8 GND	MAIN SWITCHBOARD MS	PUMP	–
MS6	480	2" PVC	3#6 & 1#10 GND	MAIN SWITCHBOARD MS	SUMP PUMP	–
MS7	480	2" PVC	3#6 & 1#10 GND	MAIN SWITCHBOARD MS	SUMP PUMP	–
MS9	480	–	2#1 & 1#8 GND	MAIN SWITCHBOARD MS	37.5 KVA TRANSFORMER	–
MS10	120/240	1½" PVC	2#10 & 1#10 GND	PANEL MPP	AREA LIGHTING	–
MS1A	480	2" PVC SLEEVES	50' POWER CORD	MAIN SWITCHBOARD MS	PUMP	POWER CORD PER PUMP MFG
MS2A	480	2" PVC SLEEVES	50' POWER CORD	MAIN SWITCHBOARD MS	PUMP	POWER CORD PER PUMP MFG
MS3A	480	2" PVC SLEEVES	50' POWER CORD	MAIN SWITCHBOARD MS	PUMP	POWER CORD PER PUMP MFG
MS4A	480	2" PVC SLEEVES	50' POWER CORD	MAIN SWITCHBOARD MS	PUMP	POWER CORD PER PUMP MFG
MS5A	480	2" PVC SLEEVES	50' POWER CORD	MAIN SWITCHBOARD MS	PUMP	POWER CORD PER PUMP MFG
MS6A	480	2" PVC SLEEVES	50' POWER CORD	MAIN SWITCHBOARD MS	SUMP PUMP	POWER CORD PER PUMP MFG
MS7A	480	2" PVC SLEEVES	50' POWER CORD	MAIN SWITCHBOARD MS	SUMP PUMP	POWER CORD PER PUMP MFG
GEN	480/277	2–4"	4–350 KCMIL & 1#1/0 GND EACH	GENERATOR SET	AUTOMATIC TRANSFER SWITCH	POWER CORD PER PUMP MFG
ES	CONTROL	2"	5#10	GENERATOR SET	AUTOMATIC TRANSFER SWITCH	ENGINE START

ASBUILT

BID NO. 7185

COMPLETION DATE 03/25/2016

R.E. NAME DAVID HATCH

DIGALERT — DIAL TOLL FREE 1–800–422–4133 AT LEAST TWO DAYS BEFORE YOU DIG — UNDERGROUND SERVICE ALERT OF SOUTHERN CALIFORNIA

MOFFATT & NICHOL
3780 KILROY AIRPORT WAY, SUITE 600
LONG BEACH, CALIFORNIA, 90806
562–426–9551

DATE _____

REGISTERED PROFESSIONAL ENGINEER — TYLER W. SPARKS — No. E16039 — EXP. 9/30/13 — ELECTRICAL — STATE OF CALIFORNIA

MARK	REVISIONS	APPR.	DATE

DESIGNED BY RW DRAWN BY TP CHECKED BY MSN

UPRR BRIDGE 55.54 LOS ANGELES SUB

CITY OF RIVERSIDE, CALIFORNIA
PUBLIC WORKS DEPARTMENT

RIVERSIDE AVE UNDERPASS

GENERAL NOTES, SYMBOLS & ABBREVIATIONS PS–12

HORIZ. SCALE: AS SHOWN VERT. SCALE: AS SHOWN

ACCT. NO. –
W.O. NO. –

D–866

SHEET 66 OF 146

FILE NO.

DRAWING NAME: \\netapp1b02\b_projects\6318.10\13\CADD\Sheet\PUMP STATION\635501PS012.dwg
PLOT DATE: Sep 27, 2016 – 9:26am PLOTTED BY: dreigh

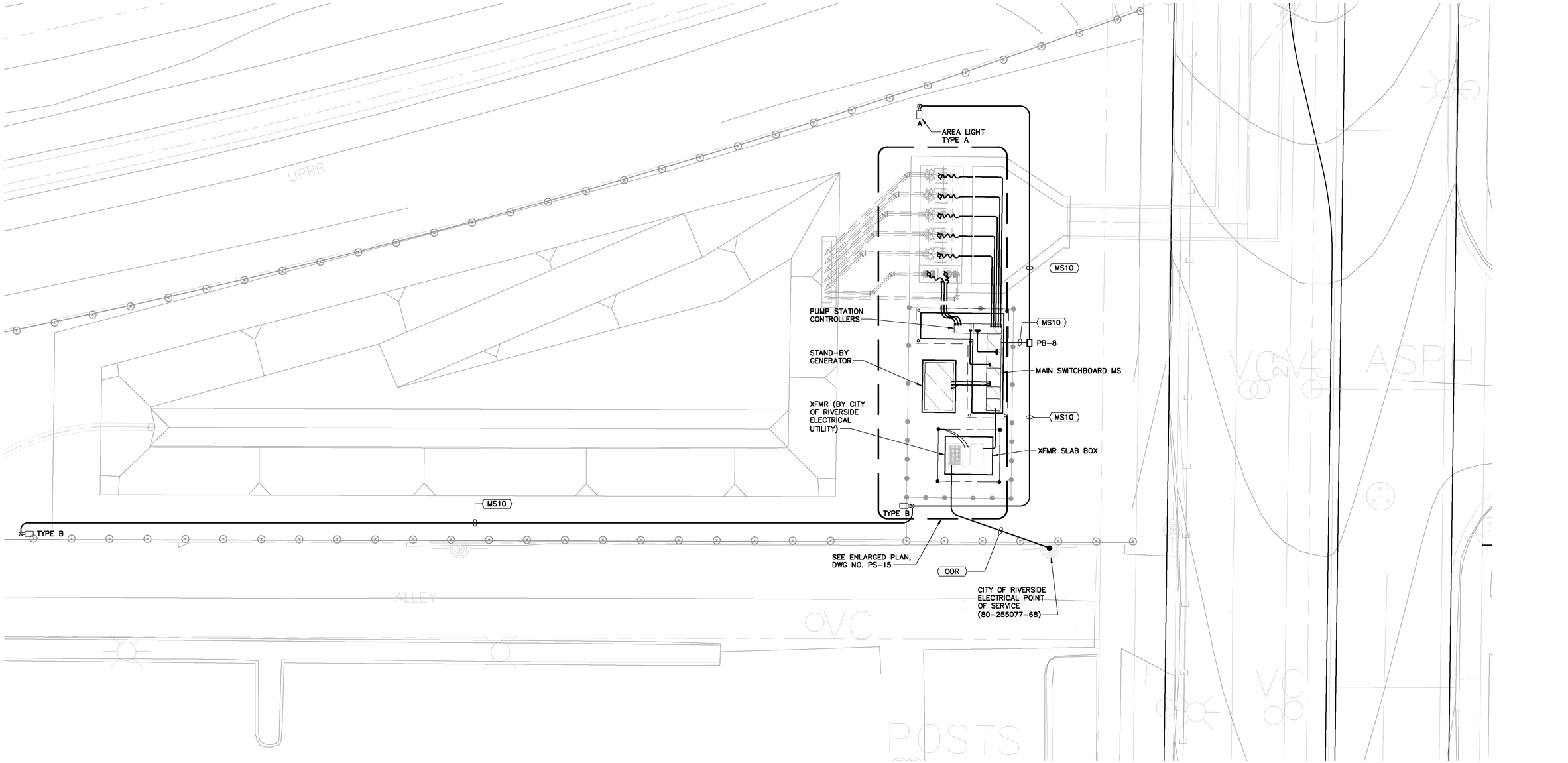

ELECTRICAL SITE PLAN
SCALE: 1"=10'

ASBUILT

BID NO. 7185

COMPLETION DATE 03/25/2016

R.E. NAME DAVID HATCH

10' 0' 10' 20'

SCALE: 1"=10'

DIGALERT
DIAL TOLL FREE
1-800-422-4133
AT LEAST TWO DAYS BEFORE YOU DIG
UNDERGROUND SERVICE ALERT OF SOUTHERN CALIFORNIA

MOFFATT & NICHOL
3780 KILROY AIRPORT WAY, SUITE 600
LONG BEACH, CALIFORNIA, 90806
562-426-9551

DATE

REGISTERED PROFESSIONAL ENGINEER
TYLER W. SPARKS
No. E16039
EXP. 9/30/13
ELECTRICAL
STATE OF CALIFORNIA

MARK	REVISIONS	APPR.	DATE

DESIGNED BY RW DRAWN BY TP CHECKED BY MSN

UPRR BRIDGE 55.54 LOS ANGELES SUB

CITY OF RIVERSIDE, CALIFORNIA
PUBLIC WORKS DEPARTMENT

RIVERSIDE AVE UNDERPASS

ELECTRICAL SITE PLAN PS-13

HORIZ. SCALE: AS SHOWN VERT. SCALE: AS SHOWN

ACCT. NO. -
W.O. NO. -

D-866

SHEET 67 OF 146

FILE NO.

DRAWING NAME: \\netapp1b02\lb_projects\8318 (b13)\CADD\Sheet\PUMP STATION\635501PS013.dwg
PLOT DATE: Sep 27, 2016 - 9:26am PLOTTED BY: dleigh

LOAD SUMMARY MAIN SWITCHBOARD MS

480/277V		3 PHASE 4 WIRE
LOCATION: OUTDOOR		BUSWAY: 800AMP
CKT NO.	EQUIPMENT	FLA
1	PUMP P-1	78
2	PUMP P-2	78
3	PUMP P-3	78
4	PUMP P-4	78
5	PUMP P-5	78
6	SUMP PUMP S-1	37
7	SUMP PUMP S-2	37
8	SPACE	
9	37.5 KVA TRANSFORMER/HOUSE PANEL	45
TOTAL		509A

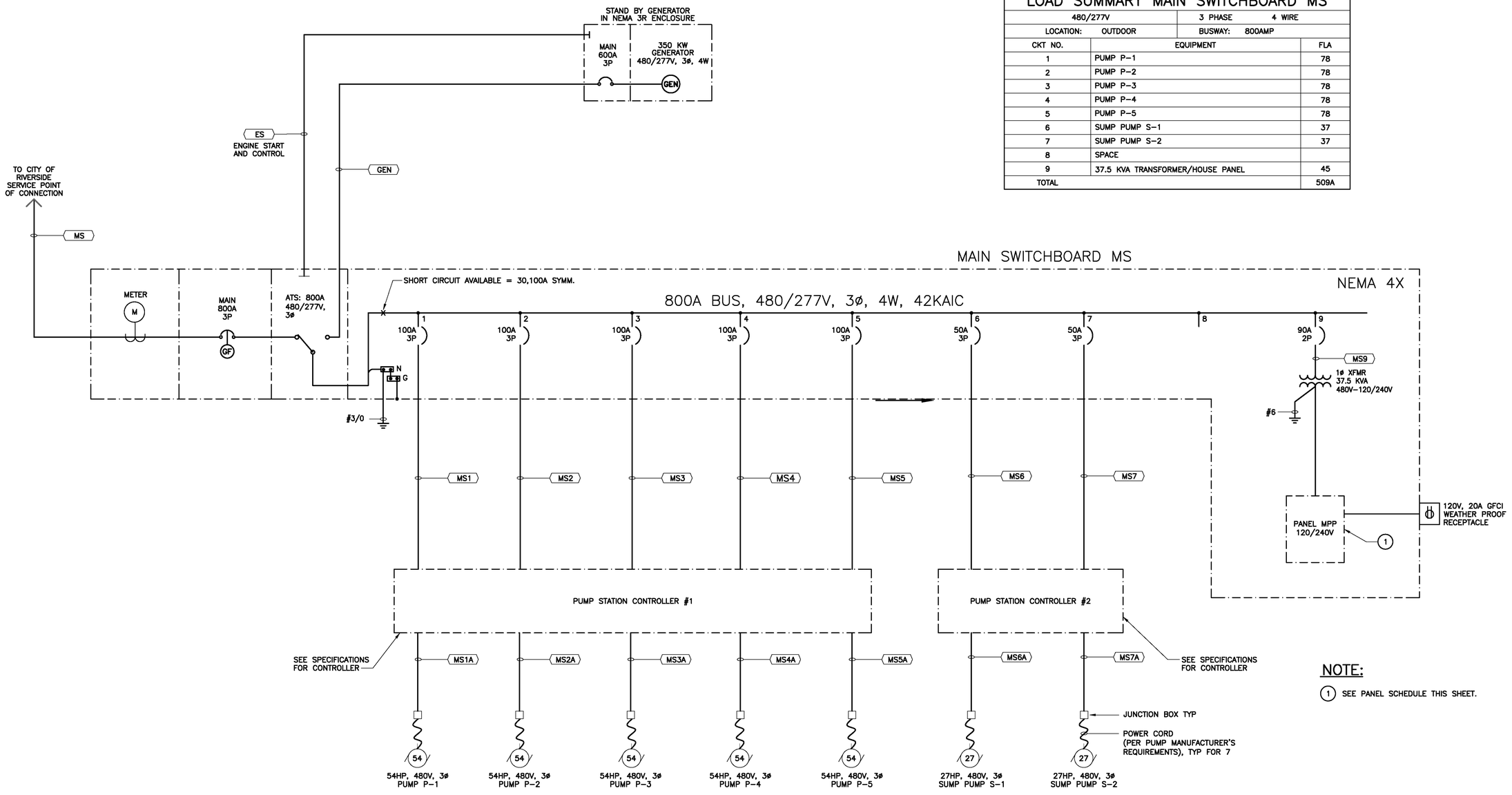

NOTE:

(1) SEE PANEL SCHEDULE THIS SHEET.

PANEL: MPP

LOCATION : SWBD MS
FLOOR : .
MOUNTING : SURFACE

VOLTAGE/PHASE : 240/120V, 1ø, 3W
BUS AMPS : 200A
MAIN BREAKER : 150A, 2P

FED FROM : MAIN SWBD XFMR
MINIMUM BUS BRACING : 14KA

LOADS	SEE NOTE	OUTLETS MISC	OUTLETS REC	OUTLETS LTG	VOLT-AMPS A	VOLT-AMPS B	CKT	BKR/ POLE	A B	BKR/ POLE	CKT	VOLT-AMPS A	VOLT-AMPS B	OUTLETS LTG	OUTLETS REC	OUTLETS MISC	SEE NOTE	LOADS
AREA LIGHTING	1	3	720	·	720		1	20/2	*–	20/1	2	480		·	·	·	·	GEN. BATT. CHARGER
SPARE	·	·	·	·		–	3	20/1	–*	20/1	4		1992	·	·	·	2	SWBD RECEPTACLE
GENERATOR BLOCK HTR.	·	·	·	·	2880		5	20/2	*–	20/1	6	·		·	·	·	·	SPARE
–	·	·	·	·		2880	7	–	–*	20/1	8		·	·	·	·	·	SPARE
.	·	·	·	·	·		9	·	*–	20/1	10	·		·	·	·	·	SPARE
.	·	·	·	·		·	11	·	–*	·	12		·	·	·	·	·	.
.	·	·	·	·	·		13	·	*–	·	14	·		·	·	·	·	.
.	·	·	·	·		·	15	·	–*	·	16		·	·	·	·	·	.
.	·	·	·	·	·		17	·	*–	·	18	·		·	·	·	·	.
.	·	·	·	·		·	19	·	–*	·	20		·	·	·	·	·	.

TOTAL A = 4080 VOLT-AMPS
TOTAL B = 4872 VOLT-AMPS
LCL = 180 VOLT-AMPS

TOTAL = 9,132 VA @ 240V, 1ø = 38 AMPS

NOTES:
1. PHOTOCELL CONTROLLED
2. GFCI TYPE WEATHERPROOF

ASBUILT

BID NO. 7185
COMPLETION DATE 03/25/2016
R.E. NAME DAVID HATCH

DIGALERT
DIAL TOLL FREE 1-800-422-4133
AT LEAST TWO DAYS BEFORE YOU DIG
UNDERGROUND SERVICE ALERT OF SOUTHERN CALIFORNIA

MOFFATT & NICHOL
3780 KILROY AIRPORT WAY, SUITE 600
LONG BEACH, CALIFORNIA, 90806
562-426-9551

DATE

REGISTERED PROFESSIONAL ENGINEER TYLER W. SPARKS No. E16039 EXP. 9/30/13 ELECTRICAL STATE OF CALIFORNIA

MARK	REVISIONS	APPR.	DATE

DESIGNED BY RW DRAWN BY TP CHECKED BY MSN

UPRR BRIDGE 55.54 LOS ANGELES SUB

CITY OF RIVERSIDE, CALIFORNIA
PUBLIC WORKS DEPARTMENT

RIVERSIDE AVE UNDERPASS

SINGLE LINE DIAGRAM PS-14

HORIZ. SCALE: AS SHOWN VERT. SCALE: AS SHOWN

ACCT. NO. –
W.O. NO. –

D-866

SHEET 68 OF 146

FILE NO.

DRAWING NAME: \\netapp1b02\lb_projects\631B lb13\CADD\Sheet\PUMP STATION\635501PS014.dwg
PLOT DATE: Sep 27, 2016 - 9:26am PLOTTED BY: dhsph

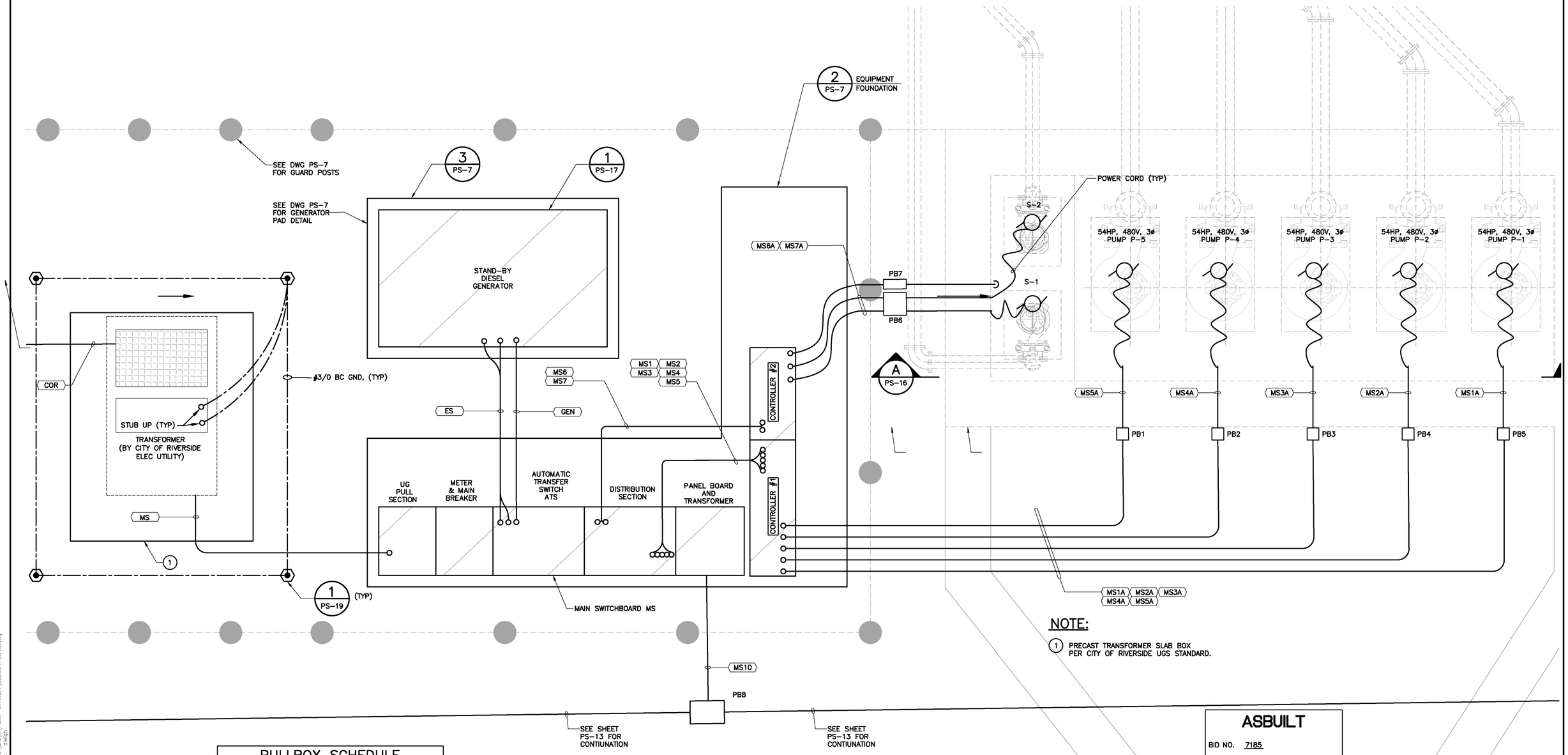

NOTE:

(1) PRECAST TRANSFORMER SLAB BOX PER CITY OF RIVERSIDE UGS STANDARD.

PULLBOX SCHEDULE

DESIGNATION	COVER	SIZE	MATERIAL
PB1	ELEC	24" x 24" x 24"D	CONCRETE
PB2	ELEC	24" x 24" x 24"D	CONCRETE
PB3	ELEC	24" x 24" x 24"D	CONCRETE
PB4	ELEC	24" x 24" x 24"D	CONCRETE
PB5	ELEC	24" x 24" x 24"D	CONCRETE
PB6	ELEC	24" x 24" x 24"D	CONCRETE
PB7	COMM	12" x 24" x 12"D	CONCRETE
PB8	ELEC	11" X 17" X 24"D	CONCRETE

1 PS-15 **ENLARGED ELECTRICAL PLAN**
SCALE: 1"=10'

ASBUILT

BID NO. 7185
COMPLETION DATE 03/25/2016
R.E. NAME DAVID HATCH

DIGALERT
DIAL TOLL FREE
1-800-422-4133
AT LEAST TWO DAYS BEFORE YOU DIG
UNDERGROUND SERVICE ALERT OF SOUTHERN CALIFORNIA

MOFFATT & NICHOL
3780 KILROY AIRPORT WAY, SUITE 600
LONG BEACH, CALIFORNIA, 90806
562-426-9551

DATE

REGISTERED PROFESSIONAL ENGINEER
TYLER W. SPARKS
No. E16039
EXP. 9/30/13
ELECTRICAL
STATE OF CALIFORNIA

MARK	REVISIONS	APPR.	DATE

DESIGNED BY RW DRAWN BY TP CHECKED BY MSN

UPRR BRIDGE 55.54 LOS ANGELES SUB

CITY OF RIVERSIDE, CALIFORNIA
PUBLIC WORKS DEPARTMENT

RIVERSIDE AVE UNDERPASS

ELECTRICAL ENLARGED PLAN PS-15

HORIZ. SCALE: AS SHOWN VERT. SCALE: AS SHOWN

ACCT. NO. -
W.O. NO. -

D-866

SHEET 69 OF 146

FILE NO.

DRAWING NAME: \\netapp\ip02\lb_projects\8318 (b13)\CADD\Sheet\PUMP STATION\635501PS015.dwg
PLOT DATE: Sep 27, 2016 - 9:29am PLOTTED BY: dleigh

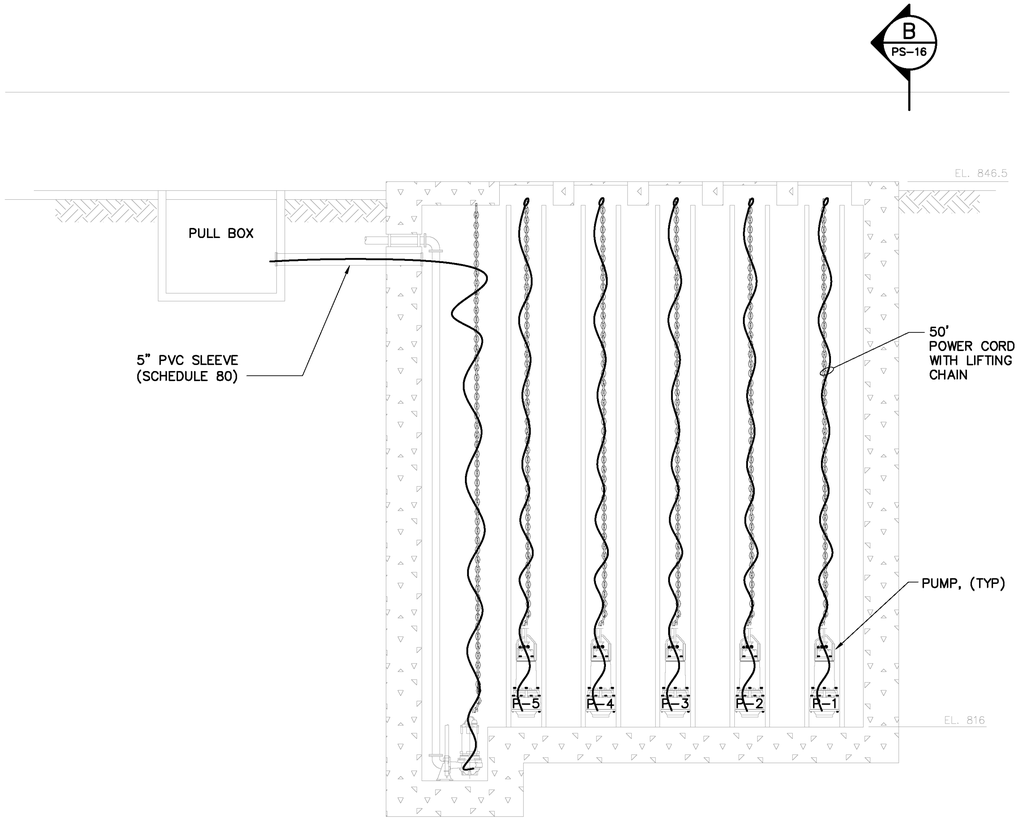

A PS-16 **PUMP WELL SECTION**
SCALE: 1/4"=1'-0"

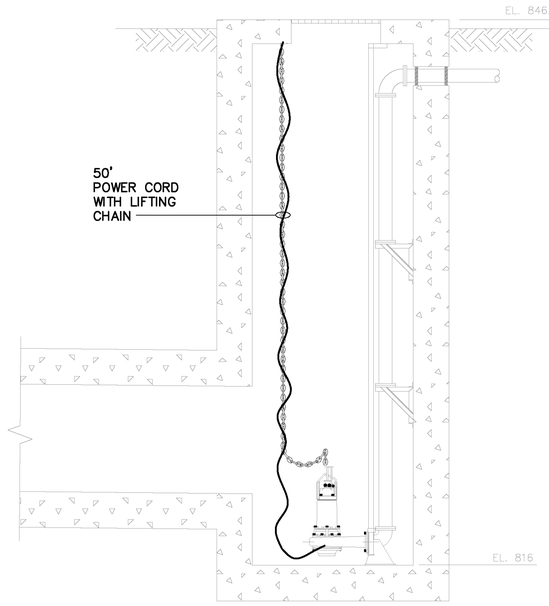

B PS-16 **PUMP WELL SECTION**
SCALE: 1/4"=1'-0"

ASBUILT
BID NO. 7185
COMPLETION DATE 03/25/2016
R.E. NAME DAVID HATCH

40' 0' 40' 80'
SCALE: 1"=40'

DIGALERT
DIAL TOLL FREE
1-800-422-4133
AT LEAST TWO DAYS BEFORE YOU DIG
UNDERGROUND SERVICE ALERT OF SOUTHERN CALIFORNIA

MOFFATT & NICHOL
3780 KILROY AIRPORT WAY, SUITE 600
LONG BEACH, CALIFORNIA, 90806
562-426-9551

DATE

REGISTERED PROFESSIONAL ENGINEER
TYLER W. SPARKS
No. E16039
EXP. 9/30/13
ELECTRICAL
STATE OF CALIFORNIA

MARK	REVISIONS	APPR.	DATE

DESIGNED BY RW DRAWN BY TP CHECKED BY MSN

UPRR BRIDGE 55.54 LOS ANGELES SUB

CITY OF RIVERSIDE, CALIFORNIA
PUBLIC WORKS DEPARTMENT

RIVERSIDE AVE UNDERPASS

ELEVATION & PLAN PS-16

HORIZ. SCALE: AS SHOWN VERT. SCALE: AS SHOWN

ACCT. NO. -
W.O. NO. -

D-866

SHEET 70 OF 146

FILE NO.

DRAWING NAME: \\retopplb02\lb_projects\8318 lb13\CADD\Sheet\PUMP STATION\635501PS016.dwg
PLOT DATE: Sep 27, 2016 - 9:26am PLOTTED BY: dleigh

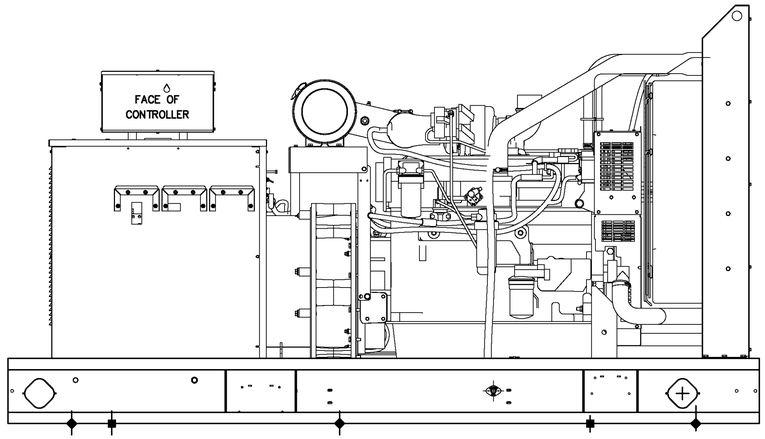

PROVIDE OUTDOOR
WEATHERPROOF ENCLOSURE
(NOT SHOWN)

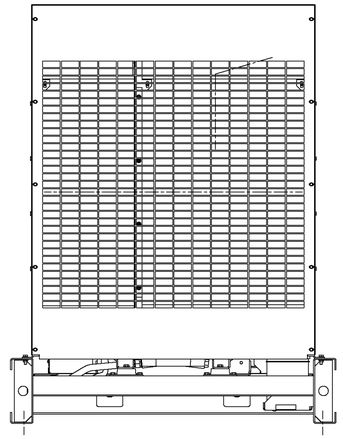

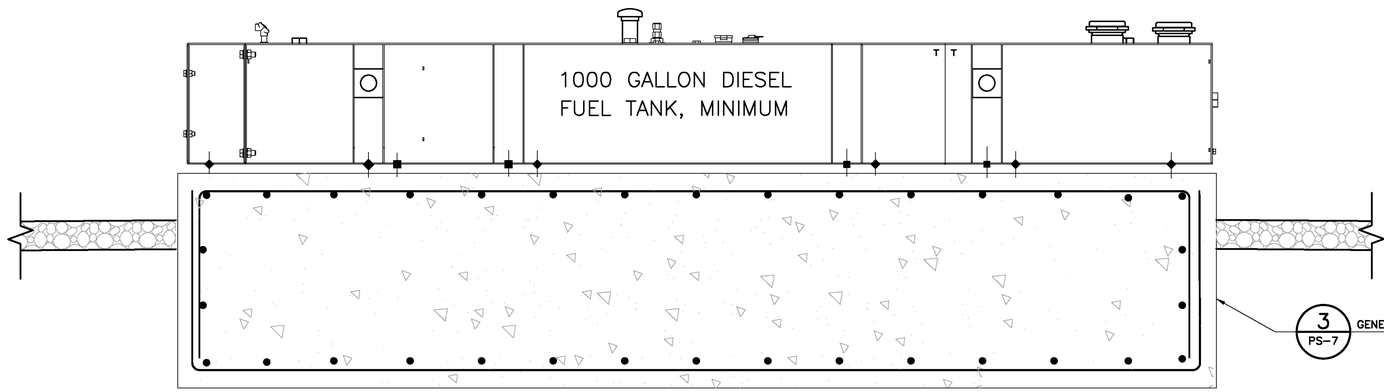

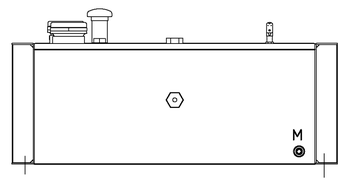

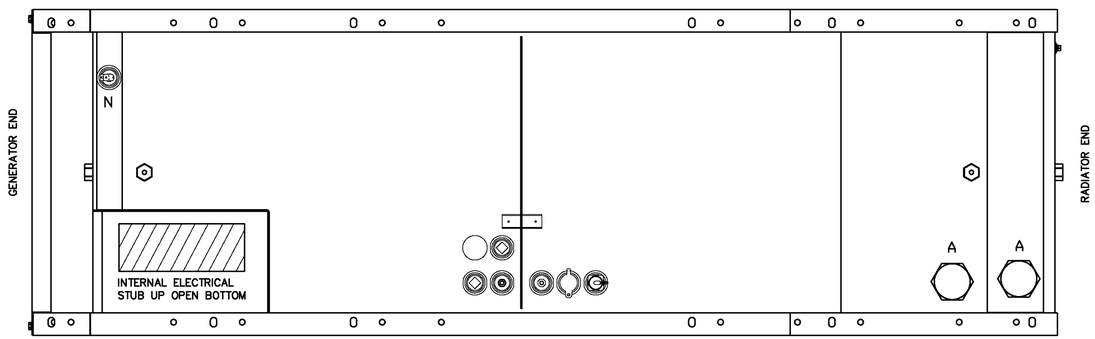

1 PS-17 DIESEL GENERATOR
NOT TO SCALE

ASBUILT

BID NO. 7185

COMPLETION DATE 03/25/2016

R.E. NAME DAVID HATCH

UPRR BRIDGE 55.54 LOS ANGELES SUB

DIGALERT
DIAL TOLL FREE
1-800-422-4133
AT LEAST TWO DAYS
BEFORE YOU DIG
UNDERGROUND SERVICE ALERT OF SOUTHERN CALIFORNIA

MOFFATT & NICHOL
3780 KILROY AIRPORT WAY, SUITE 600
LONG BEACH, CALIFORNIA, 90806
562-426-9551

DATE

REGISTERED PROFESSIONAL ENGINEER
TYLER W. SPARKS
No. E16039
EXP. 9/30/13
ELECTRICAL
STATE OF CALIFORNIA

MARK	REVISIONS	APPR.	DATE

DESIGNED BY RW DRAWN BY TP CHECKED BY MSN

CITY OF RIVERSIDE, CALIFORNIA
PUBLIC WORKS DEPARTMENT

RIVERSIDE AVE UNDERPASS

GENERATOR PLAN & DETAILS PS-17

HORIZ. SCALE: AS SHOWN VERT. SCALE: AS SHOWN

ACCT. NO. -
W.O. NO. -

D-866

SHEET 71 OF 146

FILE NO.

DRAWING NAME: \\retopplb02\lb_projects\6318 lb13\CADD\Sheet\PUMP STATION\635501PS017.dwg
PLOT DATE: Sep 27, 2016 - 9:27am PLOTTED BY: dhigh

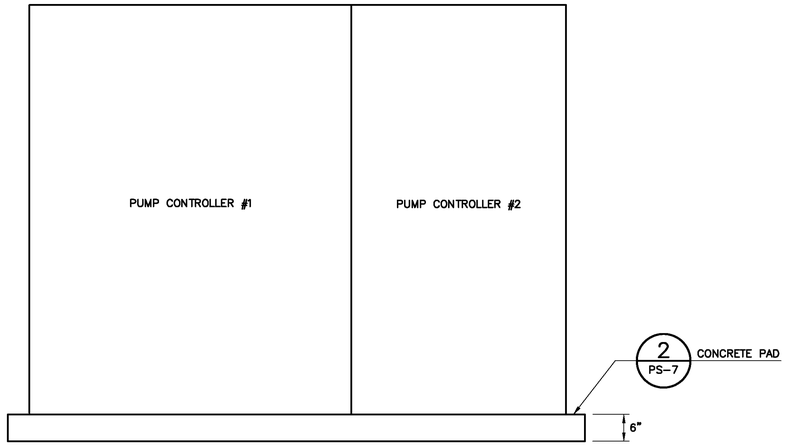

PUMP CONTROLLER ELEVATION
NOT TO SCALE

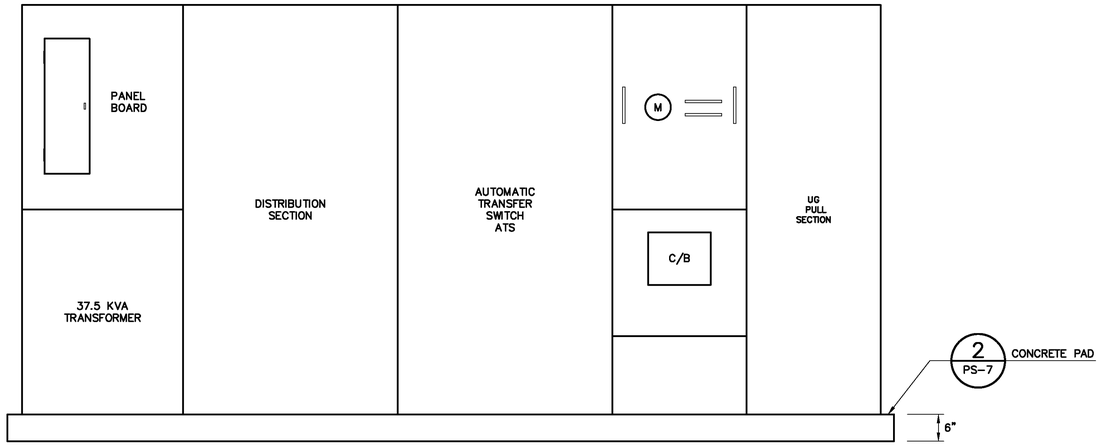

MAIN SWITCHBOARD MS ELEVATION
NOT TO SCALE

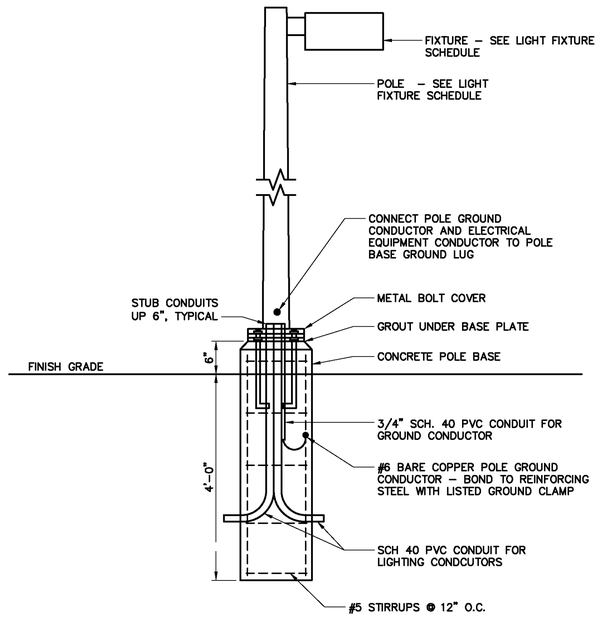

1 PS-18 LIGHT POLE AND BASE DETAIL
NOT TO SCALE

ASBUILT

BID NO. 7185
COMPLETION DATE 03/25/2016
R.E. NAME DAVID HATCH

DRAWING NAME: \\netapp1b02\lb_projects\6318 lb13\CADD\Sheet\PUMP STATION\635501PS018.dwg
PLOT DATE: Sep 27, 2016 - 9:24am PLOTTED BY: dleigh

DIGALERT
DIAL TOLL FREE
1-800-422-4133
AT LEAST TWO DAYS BEFORE YOU DIG
UNDERGROUND SERVICE ALERT OF SOUTHERN CALIFORNIA

MOFFATT & NICHOL
3780 KILROY AIRPORT WAY, SUITE 600
LONG BEACH, CALIFORNIA, 90806
562-426-9551

DATE

REGISTERED PROFESSIONAL ENGINEER
TYLER W. SPARKS
No. E16039
EXP. 9/30/13
ELECTRICAL
STATE OF CALIFORNIA

MARK	REVISIONS	APPR.	DATE

DESIGNED BY RW DRAWN BY TP CHECKED BY MSN

UPRR BRIDGE 55.54 LOS ANGELES SUB

CITY OF RIVERSIDE, CALIFORNIA
PUBLIC WORKS DEPARTMENT

RIVERSIDE AVE UNDERPASS

ELECTRICAL DETAILS PS-18

HORIZ. SCALE: AS SHOWN VERT. SCALE: AS SHOWN

ACCT. NO. -
W.O. NO. -

D-866

SHEET 72 OF 146

FILE NO.

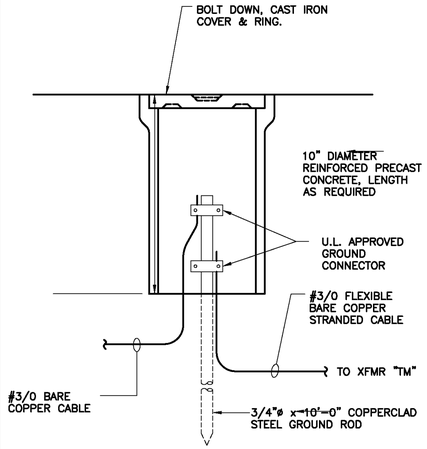

1 PS-19 **GROUND WELL DETAIL**
NOT TO SCALE

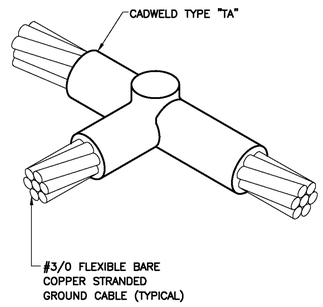

2 PS-19 **HORIZONTAL TEE GROUND CONNECTION DETAIL**
NOT TO SCALE

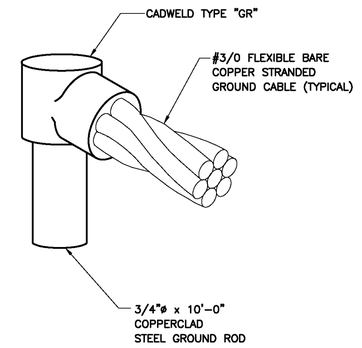

3 PS-19 **GROUND ROD CONNECTION DETAIL**
NOT TO SCALE

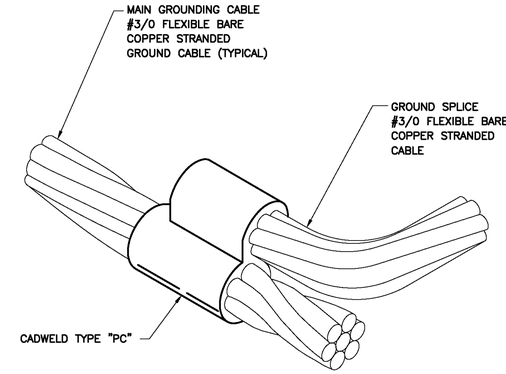

4 PS-19 **PARALLEL GROUND TAP CONNECTION DETAIL**
NOT TO SCALE

FIXTURE SCHEDULE

FIXTURE TYPE	LAMP			VOLTS	MOUNTING		MANUFACTURER	NOTE
	TYPE	NO.	WATTS		TYPE	HEIGHT		
A	HPS	1	150	240	POLE	16'-0"	LITHONIA AS1 150S SR4SC 240 SPA PER PE1 AS1VG	1,2
B	HPS	1	150	240	POLE	16'-0"	LITHONIA AS1 150S SR5S 240 SPA PER PE1 AS1VG	1,2
–							POLE – LITHONIA SSS 16 4C	3,4

LAMP TYPES: F = FLUORESCENT; CF = COMPACT FLOURESCNET; INC = INCANDESCENT; HPS = HIGH PRESSURE SODIUM; MH = METAL HALIDE; LED = LIGHT EMITTING DIODE

NOTE:
1. PROVIDE FIXTURE WITH TWIST LOCK RECEPTACLE AND TWIST LOCK PHOTOCELL.
2. PROVIDE FIXTURE WITH POLYCARBONATE VANDAL RESISTANT GUARD OVER LENS.
3. PROVIDE POLE COMPLETE WITH ANCHOR BOLTS, BASE COVER, HAND HOLE , GROUND LUG AND FIXTURE MOUNTING HARDWARE.
4. POLE COLOR TO MATCH LIGHT FIXTURE.

ASBUILT
BID NO. 7185
COMPLETION DATE 03/25/2016
R.E. NAME DAVID HATCH

DRAWING NAME: \\retroplib02\lb_projects\6318 lb13\CADD\Sheet\PUMP STATION\635501PS019.dwg
PLOT DATE: Sep 27, 2016 - 9:27am PLOTTED BY: dleigh

DIGALERT
DIAL TOLL FREE
1-800-422-4133
AT LEAST TWO DAYS BEFORE YOU DIG
UNDERGROUND SERVICE ALERT OF SOUTHERN CALIFORNIA

MOFFATT & NICHOL
3780 KILROY AIRPORT WAY, SUITE 600
LONG BEACH, CALIFORNIA, 90806
562-426-9551

DATE _____

REGISTERED PROFESSIONAL ENGINEER TYLER W. SPARKS No. E16039 EXP. 9/30/13 ELECTRICAL STATE OF CALIFORNIA

MARK	REVISIONS	APPR.	DATE

DESIGNED BY RW DRAWN BY TP CHECKED BY MSN

UPRR BRIDGE 55.54 LOS ANGELES SUB

CITY OF RIVERSIDE, CALIFORNIA
PUBLIC WORKS DEPARTMENT

RIVERSIDE AVE UNDERPASS

ELECTRICAL DETAILS PS-19

HORIZ. SCALE: AS SHOWN VERT. SCALE: AS SHOWN

ACCT. NO. –
W.O. NO. –

D-866

SHEET 73 OF 146

FILE NO.

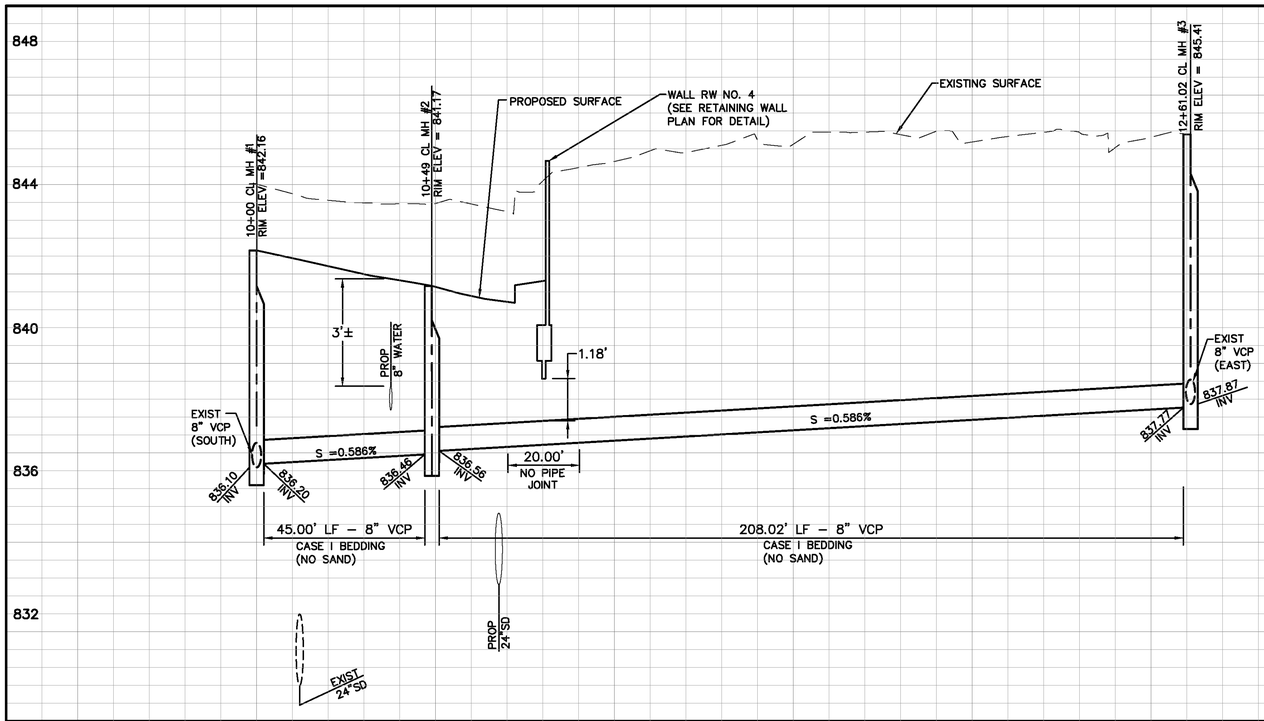

HORIZ. SCALE: 1"= 20'
VERT. SCALE: 1" = 2'

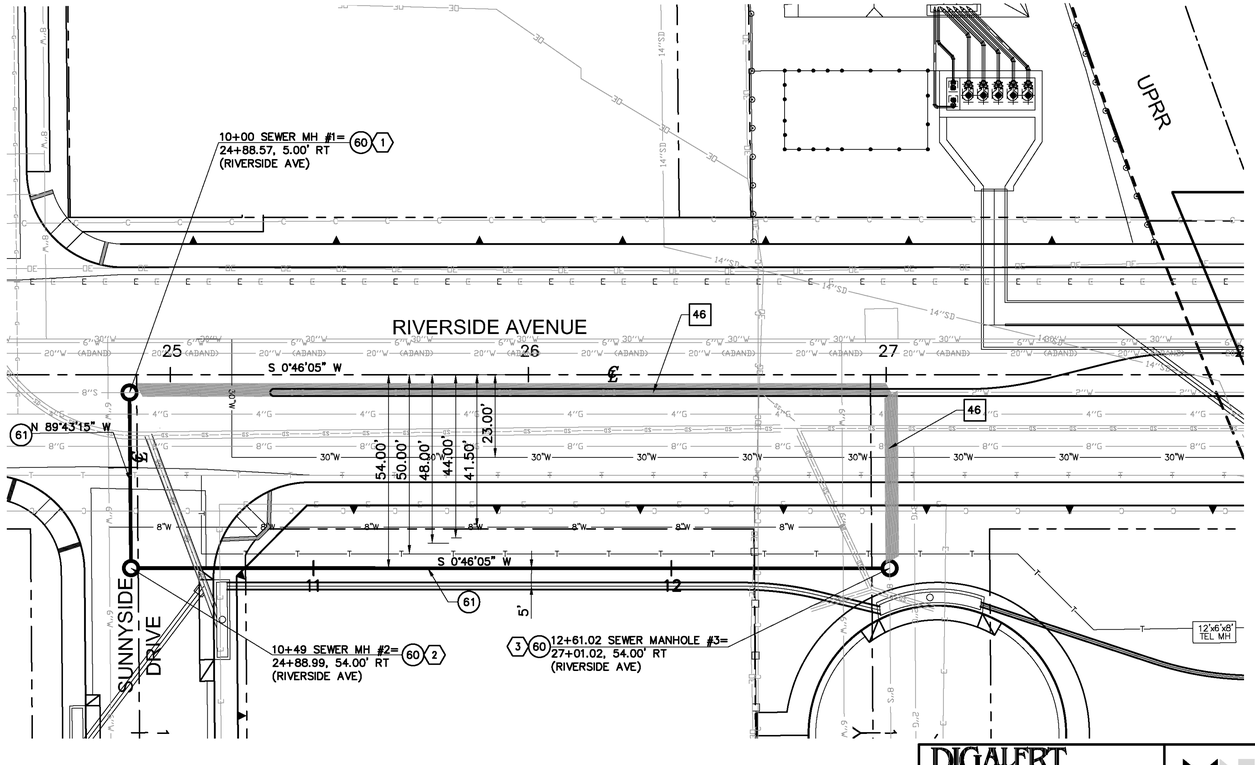

GENERAL NOTES:

1. CONSTRUCTION SHALL BE IN ACCORDANCE WITH THE CITY OF RIVERSIDE STANDARD DRAWINGS AND STANDARD SPECIFICATIONS FOR PUBLIC WORKS CONSTRUCTION, CURRENT EDITION.
2. EXISTING UTILITIES SHOWN ON THIS PLAN ARE PLOTTED FROM PUBLIC RECORDS. THE CONTRACTOR IS REQUIRED TO TAKE DUE PRECAUTIONARY MEASURES TO LOCATE AND PROTECT ALL UTILITIES WHETHER OR NOT SHOWN ON THIS PLAN.
3. CONTRACTOR SHALL POTHOLE AND VERIFY ALL LOCATIONS AND ELEVATIONS OF UTILITIES PRIOR TO THE START OF CONSTRUCTION TO ELIMINATE INTERFERENCE WITH NEW CONSTRUCTION.
4. ALL ELEVATIONS SHOWN ON THIS PLAN SHALL BE STAKE IN THE FIELD.
5. BACKFILLING OF TRENCH AND PAVEMENT REPLACEMENT SHALL BE DONE PER CITY OF RIVERSIDE STANDARD DRAWING 453.
6. ANY WORK THAT WILL CAUSE DAMAGE TO THE DETECTOR LOOPS SHALL NOT BE PERFORMED UNTIL TRAFFIC SIGNAL MAINTENANCE PERSONNEL HAVE BEEN NOTIFIED AND THE NECESSARY TIMING ADJUSTMENTS ARE MADE TO MAINTAIN SIGNAL OPERATION.
7. CONTRACTOR SHALL RELOCATE ALL TRAFFIC SIGNS, REMOVED DUE TO CONSTRUCTION PER CITY STANDARDS.

CONSTRUCTION NOTES:

(60) CONSTRUCT PRECAST CONCRETE SEWER MANHOLE PER CITY OF RIVERSIDE STD. PLAN NO. 500.

(61) CONSTRUCT 8" VCP SEWER MAIN.

REMOVAL NOTES:

[46] REMOVE EXISTING 8" SEWER LINE

COORDINATES		
⬡	NORTHING	EASTING
1	2293641.74	6216595.75
2	2293641.50	6216644.75
3	2293853.50	6216647.59

ASBUILT

BID NO. 7185

COMPLETION DATE 03/25/2016

R.E. NAME DAVID HATCH

20' 0' 20' 40'

SCALE: 1"=20'

UPRR BRIDGE 55.54 LOS ANGELES SUB

DIGALERT
DIAL TOLL FREE
1-800-422-4133
AT LEAST TWO DAYS BEFORE YOU DIG
UNDERGROUND SERVICE ALERT OF SOUTHERN CALIFORNIA

MOFFATT & NICHOL
3780 KILROY AIRPORT WAY, SUITE 600
LONG BEACH, CALIFORNIA, 90806
562-426-9551

DATE

REGISTERED PROFESSIONAL ENGINEER
M.S. NICHOL
NO. C60129
EXP. 06/30/14
CIVIL
STATE OF CALIFORNIA

MARK	REVISIONS	APPR.	DATE

DESIGNED BY RW DRAWN BY TP CHECKED BY MSN

CITY OF RIVERSIDE, CALIFORNIA
PUBLIC WORKS DEPARTMENT

RIVERSIDE AVE UNDERPASS

SANITARY SEWER PLAN & PROFILE SS-1

HORIZ. SCALE: AS SHOWN VERT. SCALE: AS SHOWN

ACCT. NO. –
W.O. NO. –

S-2099

SHEET 74 OF 146

FILE NO.

DRAWING NAME: \\netappbi02\ib_projects\b318 ib13\CADD\Sheet\SEWER\635501SS001.dwg
PLOT DATE: Sep 27, 2016 - 9:12am PLOTTED BY: dleigh

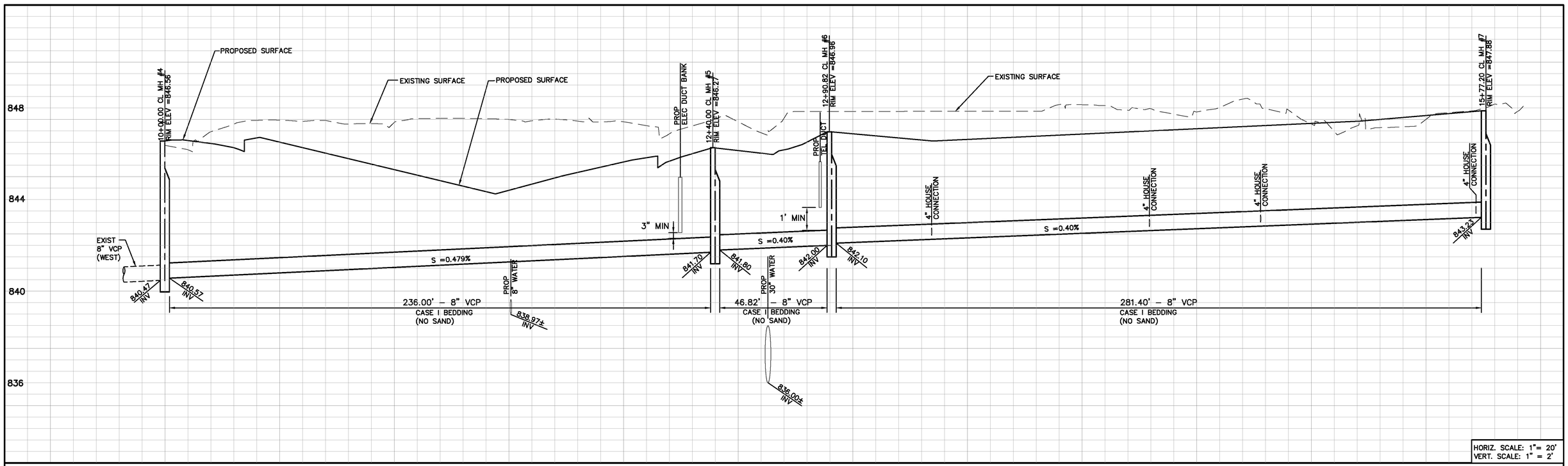

HORIZ. SCALE: 1"= 20'
VERT. SCALE: 1" = 2'

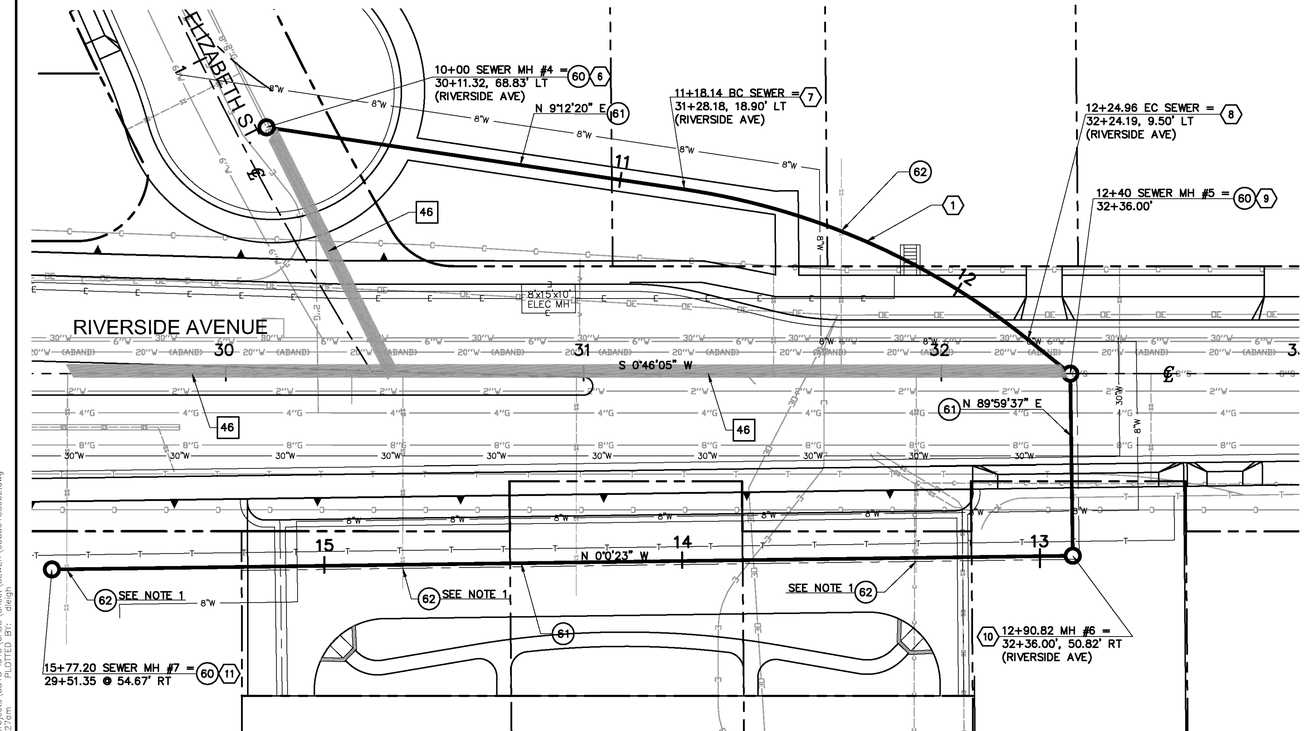

CONSTRUCTION NOTES:

(60) CONSTRUCT PRECAST CONCRETE SEWER MANHOLE PER CITY OF RIVERSIDE STD. PLAN NO. 500.

(61) CONSTRUCT 8" VCP SEWER MAIN.

(62) CONSTRUCT HOUSE CONNECTION PER RIVERSIDE STD PLAN NO 554.

REMOVAL NOTES:

[46] REMOVE EXISTING 8" SEWER LINE

CONTROL POINTS		
⬡	NORTHING	EASTING
(6)	2294165.43	6216528.93
(7)	2294282.05	6216547.83
(8)	2294377.48	6216591.11
(9)	2294389.17	6216600.76
(10)	2294389.17	6216651.59
(11)	2294103.81	6216651.62

CURVE DATA				
⬡	Δ	R (FT)	L (FT)	T (FT)
1	30°22'22"	200.00	106.02	54.29

NOTE:

1. CONTRACTOR TO VERIFY THE EXISTING SEWER LATERAL LOCATION AND ELEVATION TO THE REMOLDED APARTMENT BUILDING BEFORE RECONNECTING TO MAIN LINE.

ASBUILT

BID NO. 7185

COMPLETION DATE 03/25/2016

R.E. NAME DAVID HATCH

20' 0' 20' 40'

SCALE: 1"=20'

UPRR BRIDGE 55.54 LOS ANGELES SUB

DIGALERT
DIAL TOLL FREE
1-800-422-4133
AT LEAST TWO DAYS BEFORE YOU DIG
UNDERGROUND SERVICE ALERT OF SOUTHERN CALIFORNIA

MOFFATT & NICHOL
3780 KILROY AIRPORT WAY, SUITE 600
LONG BEACH, CALIFORNIA, 90806
562-426-9551

DATE

REGISTERED PROFESSIONAL ENGINEER
M.S. NICHOL
NO. C60129
EXP. 06/30/14
CIVIL
STATE OF CALIFORNIA

MARK	REVISIONS	APPR.	DATE

DESIGNED BY RW DRAWN BY TP CHECKED BY MSN

CITY OF RIVERSIDE, CALIFORNIA
PUBLIC WORKS DEPARTMENT

RIVERSIDE AVE UNDERPASS

SANITARY SEWER PLAN & PROFILE SS-2

HORIZ. SCALE: AS SHOWN VERT. SCALE: AS SHOWN

ACCT. NO. –
W.O. NO. –

S-2099

SHEET 75 OF 146

FILE NO.

DRAWING NAME: \\retopp1b02\b_projects\8318 lb13\CADD\Sheet\SEWER 635501SS002.dwg
PLOT DATE: Sep 27, 2016 - 9:27am PLOTTED BY: dhigh

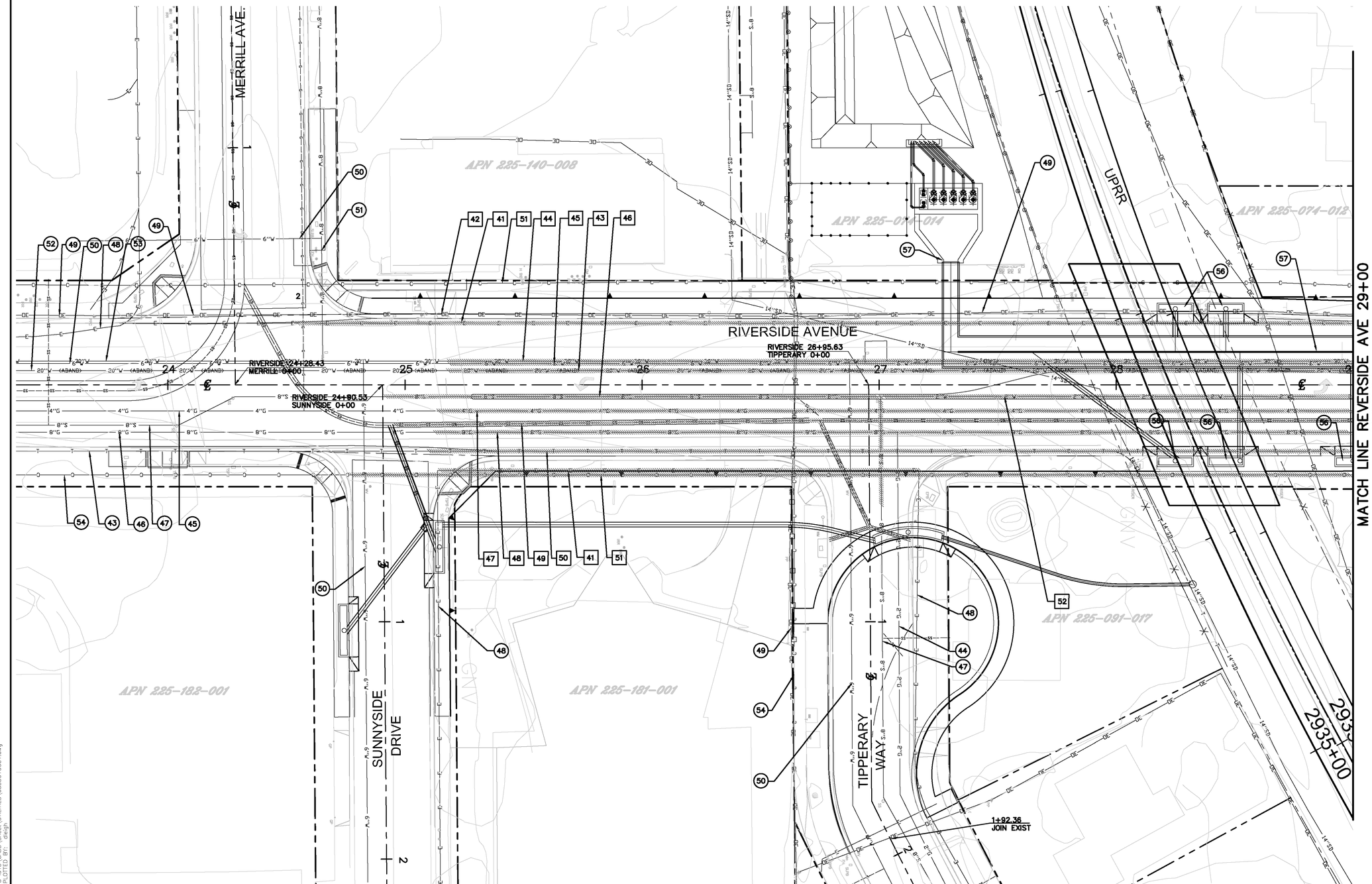

CONSTRUCTION NOTES

(43) PROTECT EXISTING TELEPHONE LINE
(44) PROTECT EXISTING 2" GAS LINE
(45) PROTECT EXISTING 4" GAS LINE
(46) PROTECT EXISTING 8" GAS LINE
(47) PROTECT EXISTING 8" SEWER LINE
(48) PROTECT EXISTING UNDERGROUND ELECTRICAL CONDUIT
(49) PROTECT EXISTING OVERHEAD ELECTRICAL LINE
(50) PROTECT EXISTING 6" WATER LINE
(51) PROTECT EXISTING 8" WATER LINE
(52) PROTECT EXISTING 20" WATER LINE
(53) PROTECT EXISTING 30" WATER LINE
(54) PROTECT EXISTING COMMUNICATION LINE
(55) CONSTRUCT 10" PVC STORM DRAIN PIPE (SEE STORM DRAIN PLAN)
(56) CONSTRUCT CATCH BASIN (SEE STORM DRAIN PLAN)
(57) CONSTRUCT RCB BOX CULVERT (SEE STORM DRAIN PLAN)

REMOVAL NOTES

41 REMOVE EXISTING UNDERGROUND ELECTRICAL CONDUIT
42 REMOVE EXISTING OVERHEAD ELECTRICAL LINE
43 REMOVE EXISTING 20" WATER LINE
44 REMOVE EXISTING 30" WATER LINE
45 REMOVE EXISTING 6" WATER LINE
46 REMOVE EXISTING 8" SEWER LINE
47 REMOVE EXISTING 4" GAS LINE
48 REMOVE EXISTING 8" GAS LINE
49 REMOVE EXISTING STORM DRAIN LINE
50 REMOVE EXISTING TELEPHONE LINE
51 REMOVE EXISTING COMMUNICATION LINE
52 REMOVE EXISTING 2" WATER LINE

20' 0' 20' 40'
SCALE: 1"=20'

NOTE:
1. FOR PROPOSED UTILITY INFORMATION, SEE CORRESPONDING SHEETS.

ASBUILT
BID NO. 7185
COMPLETION DATE 03/25/2016
R.E. NAME DAVID HATCH

DIGALERT
DIAL TOLL FREE
1-800-422-4133
AT LEAST TWO DAYS BEFORE YOU DIG
UNDERGROUND SERVICE ALERT OF SOUTHERN CALIFORNIA

MOFFATT & NICHOL
3780 KILROY AIRPORT WAY, SUITE 600
LONG BEACH, CALIFORNIA, 90806
562-426-9551

REGISTERED PROFESSIONAL ENGINEER
M.S. NICHOL
NO. C60129
EXP. 06/30/14
CIVIL
STATE OF CALIFORNIA

DATE

MARK	REVISIONS	APPR.	DATE

DESIGNED BY RW DRAWN BY TP CHECKED BY MSN

UPRR BRIDGE 55.54 LOS ANGELES SUB
CITY OF RIVERSIDE, CALIFORNIA
PUBLIC WORKS DEPARTMENT
RIVERSIDE AVE UNDERPASS
UTILITY DISPOSITION U-1
HORIZ. SCALE: AS SHOWN VERT. SCALE: AS SHOWN

ACCT. NO. –
W.O. NO. –
R-4240
SHEET 76 OF 146
FILE NO.

DRAWING NAME: \\netapp1b02\lb_projects\8318 (b13)\CADD\Sheet\UTILITIES\635501U001.dwg
PLOT DATE: Sep 27, 2016 - 9:27am PLOTTED BY: dleigh

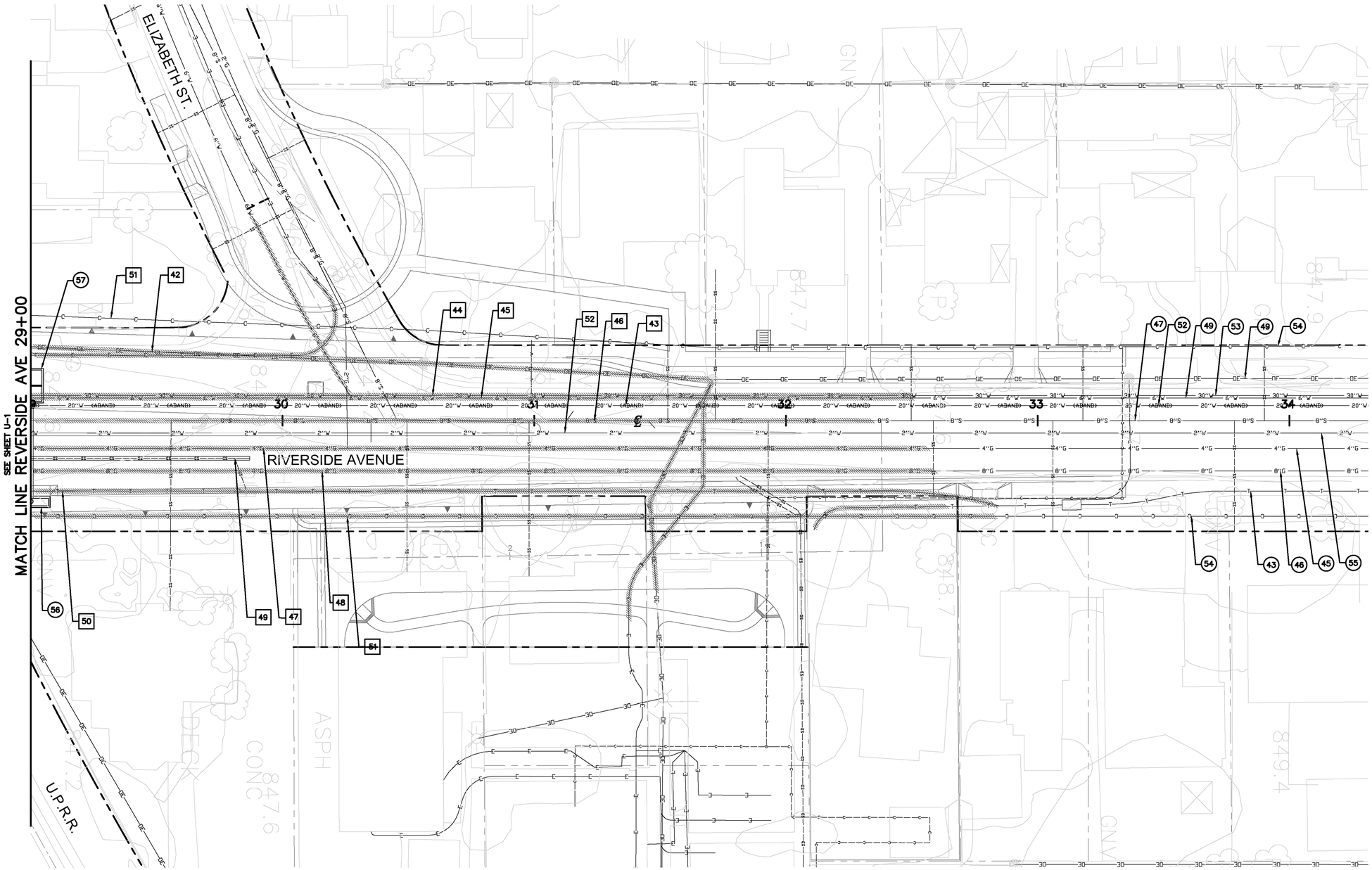

CONSTRUCTION NOTES

43 PROTECT EXISTING TELEPHONE LINE
44 PROTECT EXISTING 2" GAS LINE
45 PROTECT EXISTING 4" GAS LINE
46 PROTECT EXISTING 8" GAS LINE
47 PROTECT EXISTING 8" SEWER LINE
48 PROTECT EXISTING UNDERGROUND ELECTRICAL CONDUIT
49 PROTECT EXISTING OVERHEAD ELECTRICAL LINE
50 PROTECT EXISTING 6" WATER LINE
51 PROTECT EXISTING 8" WATER LINE
52 PROTECT EXISTING 20" WATER LINE
53 PROTECT EXISTING 30" WATER LINE
54 PROTECT EXISTING COMMUNICATION LINE
55 PROTECT EXISTING 2" WATER LINE
56 CONSTRUCT CATCH BASIN (SEE STORM DRAIN PLAN)
57 CONSTRUCT RCB BOX CULVERT (SEE STORM DRAIN PLAN)

REMOVAL NOTES

41 REMOVE EXISTING UNDERGROUND ELECTRICAL CONDUIT
42 REMOVE EXISTING OVERHEAD ELECTRICAL LINE
43 REMOVE EXISTING 20" WATER LINE
44 REMOVE EXISTING 30" WATER LINE
45 REMOVE EXISTING 6" WATER LINE
46 REMOVE EXISTING 8" SEWER LINE
47 REMOVE EXISTING 4" GAS LINE
48 REMOVE EXISTING 8" GAS LINE
49 REMOVE EXISTING STORM DRAIN LINE
50 REMOVE EXISTING TELEPHONE LINE
51 REMOVE EXISTING COMMUNICATION LINE
52 REMOVE EXISTING 2" WATER LINE

40' 0' 40' 80'
SCALE: 1"=40'

NOTE:

1. FOR PROPOSED UTILITY INFORMATION, SEE CORRESPONDING SHEETS.

ASBUILT

BID NO. 7185
COMPLETION DATE 03/25/2016
R.E. NAME DAVID HATCH

DIGALERT
DIAL TOLL FREE
1-800-422-4133
AT LEAST TWO DAYS BEFORE YOU DIG
UNDERGROUND SERVICE ALERT OF SOUTHERN CALIFORNIA

MOFFATT & NICHOL
3780 KILROY AIRPORT WAY, SUITE 600
LONG BEACH, CALIFORNIA, 90806
562-426-9551

DATE

REGISTERED PROFESSIONAL ENGINEER
M.S. NICHOL
NO. C60129
EXP. 06/30/14
CIVIL
STATE OF CALIFORNIA

MARK	REVISIONS	APPR.	DATE

DESIGNED BY RW DRAWN BY TP CHECKED BY MSN

UPRR BRIDGE 55.54 LOS ANGELES SUB

CITY OF RIVERSIDE, CALIFORNIA
PUBLIC WORKS DEPARTMENT

RIVERSIDE AVE UNDERPASS

UTILITY DISPOSITION U-2

HORIZ. SCALE: AS SHOWN VERT. SCALE: AS SHOWN

ACCT. NO. -
W.O. NO. -

R-4240

SHEET 77 OF 146

FILE NO.

DRAWING NAME: \\metroplab02\lb_projects\6318 lb13\CADD\Sheet\UTILITIES\635501U002.dwg
PLOT DATE: Sep 27, 2016 - 9:27am PLOTTED BY: dleigh

TRINITY CT.

CONSTRUCTION NOTES

43 PROTECT EXISTING TELEPHONE LINE
44 PROTECT EXISTING 2" GAS LINE
45 PROTECT EXISTING 4" GAS LINE
46 PROTECT EXISTING 8" GAS LINE
47 PROTECT EXISTING 8" SEWER LINE
48 PROTECT EXISTING UNDERGROUND ELECTRICAL CONDUIT
49 PROTECT EXISTING OVERHEAD ELECTRICAL LINE
50 PROTECT EXISTING 6" WATER LINE
51 PROTECT EXISTING 8" WATER LINE
52 PROTECT EXISTING 20" WATER LINE
53 PROTECT EXISTING 30" WATER LINE
54 PROTECT EXISTING COMMUNICATION LINE
55 PROTECT EXISTING 2" WATER LINE

REMOVAL NOTES

41 REMOVE EXISTING UNDERGROUND ELECTRICAL CONDUIT
42 REMOVE EXISTING OVERHEAD ELECTRICAL LINE
43 REMOVE EXISTING 20" WATER LINE
44 REMOVE EXISTING 30" WATER LINE
45 REMOVE EXISTING 6" WATER LINE
46 REMOVE EXISTING 8" SEWER LINE
47 REMOVE EXISTING 4" GAS LINE
48 REMOVE EXISTING 8" GAS LINE
49 REMOVE EXISTING STORM DRAIN LINE
50 REMOVE EXISTING TELEPHONE LINE
51 REMOVE EXISTING COMMUNICATION LINE
52 REMOVE EXISTING 2" WATER LINE
53 REMOVE EXISTING SEWER LATERAL

ASBUILT

BID NO. 7185
COMPLETION DATE 03/25/2016
R.E. NAME DAVID HATCH

20' 0' 20' 40'
SCALE: 1"=20'

UPRR BRIDGE 55.54 LOS ANGELES SUB

DIGALERT
DIAL TOLL FREE
1-800-422-4133
AT LEAST TWO DAYS BEFORE YOU DIG
UNDERGROUND SERVICE ALERT OF SOUTHERN CALIFORNIA

MOFFATT & NICHOL
3780 KILROY AIRPORT WAY, SUITE 600
LONG BEACH, CALIFORNIA, 90806
562-426-9551

DATE

REGISTERED PROFESSIONAL ENGINEER
M.S. NICHOL
NO. C60129
EXP. 06/30/14
CIVIL
STATE OF CALIFORNIA

MARK	REVISIONS	APPR.	DATE

DESIGNED BY RW DRAWN BY TP CHECKED BY MSN

CITY OF RIVERSIDE, CALIFORNIA
PUBLIC WORKS DEPARTMENT

RIVERSIDE AVE UNDERPASS

UTILITY DISPOSITION U-3

HORIZ. SCALE: AS SHOWN VERT. SCALE: AS SHOWN

ACCT. NO. -
W.O. NO. -

R-4240

SHEET 78 OF 146

FILE NO.

DRAWING NAME: \\netapp1b02\lb_projects\8318 lb13\CADD\Sheet\UTILITIES\635501U003.dwg
PLOT DATE: Sep 27, 2016 - 9:27am PLOTTED BY: dleigh

RIVERSIDE AVENUE

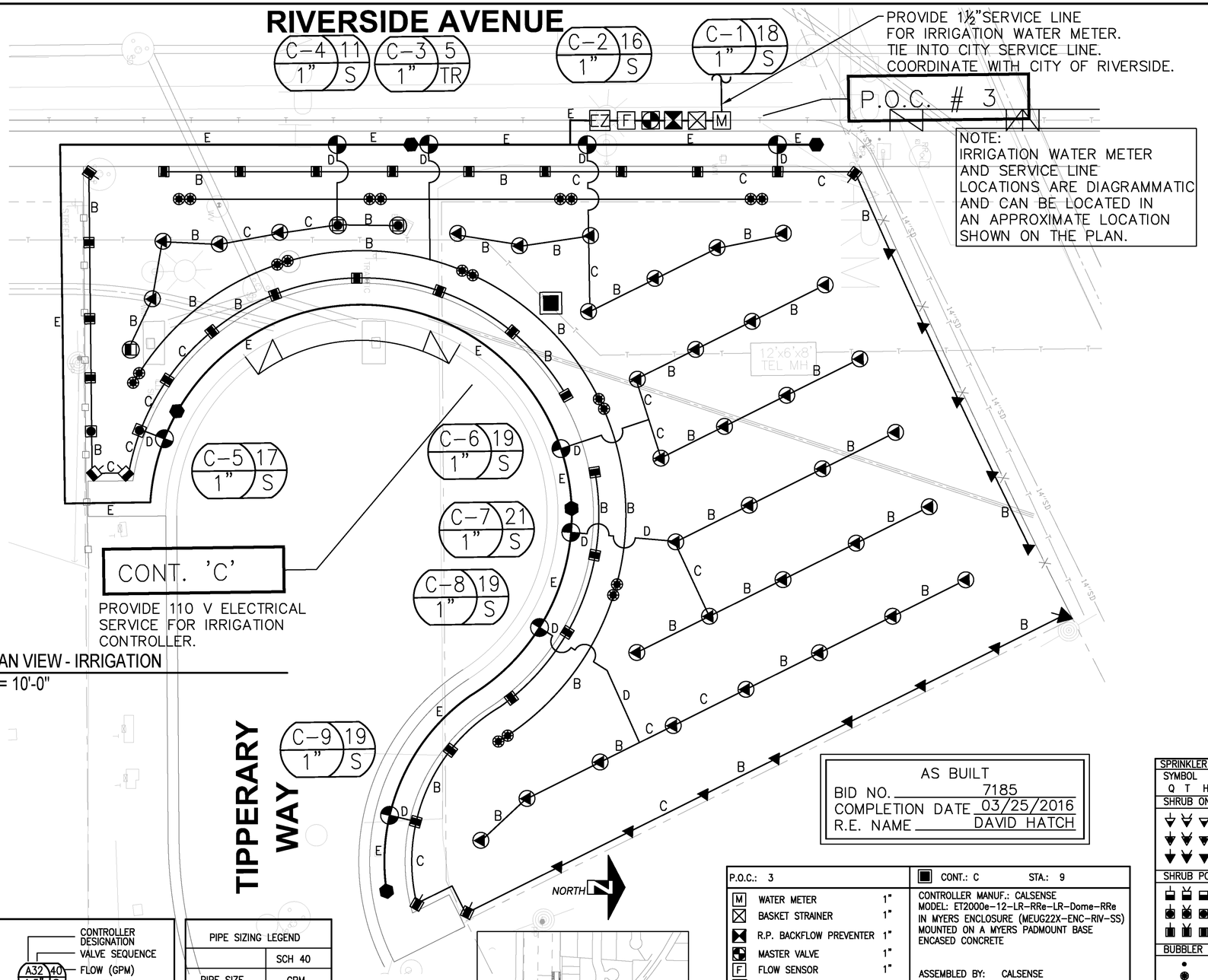

PLAN VIEW - IRRIGATION
1" = 10'-0"

AS BUILT
BID NO. 7185
COMPLETION DATE 03/25/2016
R.E. NAME DAVID HATCH

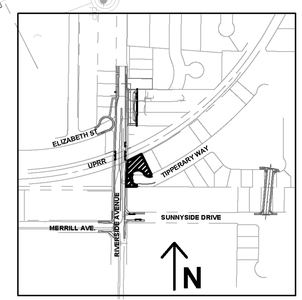

KEY MAP
N.T.S.

NOTE:
REFER TO CITY OF RIVERSIDE PUBLIC WORKS SPECIFICATIONS AND GUIDELINES TYPICAL DRAWINGS FOR IRRIGATION AND PLANTING DETAILS AND SPECIFICATIONS.

IRRIGATION EQUIPMENT LEGEND

SYMBOL	MANUF.	DESCRIPTION	CITY OF RIVERSIDE STANDARD DETAILS
■	CONTROLLER	REFER TO CITY OF RIVERSIDE PUBLIC WORKS DESIGN STANDARDS FOR EQUIPMENT MAKES AND MODEL	2018
M	WATER METER	REFER TO CITY OF RIVERSIDE PUBLIC WORKS DESIGN STANDARDS FOR EQUIPMENT MAKES AND MODEL	–
⊠	BASKET STRAINER	REFER TO CITY OF RIVERSIDE PUBLIC WORKS DESIGN STANDARDS FOR EQUIPMENT MAKES AND MODEL	–
⊠	R.P. BACKFLOW PREVENTER	REFER TO CITY OF RIVERSIDE PUBLIC WORKS DESIGN STANDARDS FOR EQUIPMENT MAKES AND MODEL	2002
◪	MASTER VALVE	REFER TO CITY OF RIVERSIDE PUBLIC WORKS DESIGN STANDARDS FOR EQUIPMENT MAKES AND MODEL	2007
F	FLOW SENSOR	REFER TO CITY OF RIVERSIDE PUBLIC WORKS DESIGN STANDARDS FOR EQUIPMENT MAKES AND MODEL	2007
EZ	EZ FLOW FERTILIZER INJECTOR	REFER TO CITY OF RIVERSIDE PUBLIC WORKS DESIGN STANDARDS FOR EQUIPMENT MAKES AND MODEL	2024
⋈	GATE VALVE	REFER TO CITY OF RIVERSIDE PUBLIC WORKS DESIGN STANDARDS FOR EQUIPMENT MAKES AND MODEL	2015
●	QUICK COUPLER	REFER TO CITY OF RIVERSIDE PUBLIC WORKS DESIGN STANDARDS FOR EQUIPMENT MAKES AND MODEL	2014
◔	REMOTE CONTROL VALVE	REFER TO CITY OF RIVERSIDE PUBLIC WORKS DESIGN STANDARDS FOR EQUIPMENT MAKES AND MODEL	2010
◔	DRIP REMOTE CONTROL VALVE	REFER TO CITY OF RIVERSIDE PUBLIC WORKS DESIGN STANDARDS FOR EQUIPMENT MAKES AND MODEL	2019
⊖	FLUSH VALVE	REFER TO CITY OF RIVERSIDE PUBLIC WORKS DESIGN STANDARDS FOR EQUIPMENT MAKES AND MODEL	2021
⊖	AIR RELEASE VALVE	REFER TO CITY OF RIVERSIDE PUBLIC WORKS DESIGN STANDARDS FOR EQUIPMENT MAKES AND MODEL	2020
—·—·—	DRIP TUBING	REFER TO CITY OF RIVERSIDE PUBLIC WORKS DESIGN STANDARDS FOR EQUIPMENT MAKES AND MODEL	2023
———	MAINLINE PIPE PURPLE P.V.C. SCHEDULE 40 FOR PIPE 2" SIZE AND SMALLER, CLASS 315 FOR PIPE 2 1/2" AND LARGER BURY 18" BELOW FINISH GRADE – SIZE PER PLAN		2001
———	LATERAL LINE PURPLE P.V.C. SCHEDULE 40 PIPE, BURY 12" BELOW FINISH GRADE SIZE PER PLAN		2001
- - - - - -	MAINLINE AND LATERAL SLEEVING CLASS 315 FOR 2" THROUGH 4", CLASS 200 FOR 6" AND ABOVE. SLEEVE PIPING SHALL BE MINIMUM 2X THE DIAMETER OF THE INSERTED MAINLINE OR LATERAL PIPING SIZE OTHERWISE NOTED ON PLAN. BURY 24" BELOW FINISH GRADE WIRE SLEEVE SHALL BE 4" CLASS 315 BURY 24" BELOW FINISH GRADE ALL MAINLINE SLEEVES SHALL BE ACCOMPANIED BY A WIRE SLEEVE		2003
WIRE	IRRIGATION CONTROLLER WIRE SHALL BE PAIGE ELECTRIC SERIES # 7079D DIRECT BURIAL 14 GAUGE WIRE.		2001

IRRIGATION NOTES:

1. THIS PLAN IS DIAGRAMMATIC. PIPING & VALVES SHOWN IN PAVED AREAS ARE TO BE INSTALLED IN LANDSCAPE AREAS WHEREVER POSSIBLE.
2. VERIFY POWER & WATER SOURCES WITH THE GENERAL CONTRACTOR. DO NOT INSTALL THE IRRIGATION SYSTEM AS SHOWN WHEN IT IS OBVIOUS THAT UNFORESEEN OBSTRUCTIONS, GRADE DIFFERENCES, OR DIFFERENCES IN AREA DIMENSIONS WOULD REQUIRE A CHANGE IN THE SYSTEM'S DESIGN. NOTIFY THE OWNER'S AUTHORIZED REPRESENTATIVE IMMEDIATELY UPON DISCOVERY OF ANY SUCH DISCREPANCIES.
3. COORDINATE PIPE & WIRE SLEEVE INSTALLATION WITH THE GENERAL CONTRACTOR.
4. LOCATE VALVE BOXES IN SHRUB AREAS WHENEVER POSSIBLE, OUT OF SIGHT OF PRIMARY VIEW.

SPRINKLER HEAD LEGEND

SYMBOL Q T H F	MANUFACTURE	MODEL		RAD.	PRESS.	ARC FLOW RATE				PRECIP.	CITY OF RIVERSIDE STANDARD DETAILS
SHRUB ON RISER		NOZZLE	BODY	FT	PSI	Q	T	H	F	in/hr	
	TORO PRECISION SERIES	0-T-8-(Q,T,H,F)	570S	8	30	.17	.22	.33	.66	1.0	2012
	TORO PRECISION SERIES	0-T-10-(Q,T,H,F)	570S	10	30	.23	.34	.51	1.03	1.0	
	TORO PRECISION SERIES	0-T-15-(Q,T,H,F)	570S	15	30	.58	.77	1.16	2.31	1.0	
SHRUB POP UP											
	TORO PRECISION SERIES	0-T-8-(Q,T,H,F)	570S	8	30	.17	.22	.33	.66	1.0	2013
	TORO PRECISION SERIES	0-T-10-(Q,T,H,F)	570S	10	30	.23	.34	.51	1.03	1.0	
	TORO PRECISION SERIES	0-T-15-(Q,T,H,F)	570S	15	30	.58	.77	1.16	2.31	1.0	
BUBBLER											
•	RAINBIRD	1401 (SHRUB) – ON RISER		3'	30	.25					2012
❀	RAINBIRD	RWS-M-B-1401 MINI-P (TREE)			30	.25					2011

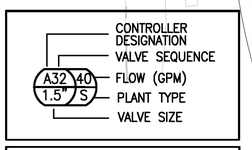

SLEEVE SIZING LEGEND	
	SCH 40
SLEEVE SIZE	PIPE SIZE
Ⓐ 2"	1/2" TO 1"
Ⓑ 3"	1 1/4" TO 1 1/2"
Ⓒ 4"	2"
Ⓓ 6"	2 1/2" TO 3"
MAINLINE AND WIRE SLEEVE COMBO	
Ⓔ ONE-6" + TWO-4"	

PIPE SIZING LEGEND		
		SCH 40
PIPE SIZE		GPM
B	3/4"	5 – 8
C	1"	9 – 13
D	1 1/4"	14 – 23
E	1 1/2"	24 – 30
F	2"	31 – 55

PLANT TYPE LEGEND	
SYM.	TYPE
S	SHRUBS
TR	TREE

P.O.C.: 3		CONT.: C STA.: 9
M	WATER METER 1"	CONTROLLER MANUF.: CALSENSE MODEL: ET2000e-12-LR-RRe-LR-Dome-RRe IN MYERS ENCLOSURE (MEUG22X-ENC-RIV-SS) MOUNTED ON A MYERS PADMOUNT BASE ENCASED CONCRETE
⊠	BASKET STRAINER 1"	
⊠	R.P. BACKFLOW PREVENTER 1"	
◪	MASTER VALVE 1"	
F	FLOW SENSOR 1"	ASSEMBLED BY: CALSENSE
EZ	EZ FLOW FERTILIZER INJECTOR	CONTACT: ERIN HAGEN (800) 572-8608
CONTRACTOR SHALL LOCATE AND VERIFY LOCATION OF WATER METER AND VERIFY STATIC PRESSURE PRIOR TO START OF WORK. NOTIFY LANDSCAPE ARCHITECT IF SITE PRESSURE IS BELOW DESIGN PRESSURE AND 15PSI OVER DESIGN PRESSURE:		CONTRACTOR TO VERIFY 120V ELECTRICAL POWER SERVICE WITH OWNER PRIOR START OF WORK. EXACT CONTROLLER LOCATION SHALL BE DETERMINED BY OWNER. CONTRACTOR SHALL OBTAIN CERTIFICATION FROM CALSENSE AND PROVIDE A COPY TO THE OWNER AND LANDSCAPE ARCHITECT PRIOR TO TURN OVER OF MAINTENANCE.
IRRIGATION SHALL BE INSTALLED FOR FUTURE CONVERSION TO RECYCLED WATER.		

IRRIGATION INSTALLATION NOTES

1. CONTRACTOR SHALL LOCATE VALVE BOXES IN SHRUB AREAS OUT OF PRIMARY VIEW, WHENEVER POSSIBLE.
2. CONTRACTOR SHALL INSTALL POP-UP TYPE HEADS ALONG ALL WALKS AND CURBS TYPICAL AND SHALL BE INSTALLED A MINIMUM OF 24" FROM HARDSCAPE EDGE.
3. CONTRACTOR SHALL ADJUST ALL SPRAYHEADS AND ROTOR HEADS TO AVOID OVERSPRAY ONTO ANY HARDSCAPE SURFACES (BUILDINGS, WALLS, WALKS, FENCES, ETC.) TYPICAL.

DIGALERT
DIAL TOLL FREE
1-800-422-4133
AT LEAST TWO DAYS BEFORE YOU DIG
UNDERGROUND SERVICE ALERT OF SOUTHERN CALIFORNIA

Lynn Capouya, Inc.
LANDSCAPE ARCHITECTS
17992 Mitchell South, Ste. 110
Irvine, CA 92614
www.lcapouya.com
PHONE: (949) 756-0150
FAX: (949) 756-1635
LICENSE #2314

REGISTERED LANDSCAPE ARCHITECT LYNN CAPOUYA NO. 2314 Signature 12/31/2012 Renewal Date Date STATE OF CALIFORNIA

MARK	REVISIONS	APPR.	DATE
⚠	AS BUILT		

DESIGNED BY - DRAWN BY - CHECKED BY -

UPRR BRIDGE 55.55 LOS ANGELES SUB

CITY OF RIVERSIDE, CALIFORNIA
PUBLIC WORKS DEPARTMENT

RIVERSIDE AVE UNDERPASS

IRRIGATION PLAN LP-1

HORIZ. SCALE: AS SHOWN VERT. SCALE: AS SHOWN

ACCT. NO. -
W.O. NO. -

R-4240

SHEET 79 OF 146

FILE NO.

DRAWING NAME: P:\8318_LB13\CADD\Sheet\LANDSCAPE\LP-1.dwg
PLOT DATE: - Sep 26, 2016 - 9:04am PLOTTED BY: - dhigh

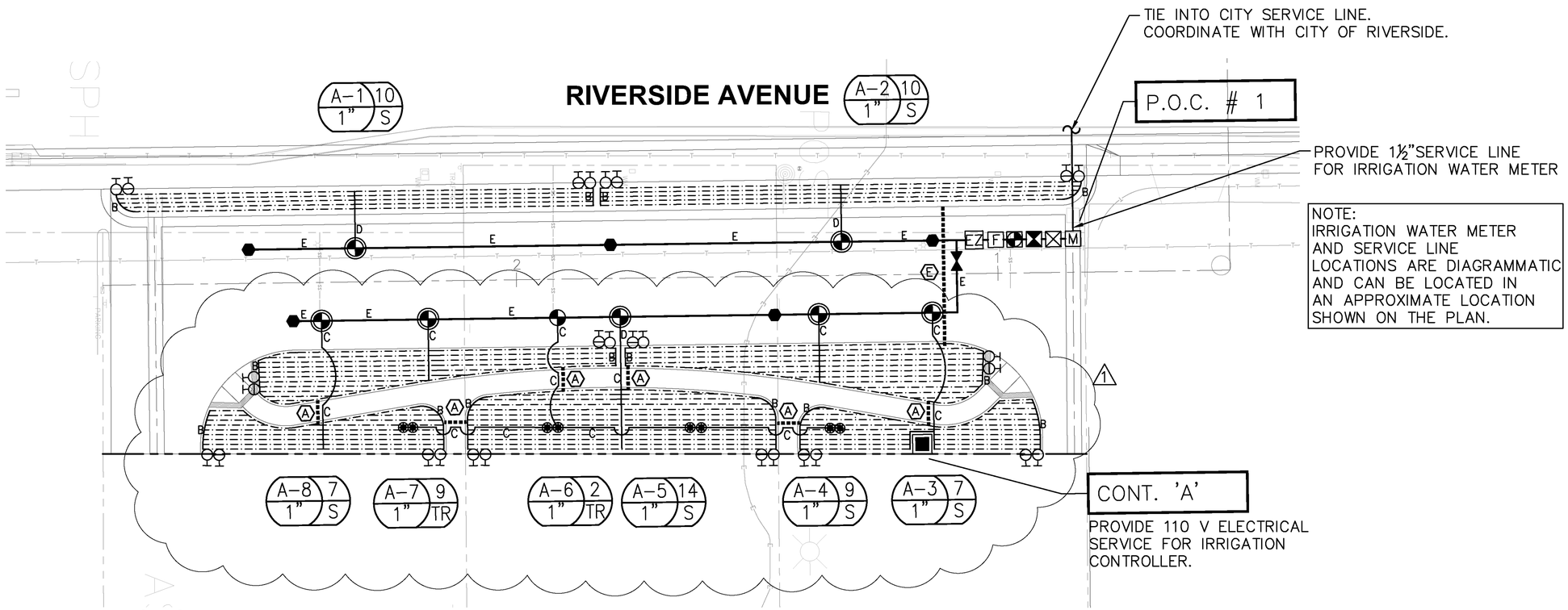

PLAN VIEW - IRRIGATION
1" = 10'-0"

CONTROLLER DESIGNATION
VALVE SEQUENCE
FLOW (GPM)
PLANT TYPE
VALVE SIZE
A32 40 / 1.5" S

SLEEVE SIZING LEGEND	
SLEEVE SIZE	SCH 40 PIPE SIZE
Ⓐ 2"	1/2" TO 1"
Ⓑ 3"	1 1/4" TO 1 1/2"
Ⓒ 4"	2"
Ⓓ 6"	2 1/2" TO 3"
MAINLINE AND WIRE SLEEVE COMBO	
Ⓔ ONE-6" + TWO-4"	

PIPE SIZING LEGEND		
PIPE SIZE		SCH 40 GPM
B	3/4"	5 – 8
C	1"	9 – 13
D	1 1/4"	14 – 23
E	1 1/2"	24 – 30
F	2"	31 – 55

PLANT TYPE LEGEND	
SYM.	TYPE
S	SHRUBS
TR	TREE

P.O.C.: 1		CONT.: A STA.: 6
M	WATER METER 1"	CONTROLLER MANUF.: CALSENSE
	BASKET STRAINER 1"	MODEL: ET2000e-12-LR-RRe-LR-Dome-RRe
	R.P. BACKFLOW PREVENTER 1"	IN MYERS ENCLOSURE (MEUG22X-ENC-RIV-SS)
	MASTER VALVE 1"	MOUNTED ON A MYERS PADMOUNT BASE
F	FLOW SENSOR 1"	ENCASED CONCRETE
EZ	EZ FLOW FERTILIZER INJECTOR	ASSEMBLED BY: CALSENSE
		CONTACT: ERIN HAGEN (800) 572-8608
CONTRACTOR SHALL LOCATE AND VERIFY LOCATION OF WATER METER AND VERIFY STATIC PRESSURE PRIOR TO START OF WORK. NOTIFY LANDSCAPE ARCHITECT IF SITE PRESSURE IS BELOW DESIGN PRESSURE AND 15PSI OVER DESIGN PRESSURE:		CONTRACTOR TO VERIFY 120V ELECTRICAL POWER SERVICE WITH OWNER PRIOR START OF WORK. EXACT CONTROLLER LOCATION SHALL BE DETERMINED BY OWNER. CONTRACTOR SHALL OBTAIN CERTIFICATION FROM CALSENSE AND PROVIDE A COPY TO THE OWNER AND LANDSCAPE ARCHITECT PRIOR TO TURN OVER OF MAINTENANCE.
IRRIGATION SHALL BE INSTALLED FOR FUTURE CONVERSION TO RECYCLED WATER.		

NORTH

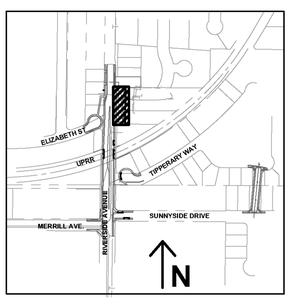

KEY MAP
N.T.S.

AS BUILT
BID NO. 7185
COMPLETION DATE 03/25/2016
R.E. NAME DAVID HATCH

IRRIGATION INSTALLATION NOTES

1. CONTRACTOR SHALL LOCATE VALVE BOXES IN SHRUB AREAS OUT OF PRIMARY VIEW, WHENEVER POSSIBLE.
2. CONTRACTOR SHALL INSTALL POP-UP TYPE HEADS ALONG ALL WALKS AND CURBS TYPICAL AND SHALL BE INSTALLED A MINIMUM OF 24" FROM HARDSCAPE EDGE.
3. CONTRACTOR SHALL ADJUST ALL SPRAYHEADS AND ROTOR HEADS TO AVOID OVERSPRAY ONTO ANY HARDSCAPE SURFACES (BUILDINGS, WALLS, WALKS, FENCES, ETC.) TYPICAL.

NOTE:
REFER TO CITY OF RIVERSIDE PUBLIC WORKS SPECIFICATIONS AND GUIDELINES TYPICAL DRAWINGS FOR IRRIGATION AND PLANTING DETAILS AND SPECIFICATIONS.

DIGALERT
DIAL TOLL FREE
1-800-422-4133
AT LEAST TWO DAYS BEFORE YOU DIG
UNDERGROUND SERVICE ALERT OF SOUTHERN CALIFORNIA

Lynn Capouya, Inc.
LANDSCAPE ARCHITECTS
17992 Mitchell South, Ste. 110
Irvine, CA 92614
www.lcapouya.com
PHONE: (949) 756-0150
FAX: (949) 756-1635
LICENSE #2314

REGISTERED LANDSCAPE ARCHITECT LYNN CAPOUYA NO. 2314 Signature 12/31/2012 Renewal Date Date STATE OF CALIFORNIA

MARK	REVISIONS	APPR.	DATE
1	AS BUILT		

DESIGNED BY - DRAWN BY - CHECKED BY -

UPRR BRIDGE 55.55 LOS ANGELES SUB
CITY OF RIVERSIDE, CALIFORNIA
PUBLIC WORKS DEPARTMENT
RIVERSIDE AVE UNDERPASS
IRRIGATION PLAN LP-2
HORIZ. SCALE: AS SHOWN VERT. SCALE: AS SHOWN

ACCT. NO. -
W.O. NO. -
R-4240
SHEET 80 OF 146
FILE NO.

DRAWING NAME: P:\8318_LB13\CADD\Sheet\LANDSCAPE\LP-2.dwg
PLOT DATE: Sep 26, 2016 - 8:04am PLOTTED BY: dleigh

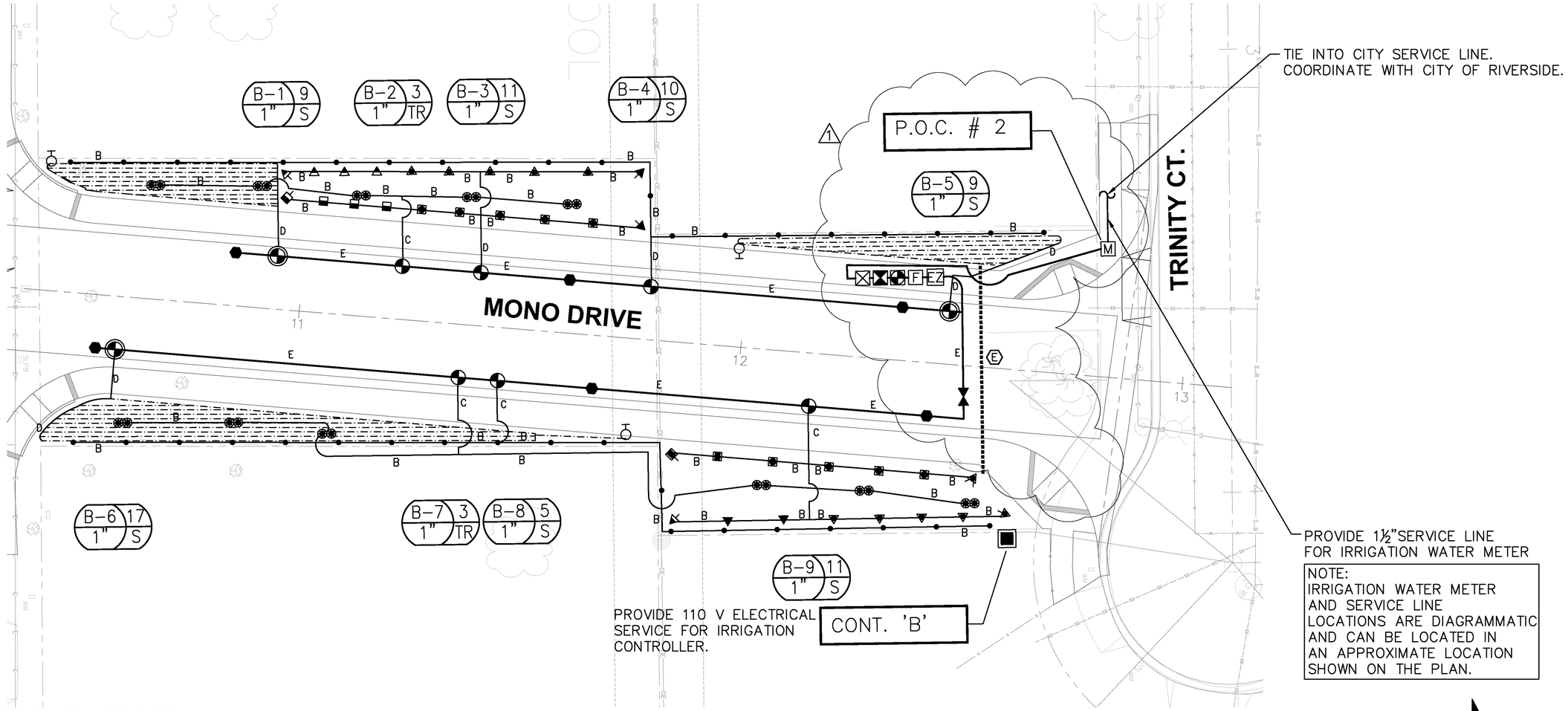

PLAN VIEW - IRRIGATION
1" = 10'-0"

CONTROLLER DESIGNATION
VALVE SEQUENCE
A32 40 — FLOW (GPM)
1.5" S — PLANT TYPE
VALVE SIZE

SLEEVE SIZING LEGEND	
	SCH 40
SLEEVE SIZE	PIPE SIZE
Ⓐ 2"	1/2" TO 1"
Ⓑ 3"	1 1/4" TO 1 1/2"
Ⓒ 4"	2"
Ⓓ 6"	2 1/2" TO 3"
MAINLINE AND WIRE SLEEVE COMBO	
Ⓔ ONE-6" + TWO-4"	

PIPE SIZING LEGEND		
		SCH 40
PIPE SIZE		GPM
B	3/4"	5 – 8
C	1"	9 – 13
D	1 1/4"	14 – 23
E	1 1/2"	24 – 30
F	2"	31 – 55

PLANT TYPE LEGEND	
SYM.	TYPE
S	SHRUBS
TR	TREE

VALVE SIZING LEGEND	
SIZE	GPM
1"	.25 – 20
1 1/2"	21–50
2"	51–75

P.O.C.: 2	CONT.: B STA.: 9
M WATER METER 1"	CONTROLLER MANUF.: CALSENSE MODEL: ET2000e–12–LR–RRe–LR–Dome–RRe IN MYERS ENCLOSURE (MEUG22X–ENC–RIV–SS) MOUNTED ON A MYERS PADMOUNT BASE ENCASED CONCRETE
BASKET STRAINER 1"	
R.P. BACKFLOW PREVENTER 1"	
MASTER VALVE 1"	
F FLOW SENSOR 1"	ASSEMBLED BY: CALSENSE
EZ EZ FLOW FERTILIZER INJECTOR	CONTACT: ERIN HAGEN (800) 572–8608 CONTRACTOR TO VERIFY 120V ELECTRICAL POWER SERVICE WITH OWNER PRIOR START OF WORK. EXACT CONTROLLER LOCATION SHALL BE DETERMINED BY OWNER. CONTRACTOR SHALL OBTAIN CERTIFICATION FROM CALSENSE AND PROVIDE A COPY TO THE OWNER AND LANDSCAPE ARCHITECT PRIOR TO TURN OVER OF MAINTENANCE.
CONTRACTOR SHALL LOCATE AND VERIFY LOCATION OF WATER METER AND VERIFY STATIC PRESSURE PRIOR TO START OF WORK. NOTIFY LANDSCAPE ARCHITECT IF SITE PRESSURE IS BELOW DESIGN PRESSURE AND 15PSI OVER DESIGN PRESSURE:	
IRRIGATION SHALL BE INSTALLED FOR FUTURE CONVERSION TO RECYCLED WATER.	

IRRIGATION INSTALLATION NOTES

1. CONTRACTOR SHALL LOCATE VALVE BOXES IN SHRUB AREAS OUT OF PRIMARY VIEW, WHENEVER POSSIBLE.
2. CONTRACTOR SHALL INSTALL POP–UP TYPE HEADS ALONG ALL WALKS AND CURBS TYPICAL AND SHALL BE INSTALLED A MINIMUM OF 24" FROM HARDSCAPE EDGE.
3. CONTRACTOR SHALL ADJUST ALL SPRAYHEADS AND ROTOR HEADS TO AVOID OVERSPRAY ONTO ANY HARDSCAPE SURFACES (BUILDINGS, WALLS, WALKS, FENCES, ETC.) TYPICAL.

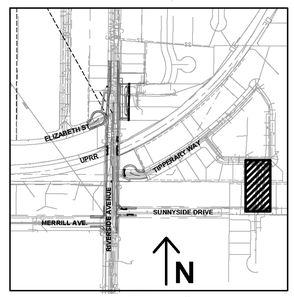

KEY MAP
N.T.S.

AS BUILT
BID NO. 7185
COMPLETION DATE 03/25/2016
R.E. NAME DAVID HATCH

NOTE:
REFER TO CITY OF RIVERSIDE PUBLIC WORKS SPECIFICATIONS AND GUIDELINES TYPICAL DRAWINGS FOR IRRIGATION AND PLANTING DETAILS AND SPECIFICATIONS.

DIGALERT
DIAL TOLL FREE 1-800-422-4133
AT LEAST TWO DAYS BEFORE YOU DIG
UNDERGROUND SERVICE ALERT OF SOUTHERN CALIFORNIA

Lynn Capouya, Inc.
LANDSCAPE ARCHITECTS
17992 Mitchell South, Ste. 110
Irvine, CA 92614
www.lcapouya.com
PHONE: (949) 756-0150
FAX: (949) 756-1635
LICENSE #2314

REGISTERED LANDSCAPE ARCHITECT LYNN CAPOUYA NO. 2314 Signature 12/31/2015 Renewal Date Date STATE OF CALIFORNIA

MARK	REVISIONS	APPR.	DATE
⚠	AS BUILT		

DESIGNED BY - DRAWN BY - CHECKED BY -

UPRR BRIDGE 55.55 LOS ANGELES SUB
CITY OF RIVERSIDE, CALIFORNIA
PUBLIC WORKS DEPARTMENT
RIVERSIDE AVE UNDERPASS
IRRIGATION PLAN LP–3
HORIZ. SCALE: AS SHOWN VERT. SCALE: AS SHOWN

ACCT. NO. -
W.O. NO. -
R–4240
SHEET 81 OF 146
FILE NO.

DRAWING NAME: P:\8318 LB13\CADD\Sheet\LANDSCAPE\LP–3.dwg
PLOT DATE: Sep 26, 2016 - 9:04am PLOTTED BY: dhegh

MERRILL AVE.

UPRR

RIVERSIDE AVENUE

87.00'

6.5'

SUNNYSIDE DRIVE

TIPPERARY WAY

SEE SHEET LP–1 AND LP–6 FOR IRRIGATION AND PLANTING

MATCHLINE SEE SHEET LP–5

LEGEND:

CONTRACTOR TO RESTORE LANDSCAPE TO ORIGINAL CONDITION.

3" LAYER OF MULCH AND STRAW WATTLES.

AC PAVEMENT. SEE SHEET 55

ROCK COBBLE BLANKET
SEE DETAIL ON SHEET 84,
SIZE: 4" TO 8"
COLOR: OASIS
AVAILABLE FROM:
DECORATIVE STONE SOLUTIONS
(800) 699–1878
WWW.DECORATIVESTONESOLUTIONS.COM
CONTRACTOR TO SUBMIT SAMPLE OF PROPOSED COBBLE FOR REVIEW AND APPROVAL BY CITY PRIOR TO CONSTRUCTION. FOLLOWING FOR APPROVAL OF COBBLE, CONTRACTOR SHALL PROVIDE 4'X4' DEMONSTRATION PANEL OF COBBLE PAVING FOR REVIEW AND APPROVAL BY CITY PRIOR TO PRODUCTION.

AS BUILT
BID NO. 7185
COMPLETION DATE 03/25/2016
R.E. NAME DAVID HATCH

NORTH

20' 0' 20' 40'
SCALE: 1"=20'

NOTE:

REFER TO CITY OF RIVERSIDE PUBLIC WORKS SPECIFICATIONS AND GUIDELINES TYPICAL DRAWINGS FOR IRRIGATION AND PLANTING DETAILS AND SPECIFICATIONS.

DIGALERT
DIAL TOLL FREE
1-800-422-4133
AT LEAST TWO DAYS BEFORE YOU DIG
UNDERGROUND SERVICE ALERT OF SOUTHERN CALIFORNIA

Lynn Capouya, Inc.
LANDSCAPE ARCHITECTS
17992 Mitchell South, Ste. 110
Irvine, CA 92614
www.lcapouya.com
PHONE: (949) 756-0150
FAX: (949) 756-1635
LICENSE #2314

REGISTERED LANDSCAPE ARCHITECT LYNN CAPOUYA NO. 2314
Signature
12/31/2012 Renewal Date
Date
STATE OF CALIFORNIA

MARK	REVISIONS	APPR.	DATE
⚠	AS BUILT		

DESIGNED BY - DRAWN BY - CHECKED BY -

UPRR BRIDGE 55.55 LOS ANGELES SUB

CITY OF RIVERSIDE, CALIFORNIA
PUBLIC WORKS DEPARTMENT

RIVERSIDE AVE UNDERPASS

PLANTING PLAN LP–4

HORIZ. SCALE: AS SHOWN VERT. SCALE: AS SHOWN

ACCT. NO. -
W.O. NO. -

R–4240

SHEET 82 OF 146

FILE NO.

DRAWING NAME: P:\8318 LB13\CADD\Sheet\LANDSCAPE\LP-4.dwg
PLOT DATE: Sep 26, 2016 - 8:06am PLOTTED BY: dhegh

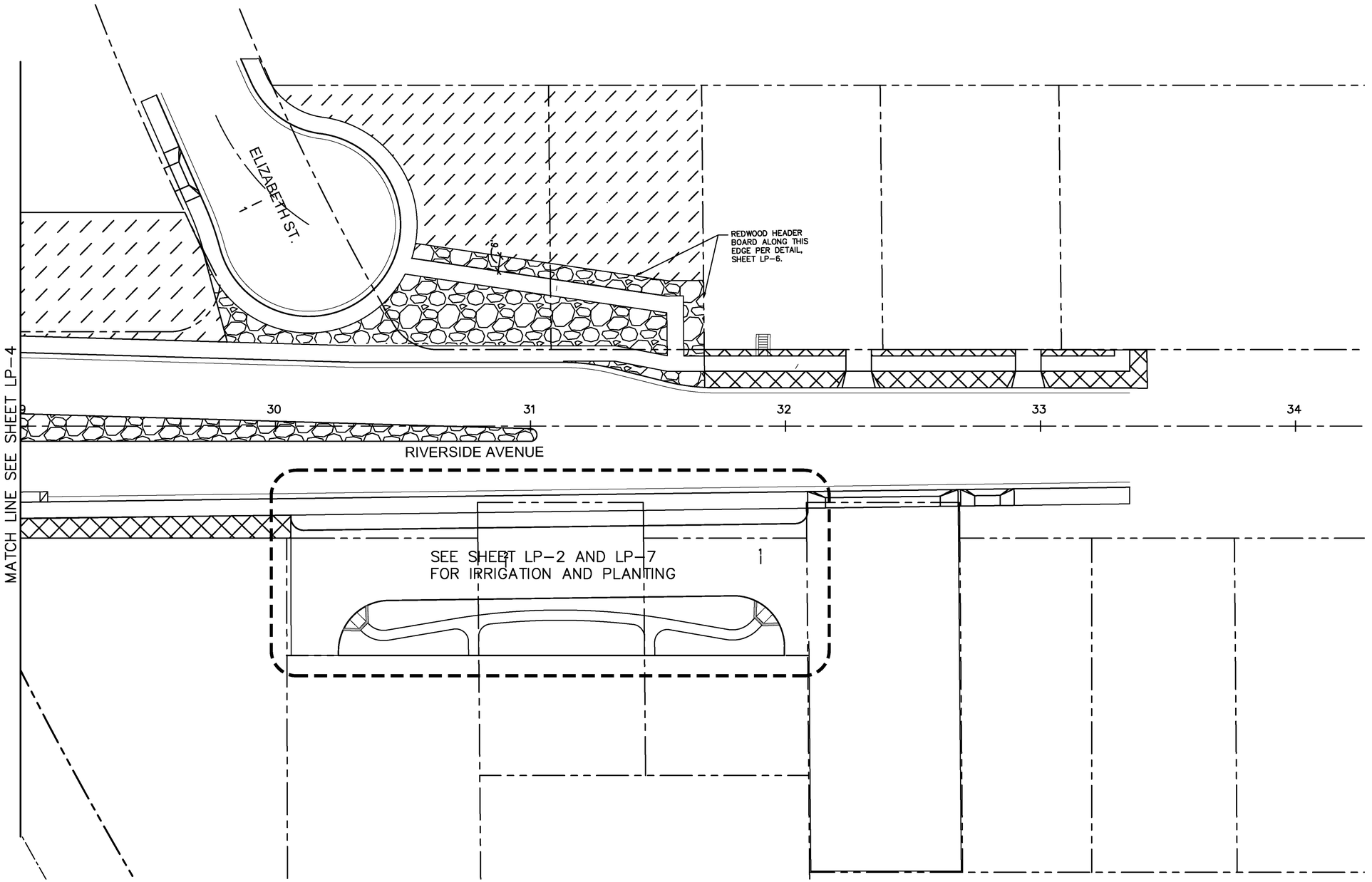

LEGEND:

CONTRACTOR TO RESTORE LANDSCAPE TO ORIGINAL CONDITION.

ROCK COBBLE BLANKET
SEE DETAIL ON SHEET LP-6
SIZE: 4" TO 8"
COLOR: OASIS
AVAILABLE FROM:
DECORATIVE STONE SOLUTIONS
(800) 699-1878
WWW.DECORATIVESTONESOLUTIONS.COM
CONTRACTOR TO SUBMIT SAMPLE OF PROPOSED COBBLE FOR REVIEW AND APPROVAL BY CITY PRIOR TO CONSTRUCTION. FOLLOWING FOR APPROVAL OF COBBLE, CONTRACTOR SHALL PROVIDE 4'X4' DEMONSTRATION PANEL OF COBBLE PAVING FOR REVIEW AND APPROVAL BY CITY PRIOR TO PRODUCTION.

3" LAYER OF MULCH AND STRAW WATTLE

AS BUILT
BID NO. 7185
COMPLETION DATE 03/25/2016
R.E. NAME DAVID HATCH

NORTH

20' 0' 20' 40'
SCALE: 1"=20'

NOTE:
REFER TO CITY OF RIVERSIDE PUBLIC WORKS SPECIFICATIONS AND GUIDELINES TYPICAL DRAWINGS FOR IRRIGATION AND PLANTING DETAILS AND SPECIFICATIONS.

DIGALERT
DIAL TOLL FREE
1-800-422-4133
AT LEAST TWO DAYS BEFORE YOU DIG
UNDERGROUND SERVICE ALERT OF SOUTHERN CALIFORNIA

Lynn Capouya, Inc.
LANDSCAPE ARCHITECTS
17992 Mitchell South, Ste. 110
Irvine, CA 92614
www.lcapouya.com
PHONE: (949) 756-0150
FAX: (949) 756- 1635
LICENSE #2314

REGISTERED LANDSCAPE ARCHITECT LYNN CAPOUYA No. 2314 Signature 12/31/2012 Renewal Date Date STATE OF CALIFORNIA

MARK	REVISIONS	APPR.	DATE
⚠	AS BUILT		

DESIGNED BY - DRAWN BY - CHECKED BY -

UPRR BRIDGE 55.55 LOS ANGELES SUB

CITY OF RIVERSIDE, CALIFORNIA
PUBLIC WORKS DEPARTMENT

RIVERSIDE AVE UNDERPASS

PLANTING PLAN LP-5

HORIZ. SCALE: AS SHOWN VERT. SCALE: AS SHOWN

ACCT. NO. -
W.O. NO. -

R-4240

SHEET 83 OF 146

FILE NO.

DRAWING NAME: P:\1318_LB13\CADD\Sheet\LANDSCAPE\LP-5.dwg
PLOT DATE: Sep 26, 2016 - 5:50pm PLOTTED BY: dleigh

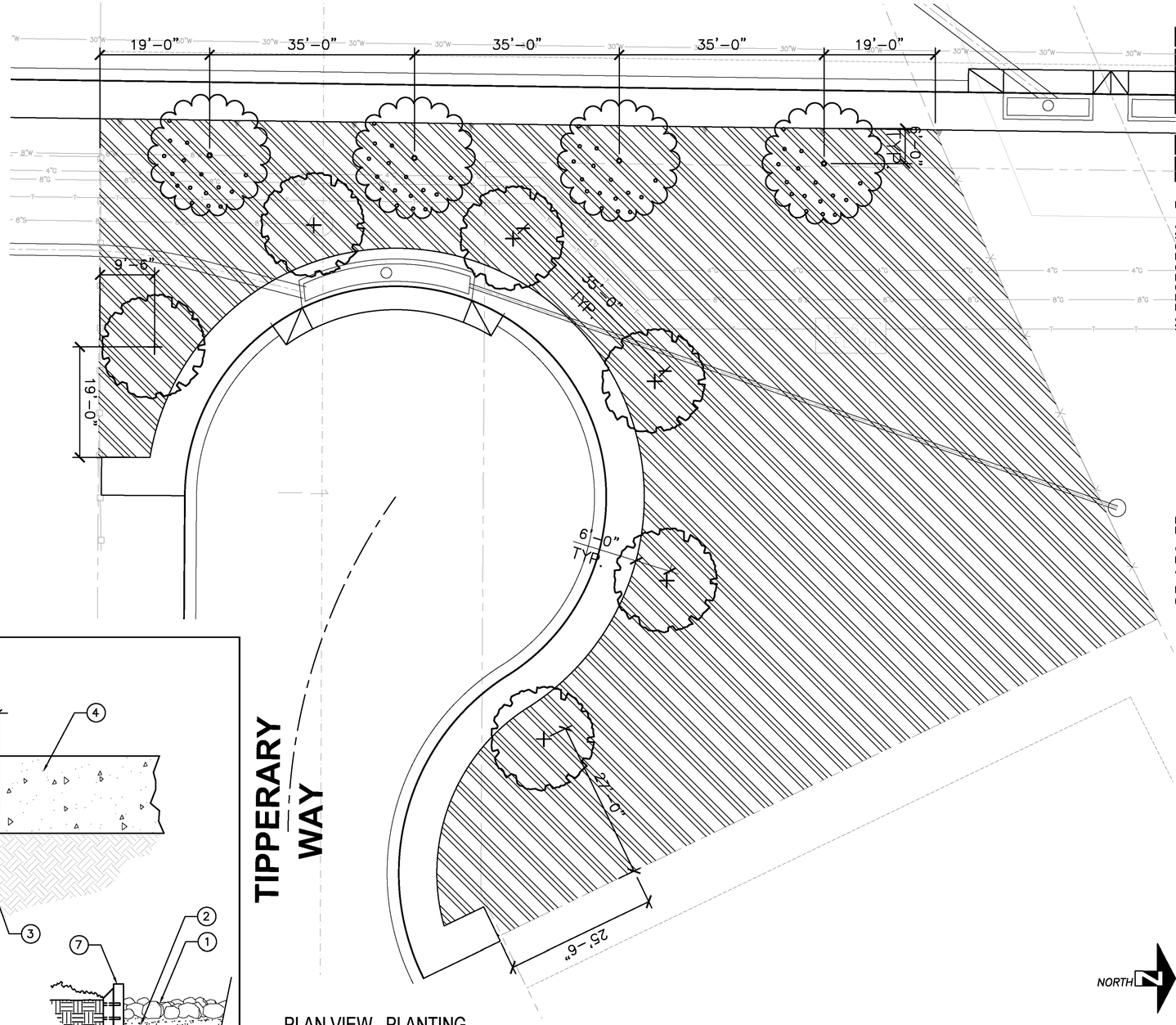

PLAN VIEW - PLANTING
1" = 10'-0"

PLANTING LEGEND

TREES

SYMBOL	PLANT NAME	SIZE	QTY.	REMARK
	MAGNOLIA 'D.D. BLANCHARD' SOUTHERN MAGNOLIA	24" BOX	4	STANDARD TRUNK
	TABEBUIA CHRYSOTRICHA GOLDEN TRUMPET TREE	24" BOX	6	STANDARD TRUNK

GROUND COVERS

SYMBOL	PLANT NAME	SIZE	SQ. FT.	QTY.	REMARK
	ACACIA REDOLENS 'DESERT CARPET' ACACIA	5 GAL.	11,920	383	6'-0" O.C. SPACING

LANDSCAPE GENERAL NOTES

A. ALL RELATED WORK SHALL CONFORM TO THE CITY OF RIVERSIDE PUBLIC WORKS DEPARTMENT STANDARDS AND SPECIFICATIONS FOR PLANTING AND IRRIGATION WORK. (SECTIONS 02441 AND 02483).
B. A 'PUBLIC LANDSCAPE' PERMIT, AS ISSUED BY THE PUBLIC WORKS DEPARTMENT IS REQUIRED. CONTACT THE PUBLIC WORKS LANDSCAPE INSPECTOR AT (951) 351-6313 TO SCHEDULE A PRECONSTRUCTION MEETING AND TO OBTAIN THE PERMIT.
C. WHEN CALLING FOR INSPECTIONS CONTACT THE PUBLIC WORKS LANDSCAPE INSPECTOR A MINIMUM OF 48 HOURS IN ADVANCE TO SCHEDULE AN INSPECTION. A WRITTEN APPROVAL WILL BE PROVIDED ON THE PUBLIC LANDSCAPE PERMIT CARD FOR EACH STAGE OF INSPECTION. A VERBAL APPROVAL WILL NOT BE ACCEPTABLE. INSPECTIONS ARE REQUIRED PER THE STANDARD SPECIFICATIONS, AND INCLUDE BUT ARE NOT NECESSARILY LIMITED TO THE FOLLOWING:
- AFTER COMPLETION OF FINAL GRADING AND WHEN ALL UTILITY SERVICES HAVE BEEN MARKED, BUT PRIOR TO INITIATING ANY LANDSCAPE WORK WITHIN THE PUBLIC RIGHT OF WAY;
- AT TIME OF INSTALLATION OF IRRIGATION SLEEVES AND CONSTANT PRESSURE MAINLINES, BUT PRIOR TO BACKFILL OF TRENCHES FOR SAME (NOTE: MAINLINES MUST BE PRESSURE TESTED IN THE PRESENCE OF THE PUBLIC WORKS LANDSCAPE INSPECTOR);
- AT TIME OF INSTALLATION OF IRRIGATION VALVES, LATERALS AND HEADS;
- FOR SPOTTING OF ALL TREES PRIOR TO DIGGING PLANTING PITS;
- WHILE DIGGING PLANT PITS AND PLANTING/RELOCATING TREES;
- AFTER PLANTING AND ALL OTHER INDICATED OR SPECIFIED WORK HAS BEEN COMPLETED, FOR START OF MAINTENANCE;
- AT SUBSTANTIAL COMPLETION OF THE PROJECT FOR CITY'S ACCEPTANCE TO START THE REQUIRED MAINTENANCE PERIOD;
- AT THE END OF THE MAINTENANCE PERIOD, THE CONTRACTOR/DEVELOPER SHALL CALL THE PUBLIC WORKS LANDSCAPE INSPECTOR AT THE NUMBER LISTED ABOVE FOR A FINAL ACCEPTANCE INSPECTION IN ORDER TO BE RELEASED FROM MAINTENANCE. CONTRACTOR'S BOND WILL NOT BE RELEASED UNTIL AFTER CITY'S ISSUANCE OF WRITTEN NOTIFICATION THAT THE PROJECT HAS PASSED FINAL INSPECTION AND THE PUBLIC WORKS DEPARTMENT IS ASSUMING MAINTENANCE RESPONSIBILITIES.

D. THE DEVELOPER SHALL BE RESPONSIBLE TO ACCEPTABLY MAINTAIN ALL PLANTINGS FOR A MINIMUM PERIOD AS SPECIFIED IN THE BID DOCUMENTS.

*NOTE: IN THE INTEREST OF PUBLIC SAFETY AND MAINTENANCE THE PUBLIC WORKS LANDSCAPE INSPECTOR SHALL HAVE THE AUTHORITY TO REVISE THE TREE QUANTITIES AND LOCATIONS SHOWN ON APPROVED PLANS BASED UPON FIELD CONDITIONS FOUND AT THE TIME OF INSTALLATION OF THE TREES.

REV.
(07/30/2009)

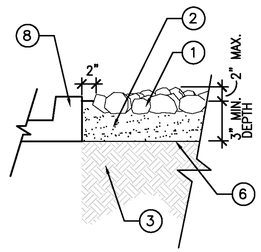

ROCK BLANKET AT MEDIAN
SCALE
N.T.S.

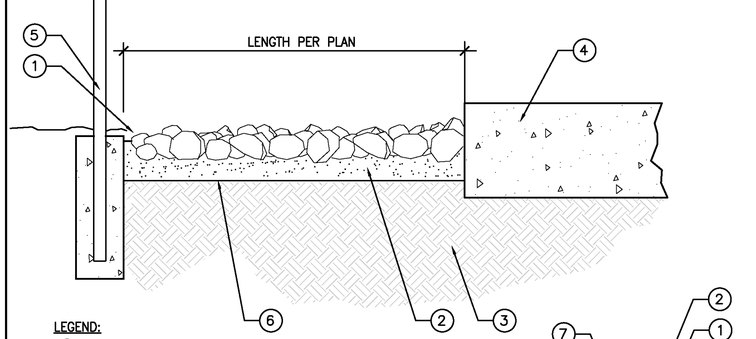

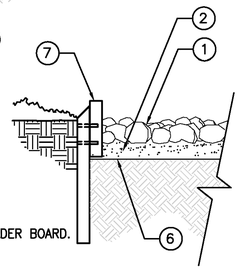

LEGEND:
1. ROCK COBBLE BLANKET. SEE LP-4 FOR SPECIFICATIONS.
2. 3" GROUT. SCREED GROUT 3/4" LESS THAN FINISH GRADE.
3. 90% COMPACTED SUBGRADE, PRE-SATURATED.
4. SIDEWALK WHERE OCCURS.
5. ADJACENT FENCE/BUILDING.
6. GEOTEXTILE/LINER FABRIC WEED BARRIER
7. REDWOOD HEADER BOARD. SEE LP-4 AND LP-5 FOR LOCATION OF HEADER BOARD.
8. CONCRETE CURB AT MEDIAN.

NOTE:
1. WASH ALL EXPOSED PORTIONS OF COBBLE OR BALLAST SO THAT FINISH APPEARS CLEAN.

SCALE
N.T.S.

ROCK COBBLE BLANKET

NOTE:
REFER TO CITY OF RIVERSIDE PUBLIC WORKS SPECIFICATIONS AND GUIDELINES TYPICAL DRAWINGS FOR IRRIGATION AND PLANTING DETAILS AND SPECIFICATIONS.

NORTH

10' 0' 10' 20'
SCALE: 1"=10'

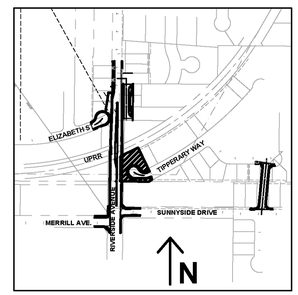

KEY MAP
N.T.S.

AS BUILT
BID NO. 7185
COMPLETION DATE 03/25/2016
R.E. NAME DAVID HATCH

DIGALERT
DIAL TOLL FREE
1-800-422-4133
AT LEAST TWO DAYS BEFORE YOU DIG
UNDERGROUND SERVICE ALERT OF SOUTHERN CALIFORNIA

Lynn Capouya, Inc.
LANDSCAPE ARCHITECTS
17992 Mitchell South, Ste. 110
Irvine, CA 92614
www.lcapouya.com
PHONE: (949) 756-0150
FAX: (949) 756-1635
LICENSE #2314

REGISTERED LANDSCAPE ARCHITECT LYNN CAPOUYA No. 2314 Signature 12/31/2012 Renewal Date STATE OF CALIFORNIA

MARK	REVISIONS	APPR.	DATE
⚠	AS BUILT		

DESIGNED BY - DRAWN BY - CHECKED BY -

UPRR BRIDGE 55.55 LOS ANGELES SUB
CITY OF RIVERSIDE, CALIFORNIA
PUBLIC WORKS DEPARTMENT
RIVERSIDE AVE UNDERPASS
PLANTING PLAN LP-6
HORIZ. SCALE: AS SHOWN VERT. SCALE: AS SHOWN

ACCT. NO. -
W.O. NO. -
R-4240
SHEET 84 OF 146
FILE NO.

DRAWING NAME: P:\B318_LB13\CADD\Sheet\LANDSCAPE\LP-6.dwg
PLOT DATE: Sep 26, 2016 - 3:05pm PLOTTED BY: dhsph

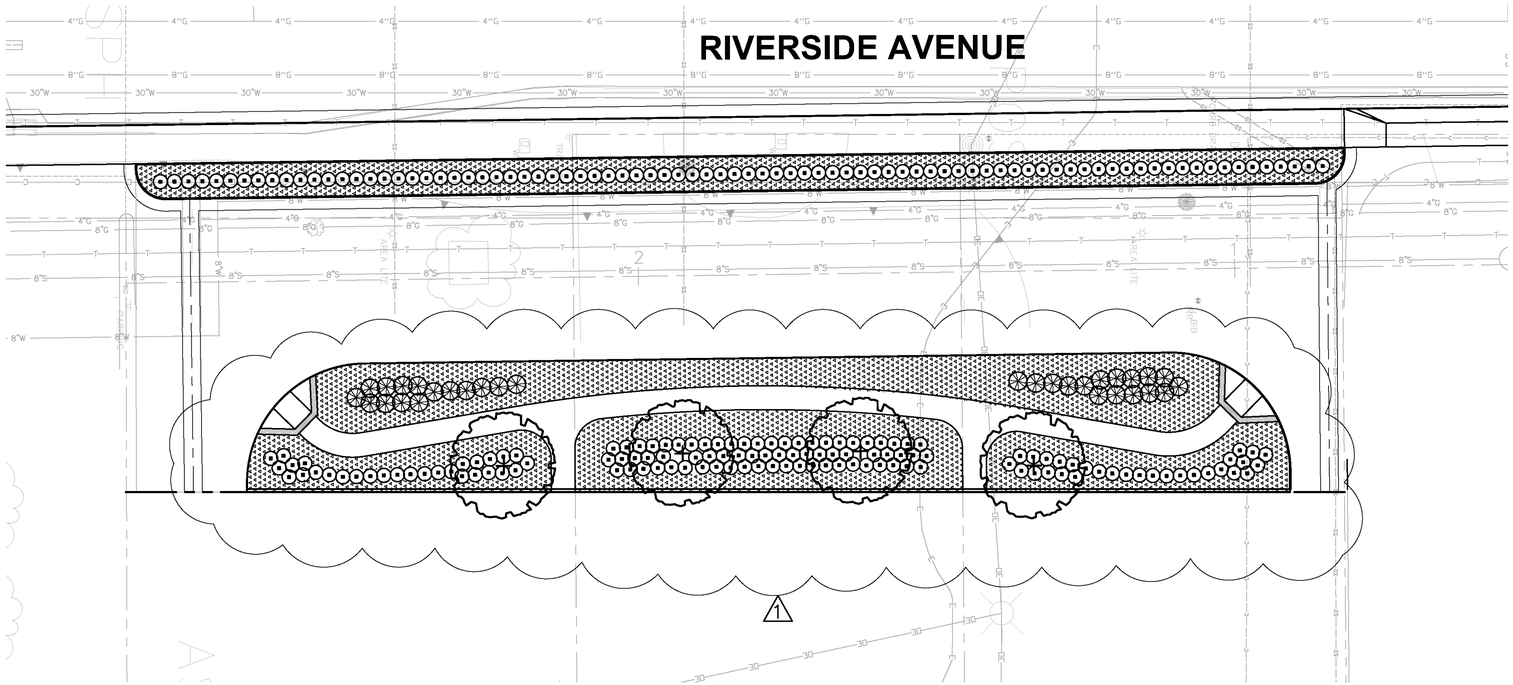

PLAN VIEW - PLANTING
1" = 10'-0"

PLANTING LEGEND

TREES

SYMBOL	PLANT NAME	SIZE	QTY.	REMARK
	TABEBUIA CHRYSOTRICHA GOLDEN TRUMPET TREE	24" BOX	4	STANDARD TRUNK

SHRUBS

SYMBOL	PLANT NAME	SIZE	QTY.	REMARK
	BACCHARIS 'PIGEON POINT' STARN THOMPSON COYOTE BUSH	5 GAL.	31	3'-0" O.C. SPACING
	RHAPHIOLEPIS INDICA 'PINK DANCER' INDIAN HAWTHORN	5 GAL.	212	2'-6" O.C. SPACING

GROUND COVERS

SYMBOL	PLANT NAME	SIZE	QUANT.	SQ.FT.	REMARK
	LANTANA 'NEW GOLD' NEW GOLD LANTANA	1 GAL	381	2,750	3'-0" O.C. SPACING

LANDSCAPE GENERAL NOTES

A. ALL RELATED WORK SHALL CONFORM TO THE CITY OF RIVERSIDE PUBLIC WORKS DEPARTMENT STANDARDS AND SPECIFICATIONS FOR PLANTING AND IRRIGATION WORK. (SECTIONS 02441 AND 02483).
B. A 'PUBLIC LANDSCAPE' PERMIT, AS ISSUED BY THE PUBLIC WORKS DEPARTMENT IS REQUIRED. CONTACT THE PUBLIC WORKS LANDSCAPE INSPECTOR AT (951) 351-6313 TO SCHEDULE A PRECONSTRUCTION MEETING AND TO OBTAIN THE PERMIT.
C. WHEN CALLING FOR INSPECTIONS CONTACT THE PUBLIC WORKS LANDSCAPE INSPECTOR A MINIMUM OF 48 HOURS IN ADVANCE TO SCHEDULE AN INSPECTION. A WRITTEN APPROVAL WILL BE PROVIDED ON THE PUBLIC LANDSCAPE PERMIT CARD FOR EACH STAGE OF INSPECTION. A VERBAL APPROVAL WILL NOT BE ACCEPTABLE. INSPECTIONS ARE REQUIRED PER THE STANDARD SPECIFICATIONS, AND INCLUDE BUT ARE NOT NECESSARILY LIMITED TO THE FOLLOWING:
- AFTER COMPLETION OF FINAL GRADING AND WHEN ALL UTILITY SERVICES HAVE BEEN MARKED, BUT PRIOR TO INITIATING ANY LANDSCAPE WORK WITHIN THE PUBLIC RIGHT OF WAY;
- AT TIME OF INSTALLATION OF IRRIGATION SLEEVES AND CONSTANT PRESSURE MAINLINES, BUT PRIOR TO BACKFILL OF TRENCHES FOR SAME (NOTE: MAINLINES MUST BE PRESSURE TESTED IN THE PRESENCE OF THE PUBLIC WORKS LANDSCAPE INSPECTOR);
- AT TIME OF INSTALLATION OF IRRIGATION VALVES, LATERALS AND HEADS;
- FOR SPOTTING OF ALL TREES PRIOR TO DIGGING PLANTING PITS;
- WHILE DIGGING PLANT PITS AND PLANTING/RELOCATING TREES;
- AFTER PLANTING AND ALL OTHER INDICATED OR SPECIFIED WORK HAS BEEN COMPLETED, FOR START OF MAINTENANCE;
- AT SUBSTANTIAL COMPLETION OF THE PROJECT FOR CITY'S ACCEPTANCE TO START THE REQUIRED MAINTENANCE PERIOD;
- AT THE END OF THE MAINTENANCE PERIOD, THE CONTRACTOR/DEVELOPER SHALL CALL THE PUBLIC WORKS LANDSCAPE INSPECTOR AT THE NUMBER LISTED ABOVE FOR A FINAL ACCEPTANCE INSPECTION IN ORDER TO BE RELEASED FROM MAINTENANCE. CONTRACTOR'S BOND WILL NOT BE RELEASED UNTIL AFTER CITY'S ISSUANCE OF WRITTEN NOTIFICATION THAT THE PROJECT HAS PASSED FINAL INSPECTION AND THE PUBLIC WORKS DEPARTMENT IS ASSUMING MAINTENANCE RESPONSIBILITIES.

D. THE DEVELOPER SHALL BE RESPONSIBLE TO ACCEPTABLY MAINTAIN ALL PLANTINGS FOR A MINIMUM PERIOD AS SPECIFIED IN THE BID DOCUMENTS.

*NOTE: IN THE INTEREST OF PUBLIC SAFETY AND MAINTENANCE THE PUBLIC WORKS LANDSCAPE INSPECTOR SHALL HAVE THE AUTHORITY TO REVISE THE TREE QUANTITIES AND LOCATIONS SHOWN ON APPROVED PLANS BASED UPON FIELD CONDITIONS FOUND AT THE TIME OF INSTALLATION OF THE TREES.

REV.
(07/30/2009)

NORTH

10' 0' 10' 20'
SCALE: 1"=10'

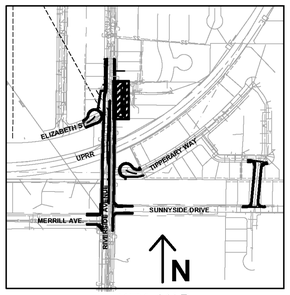

KEY MAP
N.T.S.

AS BUILT
BID NO. 7185
COMPLETION DATE 03/25/2016
R.E. NAME DAVID HATCH

NOTE:
REFER TO CITY OF RIVERSIDE PUBLIC WORKS SPECIFICATIONS AND GUIDELINES TYPICAL DRAWINGS FOR IRRIGATION AND PLANTING DETAILS AND SPECIFICATIONS.

DIGALERT
DIAL TOLL FREE
1-800-422-4133
AT LEAST TWO DAYS BEFORE YOU DIG
UNDERGROUND SERVICE ALERT OF SOUTHERN CALIFORNIA

Lynn Capouya, Inc.
LANDSCAPE ARCHITECTS
17992 Mitchell South, Ste. 110
Irvine, CA 92614
www.lcapouya.com
PHONE: (949) 756-0150
FAX: (949) 756- 1635
LICENSE #2314

REGISTERED LANDSCAPE ARCHITECT
LYNN CAPOUYA
2314
Signature
12/31/2012
Renewal Date
Date
STATE OF CALIFORNIA

MARK	REVISIONS	APPR.	DATE
⚠	AS BUILT		

DESIGNED BY - DRAWN BY - CHECKED BY -

UPRR BRIDGE 55.55 LOS ANGELES SUB
CITY OF RIVERSIDE, CALIFORNIA
PUBLIC WORKS DEPARTMENT
RIVERSIDE AVE UNDERPASS
PLANTING PLAN LP-7
HORIZ. SCALE: AS SHOWN VERT. SCALE: AS SHOWN

ACCT. NO. -
W.O. NO. -
R-4240
SHEET 85 OF 146
FILE NO.

DRAWING NAME: P:\8318 LB13\CADD\Sheet\LANDSCAPE\LP-7.dwg
PLOT DATE: Sep 26, 2016 - 3:05pm PLOTTED BY: dleigh

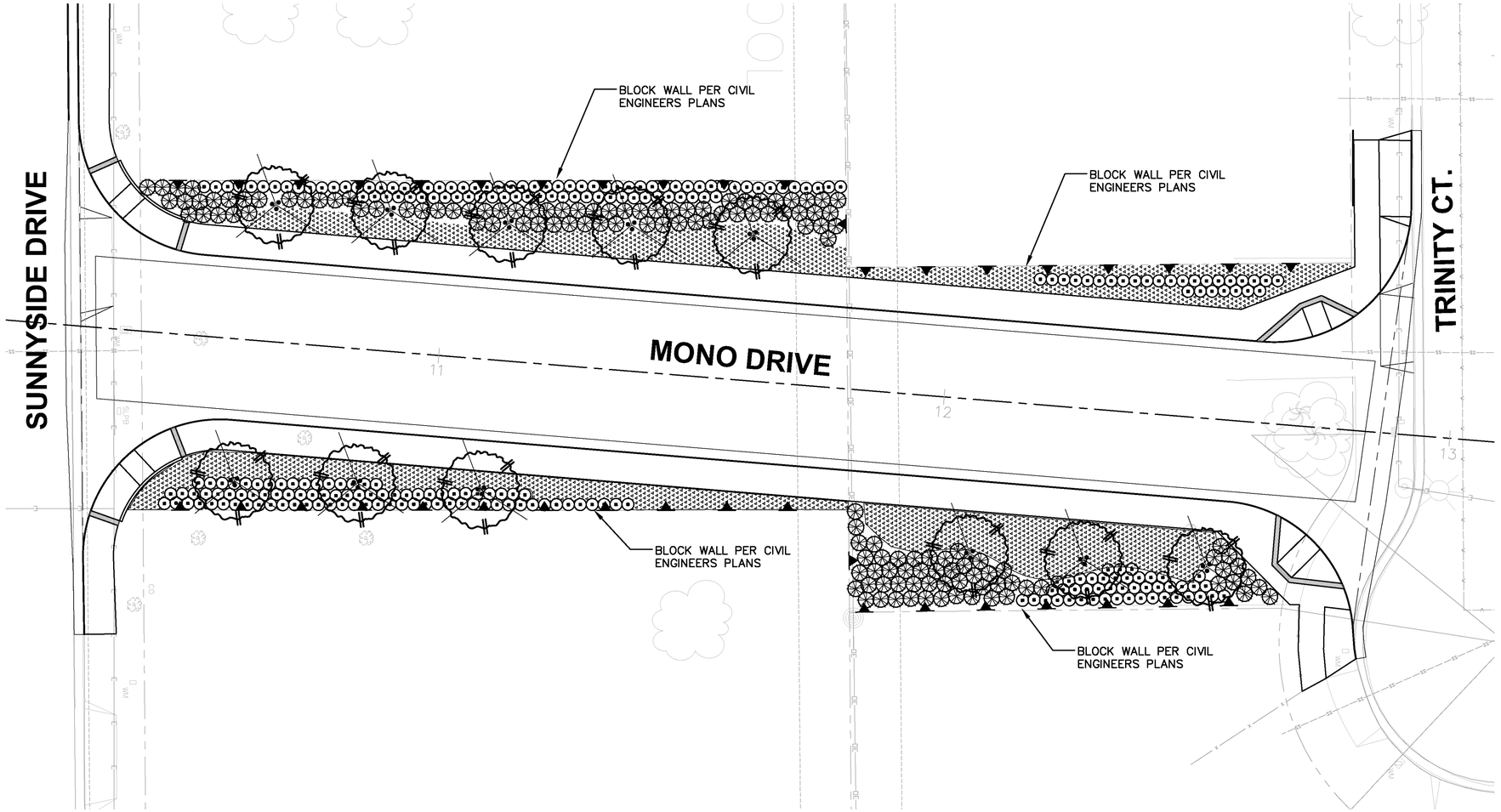

PLAN VIEW - PLANTING
1" = 10'-0"

PLANTING LEGEND

TREES

SYMBOL	PLANT NAME	SIZE	QTY.	REMARK
	LAGERSTROEMIA INDICA 'TUSCARORA' CRAPE MYRTLE	24" BOX	11	MULTI-TRUNK

SHRUBS

SYMBOL	PLANT NAME	SIZE	QTY.	REMARK
⊗	BACCHARIS 'PIGEON POINT' DWARF COYOTE BUSH	5 GAL.	134	3'-0" O.C. SPACING
⊙	RHAPHIOLEPIS INDICA 'PINK DANCER' INDIAN HAWTHORN	5 GAL.	247	3'-0" O.C. SPACING

GROUND COVERS

SYMBOL	PLANT NAME	SIZE	QTY.	SQ.FT.	REMARK
	LANTANA 'NEW GOLD' NEW GOLD LANTANA	1 GAL	308	2,400	3'-0" O.C. SPACING

VINE

▲	FICUS PUMILA REPENS FICUS REPENS	5 GAL.	39	12'-0" O.C. SPACING

LANDSCAPE GENERAL NOTES

A. ALL RELATED WORK SHALL CONFORM TO THE CITY OF RIVERSIDE PUBLIC WORKS DEPARTMENT STANDARDS AND SPECIFICATIONS FOR PLANTING AND IRRIGATION WORK. (SECTIONS 02441 AND 02483).
B. A 'PUBLIC LANDSCAPE' PERMIT, AS ISSUED BY THE PUBLIC WORKS DEPARTMENT IS REQUIRED. CONTACT THE PUBLIC WORKS LANDSCAPE INSPECTOR AT (951) 351-6313 TO SCHEDULE A PRECONSTRUCTION MEETING AND TO OBTAIN THE PERMIT.
C. WHEN CALLING FOR INSPECTIONS CONTACT THE PUBLIC WORKS LANDSCAPE INSPECTOR A MINIMUM OF 48 HOURS IN ADVANCE TO SCHEDULE AN INSPECTION. A WRITTEN APPROVAL WILL BE PROVIDED ON THE PUBLIC LANDSCAPE PERMIT CARD FOR EACH STAGE OF INSPECTION. A VERBAL APPROVAL WILL NOT BE ACCEPTABLE. INSPECTIONS ARE REQUIRED PER THE STANDARD SPECIFICATIONS, AND INCLUDE BUT ARE NOT NECESSARILY LIMITED TO THE FOLLOWING:
- AFTER COMPLETION OF FINAL GRADING AND WHEN ALL UTILITY SERVICES HAVE BEEN MARKED, BUT PRIOR TO INITIATING ANY LANDSCAPE WORK WITHIN THE PUBLIC RIGHT OF WAY;
- AT TIME OF INSTALLATION OF IRRIGATION SLEEVES AND CONSTANT PRESSURE MAINLINES, BUT PRIOR TO BACKFILL OF TRENCHES FOR SAME (NOTE: MAINLINES MUST BE PRESSURE TESTED IN THE PRESENCE OF THE PUBLIC WORKS LANDSCAPE INSPECTOR);
- AT TIME OF INSTALLATION OF IRRIGATION VALVES, LATERALS AND HEADS;
- FOR SPOTTING OF ALL TREES PRIOR TO DIGGING PLANTING PITS;
- WHILE DIGGING PLANT PITS AND PLANTING/RELOCATING TREES;
- AFTER PLANTING AND ALL OTHER INDICATED OR SPECIFIED WORK HAS BEEN COMPLETED, FOR START OF MAINTENANCE;
- AT SUBSTANTIAL COMPLETION OF THE PROJECT FOR CITY'S ACCEPTANCE TO START THE REQUIRED MAINTENANCE PERIOD;
- AT THE END OF THE MAINTENANCE PERIOD, THE CONTRACTOR/DEVELOPER SHALL CALL THE PUBLIC WORKS LANDSCAPE INSPECTOR AT THE NUMBER LISTED ABOVE FOR A FINAL ACCEPTANCE INSPECTION IN ORDER TO BE RELEASED FROM MAINTENANCE. CONTRACTOR'S BOND WILL NOT BE RELEASED UNTIL AFTER CITY'S ISSUANCE OF WRITTEN NOTIFICATION THAT THE PROJECT HAS PASSED FINAL INSPECTION AND THE PUBLIC WORKS DEPARTMENT IS ASSUMING MAINTENANCE RESPONSIBILITIES.

D. THE DEVELOPER SHALL BE RESPONSIBLE TO ACCEPTABLY MAINTAIN ALL PLANTINGS FOR A MINIMUM PERIOD AS SPECIFIED IN THE BID DOCUMENTS.

*NOTE: IN THE INTEREST OF PUBLIC SAFETY AND MAINTENANCE THE PUBLIC WORKS LANDSCAPE INSPECTOR SHALL HAVE THE AUTHORITY TO REVISE THE TREE QUANTITIES AND LOCATIONS SHOWN ON APPROVED PLANS BASED UPON FIELD CONDITIONS FOUND AT THE TIME OF INSTALLATION OF THE TREES.

REV.
(07/30/2009)

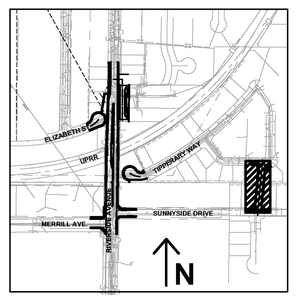

KEY MAP
N.T.S.

NORTH

10' 0' 10' 20'
SCALE: 1"=10'

AS BUILT
BID NO. 7185
COMPLETION DATE 03/25/2016
R.E. NAME DAVID HATCH

NOTE:
REFER TO CITY OF RIVERSIDE PUBLIC WORKS SPECIFICATIONS AND GUIDELINES TYPICAL DRAWINGS FOR IRRIGATION AND PLANTING DETAILS AND SPECIFICATIONS.

DIGALERT
DIAL TOLL FREE
1-800-422-4133
AT LEAST TWO DAYS BEFORE YOU DIG
UNDERGROUND SERVICE ALERT OF SOUTHERN CALIFORNIA

Lynn Capouya, Inc.
LANDSCAPE ARCHITECTS
17992 Mitchell South, Ste. 110
Irvine, CA 92614
www.lcapouya.com
PHONE: (949) 756-0150
FAX: (949) 756-1635
LICENSE #2314

REGISTERED LANDSCAPE ARCHITECT LYNN CAPOUYA No. 2314 Signature 12/31/2012 Renewal Date Date STATE OF CALIFORNIA

MARK	REVISIONS	APPR.	DATE
1	AS BUILT		

DESIGNED BY - DRAWN BY - CHECKED BY -

UPRR BRIDGE 55.55 LOS ANGELES SUB
CITY OF RIVERSIDE, CALIFORNIA
PUBLIC WORKS DEPARTMENT
RIVERSIDE AVE UNDERPASS
PLANTING PLAN LP-8
HORIZ. SCALE: AS SHOWN VERT. SCALE: AS SHOWN

ACCT. NO. -
W.O. NO. -
R-4240
SHEET 86 OF 146
FILE NO.

DRAWING NAME: P:\8318 LB13\CADD\Sheet\LANDSCAPE\LP-8.dwg
PLOT DATE: Sep 26, 2016 - 3:05pm PLOTTED BY: dleigh

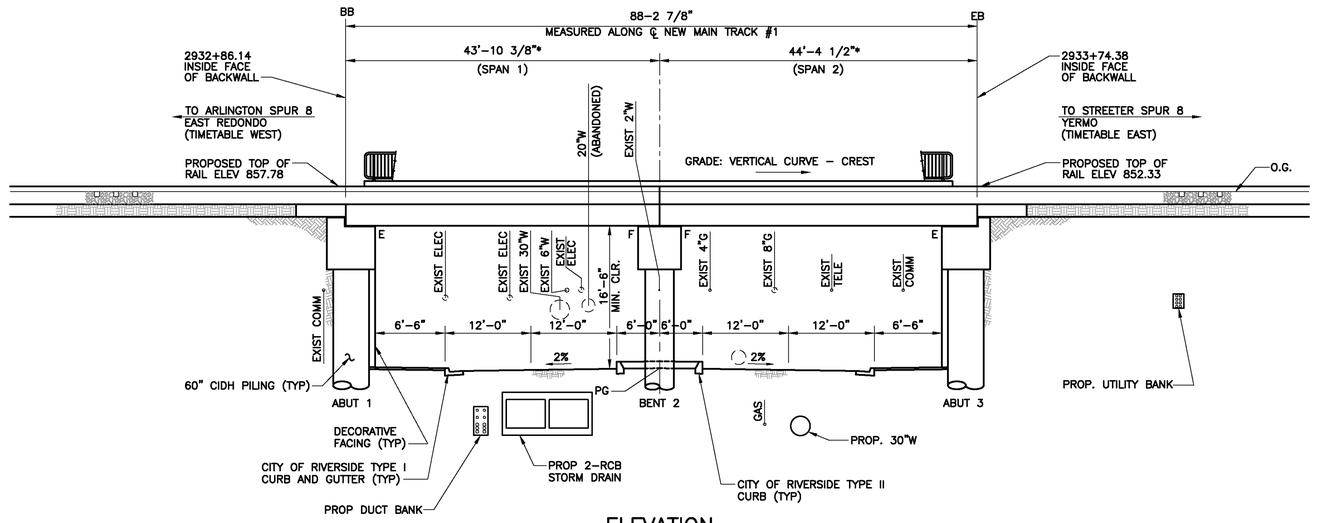

ELEVATION
SCALE: 1"= 10'

* MEASURED ALONG ℄ NEW MAIN TRACK NO. 1.

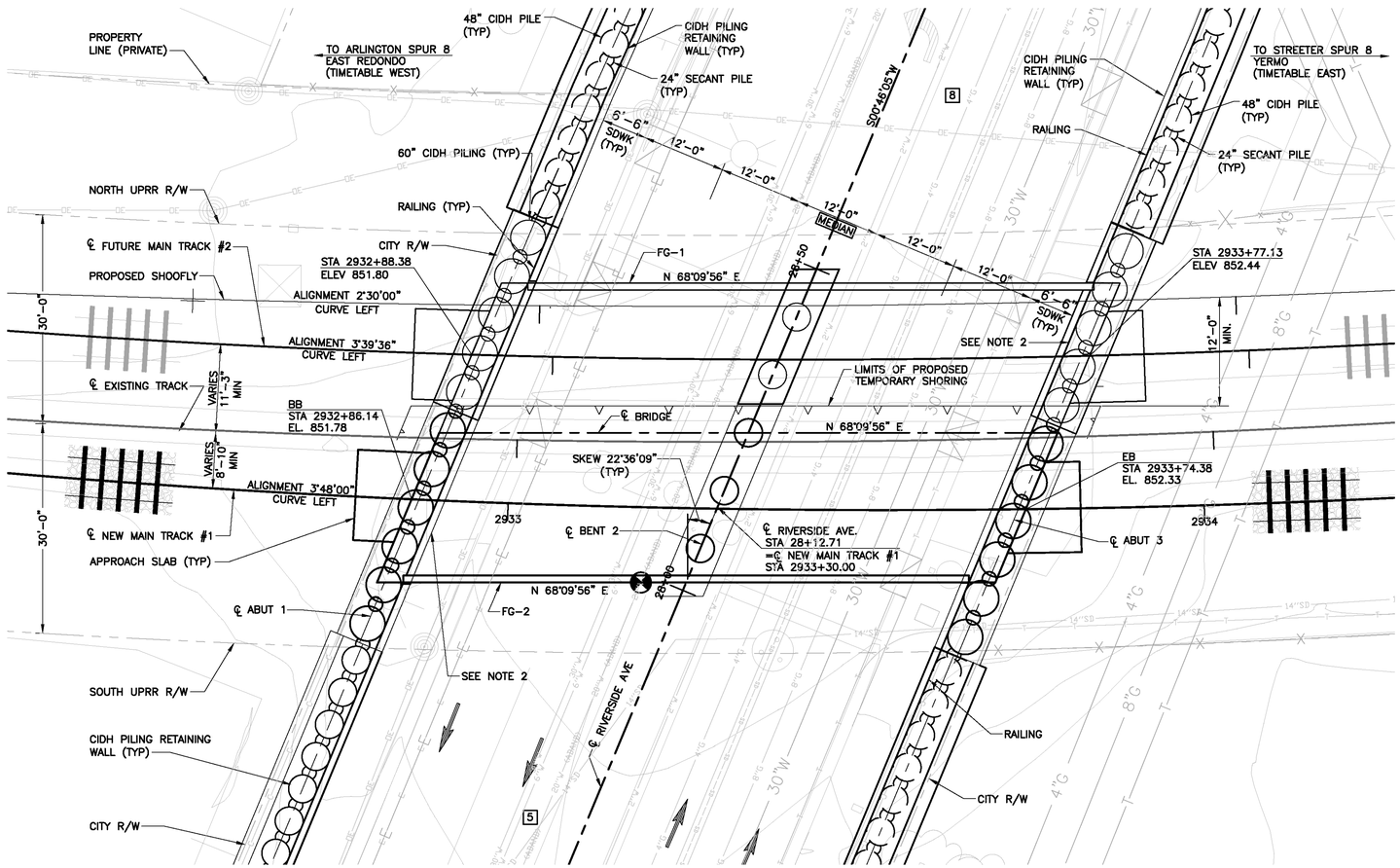

PLAN
SCALE: 1"= 10'

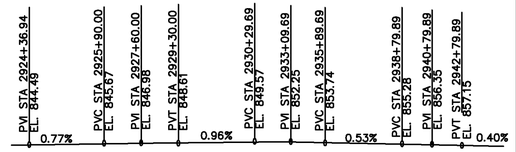

PROPOSED TOP OF RAIL
(MAIN TRACK #1)
(NTS)

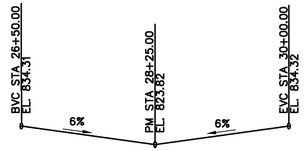

RIVERSIDE AVE. PROFILE
(NTS)

ASBUILT

BID NO. 7185

COMPLETION DATE 03/25/2016

R.E. NAME BONAVENTURE EZEJI

LEGEND:

- INDICATES POINT OF MINIMUM VERTICAL CLEARANCE.
- E EXPANSION END
- F FIXED END
- FG FASCIA GIRDER MARK NUMBER
- ☐ APPROX LOCATIONS FOR SOIL BORINGS, SEE LOG OF TEST BORINGS SHEETS
- BB BEGIN BRIDGE
- EB END BRIDGE

LETTER SERIES
SHEET NO. CUT ON — SHEET NO. SHOWN ON

SECTION DESIGNATION

NOTES:

1. SEE "FOUNDATION PLANS" SHEET FOR MORE INFORMATION.
2. PAINT "BRIDGE NO. 56C0601" AND YEAR CONSTRUCTED, AND "BRIDGE NAME".

DRAWING SCHEDULE

BRIDGE STRUCTURE SHEETS

SHEET NO.	DESCRIPTION
S1	GENERAL ARRANGEMENT
S2	GENERAL NOTES AND BILL OF MATERIALS
S3	PROPOSED CONSTRUCTION STAGING (1 OF 2)
S4	PROPOSED CONSTRUCTION STAGING (2 OF 2)
S5	TYPICAL SECTION (ABUT #1 AND ABUT #3)
S6	TYPICAL SECTION (AT BENT #2)
S7	ARCHITECTURE TREATMENT
S8	FOUNDATION PLAN
S9	CIDH PILE DETAILS AND REINFORCING SCHEDULES
S10	ABUTMENT NO. 1 FRAMING DETAILS
S11	ABUTMENT NO. 1 REINFORCING DETAILS
S12	ABUTMENT NO. 1 FASCIA WALL FRAMING AND REINFORCING DETAILS
S13	ABUTMENT NO. 3 FRAMING DETAILS
S14	ABUTMENT NO. 3 REINFORCING DETAILS
S15	ABUTMENT NO. 3 FASCIA WALL FRAMING AND REINFORCING DETAILS
S16	APPROACH SLAB FRAMING AND REINFORCING DETAILS
S17	BENT NO. 2 FRAMING DETAILS
S18	BENT NO. 2 REINFORCING DETAILS (1 OF 2)
S19	BENT NO. 2 REINFORCING DETAILS (2 OF 2)
S20	CURB FRAMING AND REINFORCING DETAILS
S21	REINFORCING SCHEDULE (1 OF 2)
S22	REINFORCING SCHEDULE (2 OF 2)
S23	BEAM SPAN FRAMING PLAN
S24	BEAM DETAILS (1 OF 2)
S25	BEAM DETAILS (2 OF 2)
S26	BEAM SPAN ASSEMBLY DETAILS
S27	BEAM SPAN BEARING ASSEMBLY DETAILS (1 OF 2)
S28	BEAM SPAN BEARING ASSEMBLY DETAILS (2 OF 2)
S29	BEAM SPAN PIECE MARK DETAILS
S30	DECK PLATE LAYOUT
S31	DECK PLATE DETAILS
S32	WATERPROOFING AND DRAINAGE DETAILS (1 OF 2)
S33	WATERPROOFING AND DRAINAGE DETAILS (2 OF 2)
S34	PRESTRESSED CONCRETE FASCIA GIRDER DETAILS (1 OF 6)
S35	PRESTRESSED CONCRETE FASCIA GIRDER DETAILS (2 OF 6)
S36	PRESTRESSED CONCRETE FASCIA GIRDER DETAILS (3 OF 6)
S37	PRESTRESSED CONCRETE FASCIA GIRDER DETAILS (4 OF 6)
S38	PRESTRESSED CONCRETE FASCIA GIRDER DETAILS (5 OF 6)
S39	PRESTRESSED CONCRETE FASCIA GIRDER DETAILS (6 OF 6)
S40	BRIDGE STEEL HANDRAIL DETAILS
S41	MISCELLANEOUS DETAILS
S42	RETAINING WALL LOCATION GENERAL LAYOUT
S43	RETAINING WALL GENERAL NOTES AND INDEX TO PLANS
S44	RETAINING WALL 1 AND 2 PLAN AND ELEVATION
S45	RETAINING WALL 3 PLAN AND ELEVATION
S46	RETAINING WALL 4 PLAN AND ELEVATION
S47	RETAINING WALL 5 AND 6 PLAN AND ELEVATION
S48	RETAINING WALL 7 PLAN AND ELEVATION
S49	RETAINING WALL 8 PLAN AND ELEVATION
S50	RETAINING WALL 8 DETAILS (1 OF 2)
S51	RETAINING WALL 8 DETAILS (2 OF 2)
S52	24" DIA. CIDH PILE RETAINING WALL DETAILS
S53	48" DIA. CIDH PILE RETAINING WALL DETAILS
S54	RW STEEL HANDRAIL DETAILS
S55	LOG OF TEST BORINGS – 1 OF 6
S56	LOG OF TEST BORINGS – 2 OF 6
S57	LOG OF TEST BORINGS – 3 OF 6
S58	LOG OF TEST BORINGS – 4 OF 6
S59	LOG OF TEST BORINGS – 5 OF 6
S60	LOG OF TEST BORINGS – 6 OF 6

10' 0' 10' 20'
SCALE: 1"=10'

BRIDGE #: 56C0601

UPRR BRIDGE 55.54 LOS ANGELES SUB

CITY OF RIVERSIDE, CALIFORNIA
PUBLIC WORKS DEPARTMENT

RIVERSIDE AVE UNDERPASS

R–4240

GENERAL ARRANGEMENT

STRUCTURE SHEET NO. S1
ACCT. NO. –
W.O. NO. –
SHEET 87 OF 146
FILE NO.

HORIZ. SCALE: AS SHOWN VERT. SCALE: AS SHOWN

DESIGNED BY RW DRAWN BY TP CHECKED BY MSN

MARK	REVISIONS	APPR.	DATE
⚠	REVISED DRAWING SCHEDULE	YD	08/28/14

DIGALERT
DIAL TOLL FREE
1-800-422-4133
AT LEAST TWO DAYS BEFORE YOU DIG
UNDERGROUND SERVICE ALERT OF SOUTHERN CALIFORNIA

MOFFATT & NICHOL
3780 KILROY AIRPORT WAY, SUITE 600
LONG BEACH, CALIFORNIA, 90806
562–426–9551

DATE

REGISTERED PROFESSIONAL ENGINEER
YONG DENG
NO. C65629
EXP. 09/30/13
CIVIL
STATE OF CALIFORNIA

DRAWING NAME: \\metroplab02\lb_projects\8318 lb13\CADD\Sheet\STRUCTURE\635501S001.dwg
PLOT DATE: Sep 27, 2016 – 9:28am PLOTTED BY: dleigh

GENERAL NOTES:

1. ALL WORK REQUIREMENTS SHOWN ON THE TRACK DRAWINGS AND NOT OTHERWISE DETAILED SHALL BE ACCOMPLISHED AS SPECIFIED IN UNION PACIFIC RAILROAD SPECIFICATIONS AND THE MOST CURRENT EDITION OF THE AMERICAN RAILWAY ENGINEERING AND MAINTENANCE-OF-WAY ASSOCIATION (AREMA) MANUAL FOR RAILWAY ENGINEERING. IN THE EVENT OF CONFLICTS BETWEEN SPECIFICATIONS, THE MORE RESTRICTIVE SHALL APPLY.

DESIGN DATA

1. THE PROPOSED SUBSTRUCTURES HAVE BEEN DESIGNED IN ACCORDANCE WITH 2010 AREMA MANUAL FOR RAILWAY ENGINEERING CHAPTER 8 – CONCRETE STRUCTURES AND FOUNDATIONS.
2. THE PROPOSED SUPERSTRUCTURE HAS BEEN DESIGNED IN ACCORDANCE WITH 2010 AREMA MANUAL FOR RAILWAY ENGINEERING CHAPTER 15 – STEEL STRUCTURES AND CHAPTER 29 – WATERPROOFING.
3. THE PROPOSED SUBSTRUCTURE AND SUPERSTRUCTURE HAVE BEEN DESIGNED FOR COOPER E80 LIVE LOAD OR ALTERNATE LIVE LOAD WHERE APPLICABLE, PLUS IMPACT, AND 30" TOTAL DEPTH OF BALLAST.
4. SUBSURFACE EXPLORATION WAS PERFORMED BY EARTH MECHANICS. "FOUNDATION REPORT, RIVERSIDE AVENUE UNDERPASS/RIVERSIDE AVENUE GRADE SEPARATION PROJECT" (DATED JANUARY 27, 2012).
5. SEISMIC DESIGN PERFORMED IN ACCORDANCE WITH 2010 AREMA MANUAL FOR RAILWAY ENGINEERING CHAPTER 9 – SEISMIC DESIGN FOR RAILWAY STRUCTURES AND USING CALTRANS SDC 1.6 (2010).

SEISMIC DESIGN LOADING

THREE LEVEL GROUND MOTION AND PERFORMANCE CRITERIA:

1. SERVICEABILITY LIMIT STATE
2. ULTIMATE LIMIT STATE
3. SURVIVABILITY LIMIT STATE

SEISMIC DESIGN LOADING

PERIOD (SECONDS)	HORIZONTAL SPECTRAL RESPONSE (G)		
	SERVICEABILITY	ULTIMATE	SURVIVABILITY
0.0	0.820	1.223	1.645
0.1	0.820	1.223	1.645
0.2	0.820	1.223	1.645
0.3	0.820	1.223	1.645
0.4	0.725	1.081	1.454
0.5	0.625	0.931	1.253
0.6	0.553	0.825	1.110
0.7	0.499	0.744	1.002
0.8	0.457	0.681	0.916
0.9	0.422	0.629	0.847
1.0	0.394	0.587	0.790
1.1	0.369	0.551	0.741
1.2	0.349	0.520	0.699
1.3	0.330	0.493	0.663
1.4	0.315	0.469	0.631
1.5	0.300	0.448	0.603
2.0	0.248	0.370	0.497
2.5	0.214	0.319	0.429
3.0	0.189	0.282	0.380
3.5	0.171	0.255	0.343
4.0	0.156	0.233	0.313

DIVISION OF RESPONSIBILITY:

A. RAILROAD

1. INSTALL NEW BALLAST, TIES, RAIL AND OTHER TRACK MATERIALS FOR THE PERMANENT MAIN LINE TRACK.
2. PERFORM TRACK SHIFT AND RECONNECTION WITHIN CLEAR ZONES.
3. RESURFACE THE TRACK AS NEEDED
4. PROVIDE AND INSTALL BRIDGE MARKER SIGNS AT EACH END OF BRIDGE
5. PROVIDE SITE OBSERVATION DURING CONSTRUCTION AT SIGNIFICANT CONSTRUCTION MILESTONES OR AS DESIGNATED BY THE RAILROAD FOR COMPONENT INSTALLATIONS.

B. CONTRACTOR

1. COORDINATE ALL CONSTRUCTION ACTIVITIES WITH THE CITY OF RIVERSIDE AND THE RAILROAD.
2. VERIFY THE LOCATION, RELOCATION, ABANDONMENT, AND/OR TEMPORARY SUPPORT OF ALL UTILITIES AFFECTED BY THE CONSTRUCTION OF THE STRUCTURE AND EMBANKMENT AND COORDINATE THESE ACTIVITIES WITH THE ENGINEER, THE APPROPRIATE UTILITY COMPANIES, AGENCIES AND/OR AUTHORITIES. FOR INFORMATION ON, AND RELOCATION OF, FIBER OPTIC CABLE, CALL 1-800-336-9193.
3. APPLY FOR AND OBTAIN ALL CONSTRUCTION PERMITS NECESSARY TO PERFORM THE WORK.
4. PREPARE SUBGRADE AND INSTALL SUBBALLAST ACCORDING TO SPECIFICATIONS FOR THE PERMANENT MAIN LINE TRACK AND THE SHOOFLY. FURNISH AND INSTALL BALLAST, RAIL, TIES AND OTM FOR THE SHOOFLY TRACK.
5. CONSTRUCTION SUBMITTALS TO BE DESIGNED PER UPRR AND AREMA REQUIREMENTS AND REVIEWED AND APPROVED BY THE ENGINEER.
6. PROVIDE DETAILED TEMPORARY SHORING PLANS TO THE ENGINEER AND RAILROAD FOR APPROVAL BEFORE CONSTRUCTION. CONTRACTOR SHALL HAVE FULL RESPONSIBILITY FOR ANY TEMPORARY SHORING.

CAST-IN-PLACE AND PRECAST CONCRETE NOTES:

CONCRETE

1. ALL CONCRETE MATERIALS, PLACEMENT AND WORKMANSHIP SHALL BE IN ACCORDANCE WITH THE CURRENT EDITION OF THE AREMA MANUAL FOR RAILWAY ENGINEERING, CHAPTER 8.
2. ALL CONCRETE SHALL HAVE A COMPRESSIVE STRENGTH OF 4000 LB. PER SQUARE INCH AT 28 DAYS, UNLESS NOTED OTHERWISE.
3. EXPOSED SURFACES SHALL BE FORMED IN A MANNER WHICH WILL PRODUCE A SMOOTH AND UNIFORM APPEARANCE WITHOUT RUBBING OR PLASTERING. EXPOSED EDGES OF 90 DEGREES OR LESS ARE TO BE CHAMFERED 3/4" UNLESS NOTED OTHERWISE. TOP SURFACE TO HAVE A SMOOTH FINISH, FREE OF ALL FLOAT OR TROWEL MARKS.
4. CONCRETE SHALL BE PROPORTIONED SUCH THAT THE WATER-CEMENT RATIO (BY WEIGHT) DOES NOT EXCEED 0.45. CONCRETE MUST CONTAIN A MINIMUM OF SIX AND ONE HALF (6 1/2") SACKS OF CEMENT PER CUBIC YARD OF CONCRETE.
5. CEMENT SHALL BE TYPE I, II OR III PORTLAND CEMENT AS SPECIFIED IN THE CURRENT EDITION OF ASTM C150.
6. COARSE AGGREGATE SHALL BE GRADED IN ACCORDANCE WITH ASTM C33, SIZE NO. 67.
7. FINE AGGREGATE SHALL BE GRADED IN ACCORDANCE WITH ASTM C33, NATURAL SAND.
8. TOTAL ENTRAINED AIR CONTENT SHALL BE BETWEEN 5% AND 7% (BY VOLUME).
9. ADMIXTURES SHALL NOT BE USED WITHOUT APPROVAL BY THE ENGINEER.
10. CURING SHALL BE ACCOMPLISHED BY WET CURING OR MEMBRANE CURING COMPOUND. MEMBRANE CURING COMPOUND SHALL CONFORM TO ASTM C309 TYPE 2.

REINFORCING STEEL

1. REINFORCING STEEL SHALL BE DEFORMED, NEW BILLET BARS PER CURRENT ASTM A706 SPECIFICATIONS AND MEET GRADE 60 REQUIREMENTS, EXCEPT AS OTHERWISE NOTED.
2. FABRICATION OF REINFORCING STEEL SHALL BE PER CHAPTER 7 OF THE CRSI MANUAL OF STANDARD PRACTICE. DIMENSIONS OF BENDING DETAILS ARE OUT TO OUT OF BAR.
3. REINFORCING STEEL IS TO BE BLOCKED TO PROPER LOCATION AND SECURELY WIRED AGAINST DISPLACEMENT. TACK WELDING OF REINFORCING IS PROHIBITED. MINIMUM CONCRETE COVER ON REINFORCEMENT SHALL MEET CURRENT AREMA REQUIREMENTS.

STRUCTURAL STEEL NOTES:

DESIGN STRESSES

DESIGN STRESSES FOR THE FOLLOWING MATERIALS ARE IN ACCORDANCE WITH THE AMERICAN RAILWAY ENGINEERING AND MAINTENANCE-OF-WAY ASSOCIATION (AREMA).

STRUCTURAL STEEL:	ASTM A709, GRADE 50W	Fy = 50,000 psi
STRUCTURAL STEEL:	ASTM A709, GRADE 36	Fy = 36,000 psi
STRUCTURAL STEEL:	ASTM A588	Fy = 50,000 psi

DESIGN LOADING

LIVE LOAD, DECK PLATE	= ALTERNATE LIVE LOAD	CHAPTER 15
LIVE LOAD, LONGITUDINAL BEAMS	= COOPER E80	CHAPTER 15
IMPACT	= 2010 AREMA	CHAPTER 15
OTHER LOADS	= 2010 AREMA	CHAPTER 15
BALLAST	= 30" DEEP NOMINAL (ACCOUNT FOR FUTURE RAISES)	

STRUCTURAL STEEL

1. FABRICATION AND SHOP ASSEMBLY SHALL COMPLY WITH AREMA CHAPTER 15, PART 3: "FABRICATION".
2. FABRICATION OF STRUCTURAL STEEL SHALL BE PERFORMED BY A FABRICATOR CERTIFIED UNDER AISC QUALITY CERTIFICATION PROGRAM FOR MAJOR STEEL BRIDGES (CBR).
3. STRUCTURAL STEEL SHALL CONFORM TO THE FOLLOWING REQUIREMENTS:

LONGITUDINAL BEAMS AND CROSS FRAME/DIAPHRAGM	ASTM A709, GRADE 50W
DECK PLATE	ASTM A709, GRADE 36
ALL OTHER STRUCTURAL STEEL	ASTM A588, EXCEPT AS NOTED
ANCHOR RODS/ANCHOR BOLTS (GALV.) ⚠	ASTM F1554, GRADE 55
UNLESS OTHERWISE NOTED	

4. STRUCTURAL STEEL SHALL BE OF THE TYPE AND QUALITY AS DESIGNATED ON THE PLANS. MATERIAL SUPPLIED SHALL MEET THE LONGITUDINAL CHARPY V-NOTCH REQUIREMENTS FOR ZONE 1 AS SPECIFIED IN THE AREMA PROVISIONS.
5. ALL SHOP AND FIELD BOLTED CONNECTIONS SHALL USE HIGH STRENGTH BOLTS (INCLUDING NUTS AND WASHERS) CONFORMING TO ASTM A325, TYPE 3, EXCEPT AS OTHERWISE NOTED. NUTS SHALL BE PER ASTM A563 SPECIFICATION, UNLESS OTHERWISE NOTED. HOLES FOR BOLTS SHALL BE 1/16 DIAMETER LARGER THAN NOMINAL DIAMETER UNLESS OTHERWISE NOTED. ALL HIGH STRENGTH STEEL BOLTS SHALL HAVE ONE HARDENED STEEL WASHER (PER ASTM F436) PER BOLT UNDER THE ELEMENT TO BE TURNED AND SHALL BE INSTALLED USING THE "TURN OF THE NUT METHOD". ALTERNATIVE BOLT FASTENING METHODS ARE SUBJECT TO APPROVAL OF THE ENGINEER.
6. BOLTS SHALL BE PLACED SO THAT THE BOLT HEADS ARE ON THE OUTSIDE (EXPOSED) SURFACE OF THE MEMBER WHEREVER POSSIBLE UNLESS SHOWN OTHERWISE ON THE PLANS. THREADS SHALL BE EXCLUDED FROM THE SHEAR PLANE IN ALL CONNECTIONS.
7. CENTER TO CENTER DIMENSIONS SHALL BE AS NOTED.
8. ALL MACHINE BOLTS REQUIRED SHALL BE ASTM A307.
9. WELDING: ALL WELDING SHALL BE IN ACCORDANCE WITH THE CURRENT EDITION OF THE BRIDGE WELDING CODE, AWS D1.5. WELDING TO BE ALLOWED ONLY AS SHOWN ON DESIGN DRAWINGS AND APPROVED SHOP DRAWINGS.

STRUCTURAL STEEL (CONT.)

10. WELDED JOINTS SHALL CONFORM TO THE PREQUALIFIED DETAILS OF AWS D1.5, FIGURE 2.4. ALTERNATE JOINT DETAILS MAY BE SUBMITTED FOR APPROVAL. ALL WELDING SHALL BE DONE TO MINIMIZE DISTORTION. THE WELDING SEQUENCE AND PROCEDURES TO BE USED SHALL BE SUBMITTED TO THE ENGINEER FOR APPROVAL.
11. FULLY AUTOMATIC SUBMERGED ARC WELDING SHALL BE REQUIRED FOR THIS PROJECT. MANUAL SHIELDED ARC WELDING OR SEMI-AUTOMATIC SUBMERGED ARC WELDING WILL BE ALLOWED ONLY IF FULLY AUTOMATIC SUBMERGED ARC WELDING IS NOT PRACTICAL. ALTERNATE WELDING METHODS ARE SUBJECT TO THE ENGINEER'S APPROVAL.
12. WHEN WELDING A709, GRADE 50W, OR A588 STEEL, WELD METAL MUST BE COMPATIBLE WITH A709, GRADE 50W, OR A588 STEEL IN STRENGTH, CORROSION RESISTANCE AND WEATHERED APPEARANCE.
13. THE FABRICATOR SHALL SUBMIT COPIES OF WELDERS' CERTIFICATES FOR ALL WELDING PROCESSES.
14. THE FABRICATOR SHALL SUBMIT THREE (3) COPIES OF DETAILED SHOP DRAWINGS PRIOR TO BEGINNING FABRICATION. FABRICATION SHALL NOT BEGIN UNTIL SHOP DRAWINGS ARE APPROVED.
15. THE FABRICATOR SHALL SHOP ASSEMBLE THE SPANS PRIOR TO SHIPPING. DURING ASSEMBLY AND REAMING ALL BOLTS SHALL BE PLACED IN HOLES AS WORK PROGRESSES TO ASSURE PROPER FIT.
16. SHOP ASSEMBLED SPANS SHALL BE INSPECTED BY THE ENGINEER OR HIS/HER REPRESENTATIVE BEFORE THE STEEL IS DISASSEMBLED AND/OR SHIPPED TO THE ERECTION SITE. PIECES SHALL BE MATCH-MARKED AS REQUIRED.
17. REAMING OF HOLES DURING FIELD ERECTION IS NOT ALLOWED, UNLESS APPROVED IN WRITING BY THE ENGINEER.
18. ALL STRUCTURAL STEEL SHALL BE BLAST CLEANED PRIOR TO SHIPMENT AS FOLLOWS, EXCEPT AS NOTED OTHERWISE. ALL ASTM A709 STEEL, OTHER SURFACES VISIBLE FROM SIDES AND ALL FAYING SURFACES REGARDLESS OF LOCATION: MINIMUM SSPC -SP6, COMMERCIAL BLAST CLEANING. ALL REMAINING STEEL SURFACES: SSPC-SP1, SOLVENT CLEANING. ALL STEEL MEMBERS SHALL BE CLEARLY MARKED AFTER BLAST CLEANING HAS BEEN COMPLETED.

ASBUILT

BID NO. 7185

COMPLETION DATE 03/25/2016

R.E. NAME BONAVENTURE EZEJI

DRAWING NAME: \\netapp1b02\b_projects\8318 Ib13\CADD\Sheet\STRUCTURE\635501S002_Addendum1.dwg
PLOT DATE: Sep 27, 2016 - 9:29am PLOTTED BY: dleigh

DIGALERT
DIAL TOLL FREE 1-800-422-4133
AT LEAST TWO DAYS BEFORE YOU DIG
UNDERGROUND SERVICE ALERT OF SOUTHERN CALIFORNIA

MOFFATT & NICHOL
3780 KILROY AIRPORT WAY, SUITE 600
LONG BEACH, CALIFORNIA, 90806
562-426-9551

DATE _____

REGISTERED PROFESSIONAL ENGINEER
YONG DENG
NO. C65629
EXP. 09/30/13
CIVIL
STATE OF CALIFORNIA

MARK	REVISIONS	APPR.	DATE
⚠	ADDED GALV. TO ANCHOR RODS/BOLTS	YD	10/16/13

DESIGNED BY RW DRAWN BY TP CHECKED BY MSN

UPRR BRIDGE 55.54 LOS ANGELES SUB

CITY OF RIVERSIDE, CALIFORNIA
PUBLIC WORKS DEPARTMENT

RIVERSIDE AVE UNDERPASS

GENERAL NOTES AND BILL OF MATERIALS

HORIZ. SCALE: AS SHOWN VERT. SCALE: AS SHOWN

STRUCTURE SHEET NO. S2

ACCT. NO. -
W.O. NO. -

R-4240

SHEET 88 OF 146

FILE NO.

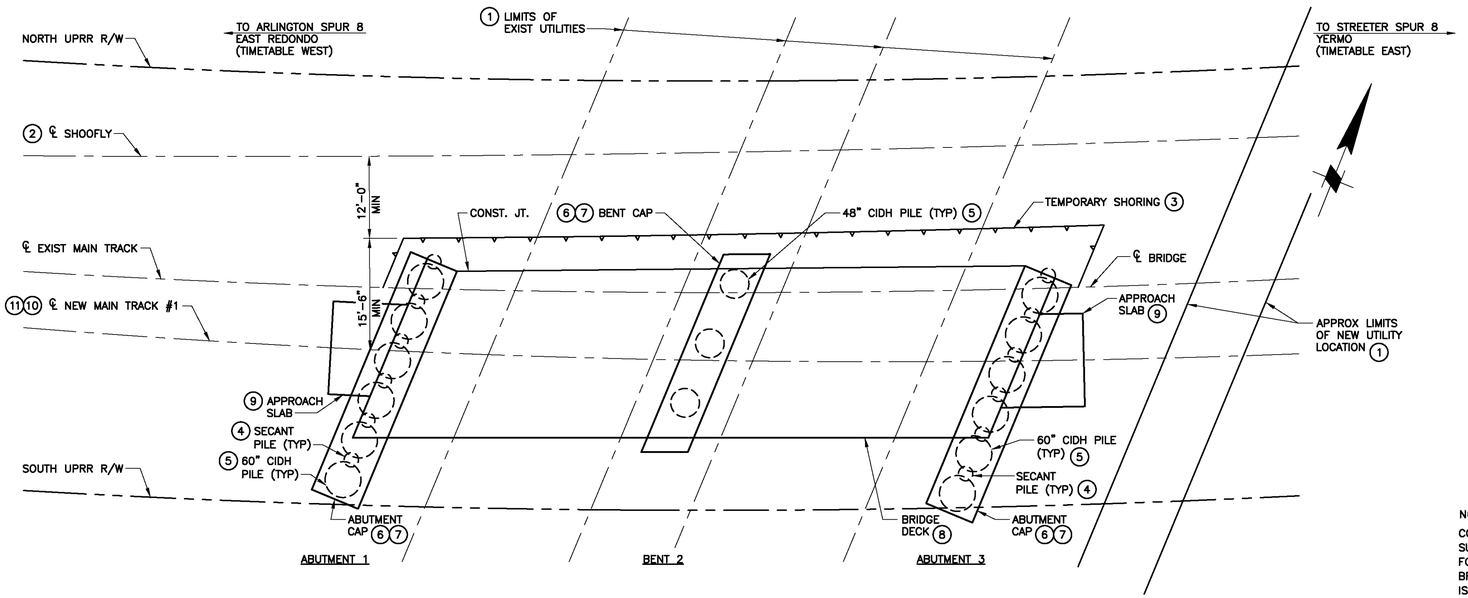

STAGE 1 CONSTRUCTION SEQUENCE
1"=10'

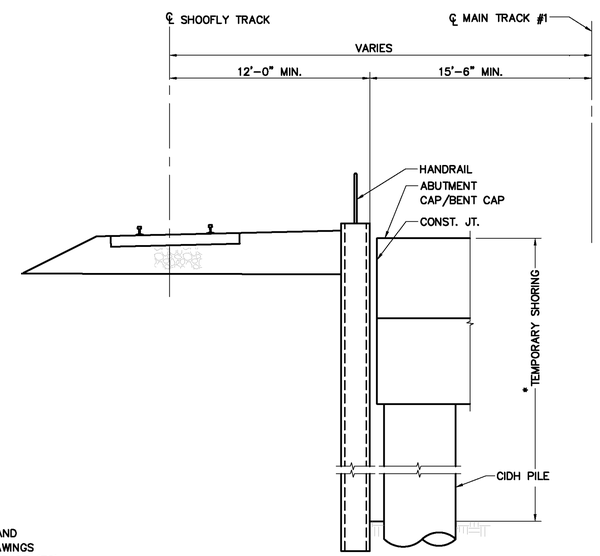

NOTE:
CONTRACTOR SHALL PROVIDE BRACE AND SUBMIT BRACE DESIGN AND SHOP DRAWINGS FOR ANY EXCAVATION BELOW FINISH GRADE (FG). BRACE SHALL NOT BE RELEASED BEFORE BACKFILL IS FILLED TO FG. SEE S4 NOTE 12 FOR BRACE DESIGN REQUIREMENTS. DESIGN SHALL BEAR SEAL OF A CALIFORNIA REGISTERED CIVIL OR STRUCTURAL ENGINEER.

*NOTE:
CONTRACTOR SHALL SUBMIT TEMPORARY SHORING DESIGN TO UPRR FOR APPROVAL. DESIGN SHALL BEAR SEAL BY A CALIFORNIA REGISTERED CIVIL ENGINEER OR STRUCTURAL ENGINEER.

TYPICAL SECTION
1"=5'

BRIDGE CONSTRUCTION SEQUENCE:

STAGE 1:

1. RELOCATE EXISTING UTILITIES WITHIN THE BRIDGE TO THE NEW LOCATIONS.
2. CONSTRUCT TEMPORARY WALL #9 (BEYOND) AND SHOOFLY (BY CONTRACTOR, EXCEPT 30" WATER LINE) AND MOVE RAILROAD OPERATIONS TO SHOOFLY (BY UPRR).
3. INSTALL TEMPORARY SHORING BETWEEN SHOOFLY AND MAIN TRACK, TEMPORARY SHORING SHALL CLEAR UTILITIES.
4. CONSTRUCT SECANT PILES.
5. CONSTRUCT CIDH PILES.
6. EXCAVATE TO 1'-0" BELOW THE BOTTOM OF CAPS.
7. CAST ABUTMENT CAPS AND BENT CAP.
8. EXCAVATE TO FG AND CONSTRUCT BRIDGE.
9. CONSTRUCT APPROACH SLABS AND RW #9 (BEYOND).
10. CONSTRUCT NEW MAIN TRACK #1.
11. MOVE RAIL OPERATIONS TO THE MAIN TRACK #1 (BY UPRR).
12. REMOVE SHOOFLY (BY CONTRACTOR).
13. REMOVE TEMPORARY SHORING.

STAGE 2:

1. CONSTRUCT TEMPORARY SHORING BETWEEN NEW TRACK #1 AND FUTURE TRACK #2.
2. CONSTRUCT SECANT PILES.
3. CONSTRUCT CIDH PILES.
4. EXCAVATE TO 1'-0" BELOW THE BOTTOM OF CAPS. CONSTRUCT APPROACH SLAB FOR FUTURE TRACK #2. EXCAVATE UNDER BRIDGE DECK (EAST SIDE) AND INSTALL 30" WATER LINE (PROVIDE TEMPORARY SHORING AND/OR BRACE AS REQUIRED).
5. CAST ABUTMENT CAPS AND BENT CAPS.
6. EXCAVATE TO FG AND CONSTRUCT BRIDGE.
7. INSTALL BRACE SUPPORTING CIDH PILES AFFECTED BY EXCAVATION OF STORM DRAIN RCB. SEE SHEET S4 NOTE 12 FOR MORE DETAILS.
8. EXCAVATE TO BOTTOM OF STORM DRAIN RCB (EAST SIDE).
9. CONSTRUCT RCB AND ELECTRICAL BUS DUCT AND BACKFILL TO FINISH GRADE. RELEASE BRACES.
10. CONSTRUCT FASCIA WALL ON ABUTMENT WALLS AND PIER COLUMNS AND ROADWAY UNDER THE BRIDGE.
11. CONSTRUCT APPROACH SLAB AND REMOVE TEMPORARY SHORING.

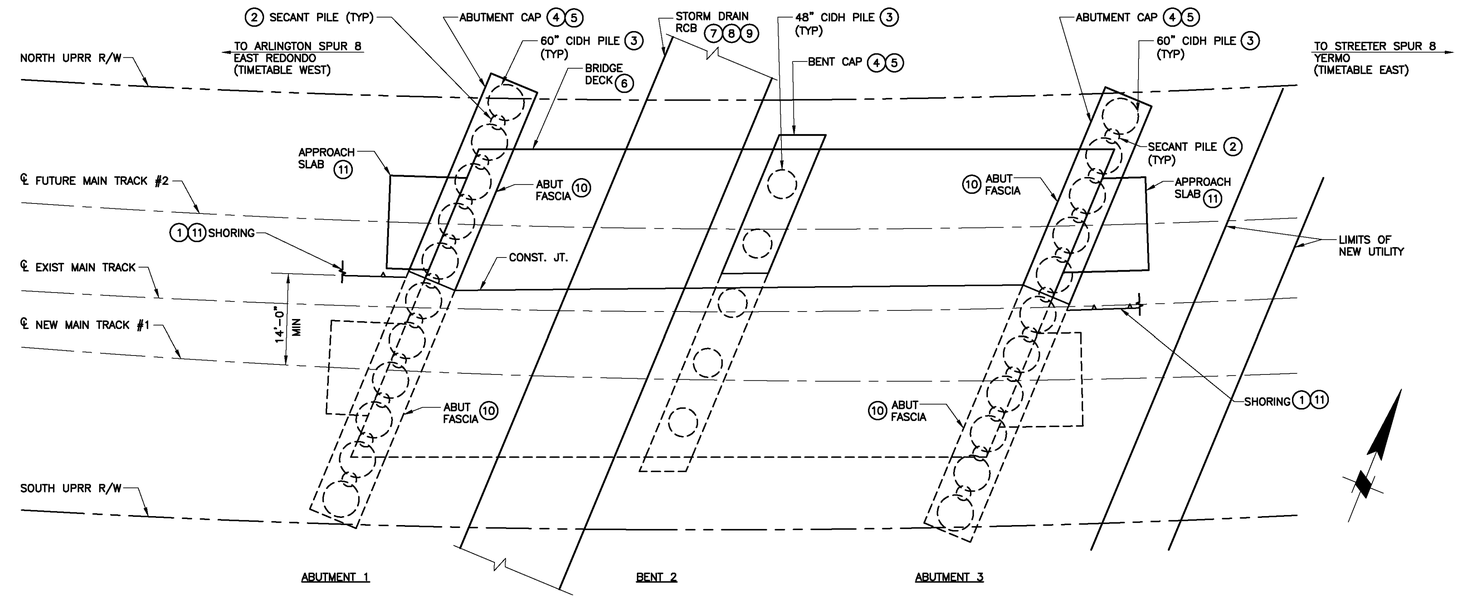

STAGE 2 CONSTRUCTION SEQUENCE
1"=10'

ASBUILT
BID NO. 7185
COMPLETION DATE 03/25/2016
R.E. NAME BONAVENTURE EZEJI

5' 0' 5' 10'
SCALE: 1"=5'

10' 0' 10' 20'
SCALE: 1"=10'

DIGALERT
DIAL TOLL FREE
1-800-422-4133
AT LEAST TWO DAYS BEFORE YOU DIG
UNDERGROUND SERVICE ALERT OF SOUTHERN CALIFORNIA

MOFFATT & NICHOL
3780 KILROY AIRPORT WAY, SUITE 600
LONG BEACH, CALIFORNIA, 90806
562-426-9551

DATE

REGISTERED PROFESSIONAL ENGINEER
YONG DENG
NO. C65629
EXP. 09/30/13
CIVIL
STATE OF CALIFORNIA

MARK	REVISIONS	APPR.	DATE

DESIGNED BY RW DRAWN BY TP CHECKED BY MSN

UPRR BRIDGE 55.54 LOS ANGELES SUB

CITY OF RIVERSIDE, CALIFORNIA
PUBLIC WORKS DEPARTMENT

RIVERSIDE AVE UNDERPASS

PROPOSED CONSTRUCTION STAGING (1 OF 2)

HORIZ. SCALE: AS SHOWN VERT. SCALE: AS SHOWN

STRUCTURE SHEET NO. S3
ACCT. NO. -
W.O. NO. -
R-4240
SHEET 89 OF 146
FILE NO.

DRAWING NAME: \\netapp1b02\ib_projects\831B ib13\CADD\Sheet\STRUCTURE\635501S003.dwg
PLOT DATE: Sep 27, 2015 - 9:29am PLOTTED BY: dhigh

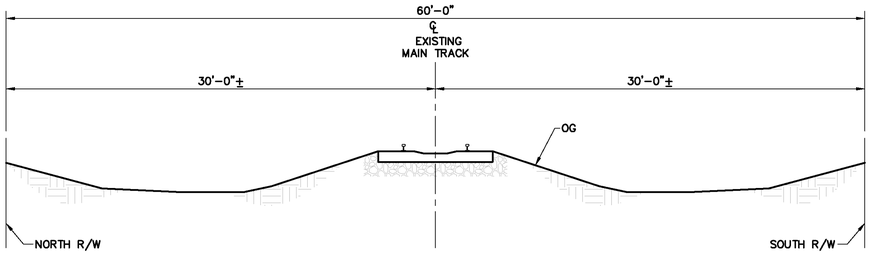

EXISTING CONDITION

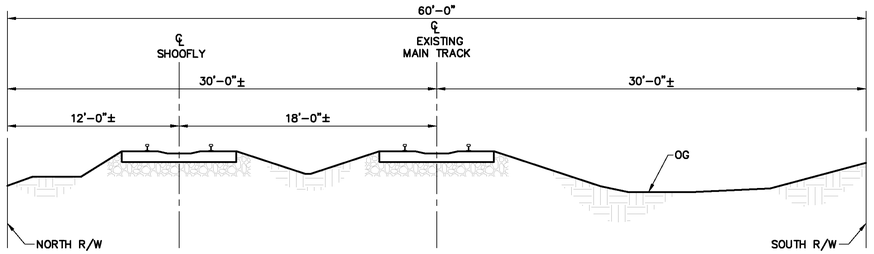

EXISTING CONDITION WITH SHOOFLY TRACK IN PLACE

(CONSTRUCT SHOOFLY AND MOVE RAIL OPERATIONS TO THE SHOOFLY TRACK)

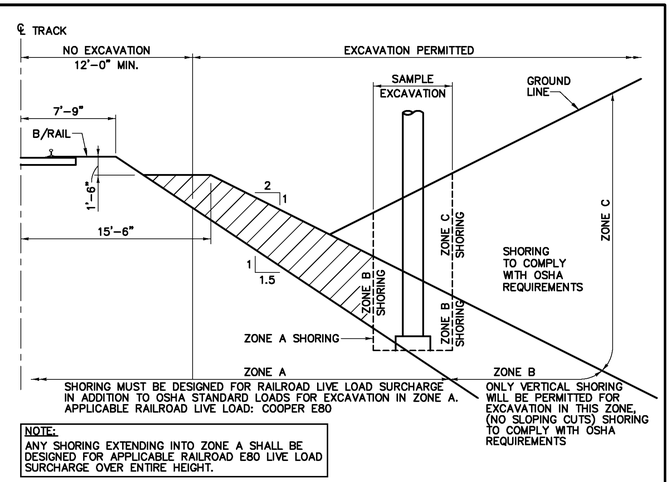

NOTE:
ANY SHORING EXTENDING INTO ZONE A SHALL BE DESIGNED FOR APPLICABLE RAILROAD E80 LIVE LOAD SURCHARGE OVER ENTIRE HEIGHT.

GENERAL EXCAVATION ZONES

NOT TO SCALE

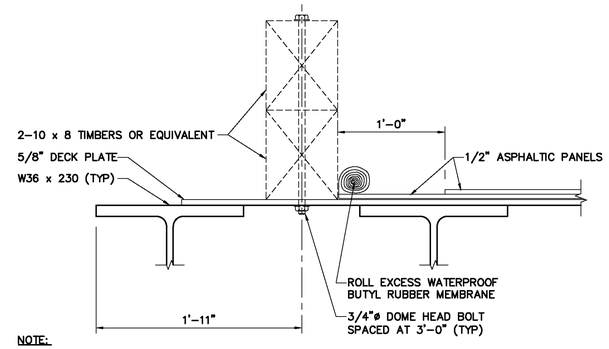

NOTE:
CONTRACTOR SHALL PROVIDE TEMPORARY HANDRAIL TO MEET AREMA 15.8.5 WITH TEMPORARY TIMBER BALLAST RETAINER TO PROTECT TRAINMEN DURING CONSTRUCTION.

TEMPORARY TIMBER BALLAST RETAINER DETAIL

1 1/2"=1'-0"

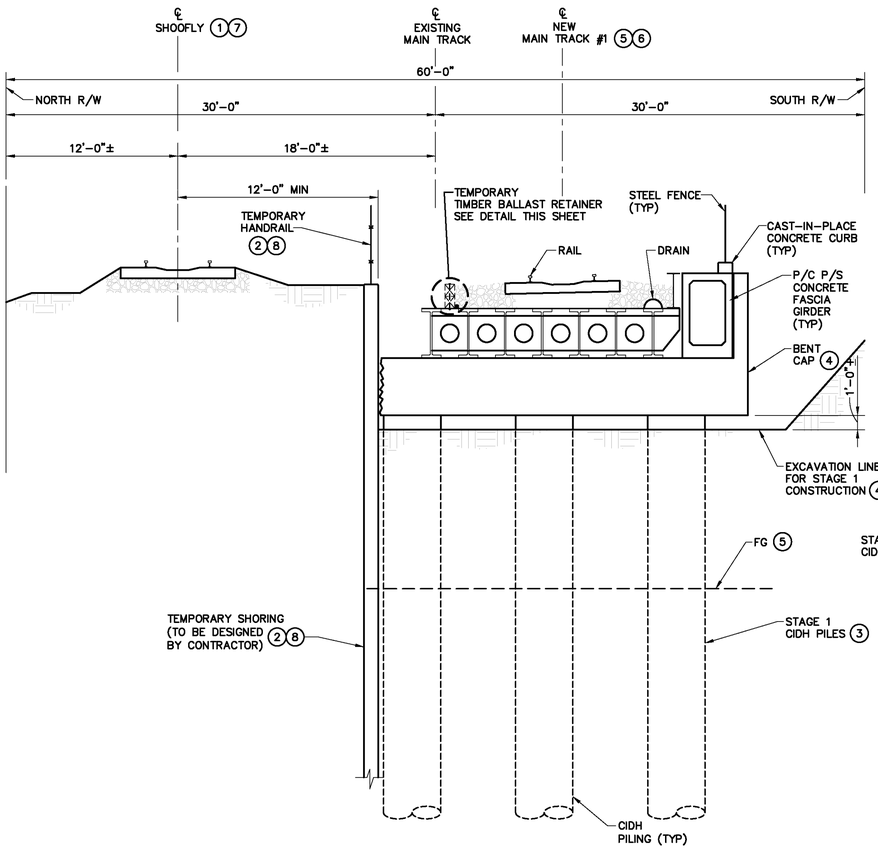

STAGE 1 CONSTRUCTION

(BEGINS ONCE RAIL OPERATIONS HAVE MOVED TO THE SHOOFLY TRACK)

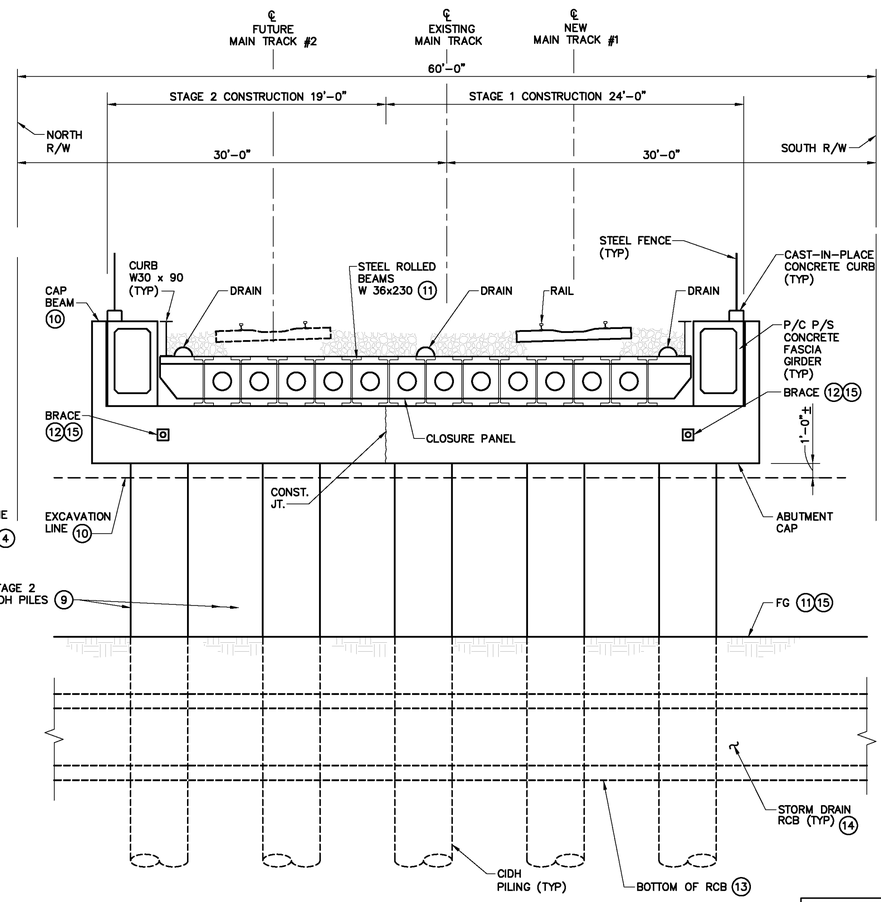

STAGE 2 CONSTRUCTION

(BEGINS ONCE RAIL OPERATIONS HAVE MOVED TO THE NEW TRACK #1)

CONSTRUCTION SEQUENCE:

1. CONSTRUCT SHOOFLY AND TEMPORARY RW #9 (BY CONTRACTOR) AND MOVE RAILROAD OPERATIONS TO SHOOFLY.
2. CONSTRUCT TEMPORARY SHORING, THE TEMPORARY SHORING SHALL BE DESIGNED FOR COOPER E-80 LOADING AND MEET UPRR REQUIREMENTS.
3. CONSTRUCT STAGE 1 CIDH PILES AND SECANT PILES.
4. EXCAVATE STAGE 1 RIVERSIDE AVENUE TO 1'-0"± BELOW BENT CAP AND CONSTRUCT ABUTMENT CAPS AND BENT CAP.
5. EXCAVATE TO FG AND CONSTRUCT STAGE 1 BRIDGE. AND CONSTRUCT MAIN TRACK #1 (TRACK BY UPRR).
6. MOVE TRACK OPERATIONS TO MAIN TRACK #1.
7. REMOVE SHOOFLY.
8. REMOVE STAGE 1 TEMPORARY SHORING AND CONSTRUCT STAGE 2 TEMPORARY SHORING.
9. CONSTRUCT STAGE 2 CIDH PILES AND SECANT PILES.
10. EXCAVATE 1'-0"± BELOW BOTTOM OF CAP BEAM AND CONSTRUCT CAPS.
11. EXCAVATE TO FG AND CONSTRUCT STAGE 2 BRIDGE.
12. INSTALL BRACE. CONTRACTOR SHALL PROVIDE DESIGN AND SHOP DRAWING OF BRACE FOR ENGINEER'S APPROVAL PRIOR TO EXCAVATION. BRACE FORCE F1 = 15 KIPS/FT @ SERVICE.

NOTE:

SEE S3 NOTE FOR TEMPORARY SHORING AND BRACE SUPPORTING DESIGN REQUIREMENTS.

SECTION AT BENT 2

(SECTION AT ABUTMENT SIMILAR)
SCALE: 1"= 5'

ASBUILT

BID NO. 7185
COMPLETION DATE 03/25/2016
R.E. NAME BONAVENTURE EZEJI

1'-0" 0'-0" 6" 1'-0"
SCALE: 1 1/2"=1'-0"

5' 0' 5' 10'
SCALE: 1"=5'

UPRR BRIDGE 55.54 LOS ANGELES SUB

DIGALERT
DIAL TOLL FREE
1-800-422-4133
AT LEAST TWO DAYS BEFORE YOU DIG
UNDERGROUND SERVICE ALERT OF SOUTHERN CALIFORNIA

MOFFATT & NICHOL
3780 KILROY AIRPORT WAY, SUITE 600
LONG BEACH, CALIFORNIA, 90806
562-426-9551

DATE

REGISTERED PROFESSIONAL ENGINEER
YONG DENG
NO. C65629
EXP. 09/30/13
CIVIL
STATE OF CALIFORNIA

MARK	REVISIONS	APPR.	DATE

DESIGNED BY RW DRAWN BY TP CHECKED BY MSN

CITY OF RIVERSIDE, CALIFORNIA
PUBLIC WORKS DEPARTMENT

RIVERSIDE AVE UNDERPASS

PROPOSED CONSTRUCTION STAGING (2 OF 2)

HORIZ. SCALE: AS SHOWN VERT. SCALE: AS SHOWN

STRUCTURE SHEET NO. S4
ACCT. NO. -
W.O. NO. -
R-4240
SHEET 90 OF 146
FILE NO.

DRAWING NAME: \\metapplib02\lb_projects\8318 lb13\CADD\Sheet\STRUCTURE\8355015S04.dwg
PLOT DATE: Sep 27, 2016 - 9:29am PLOTTED BY: dleigh

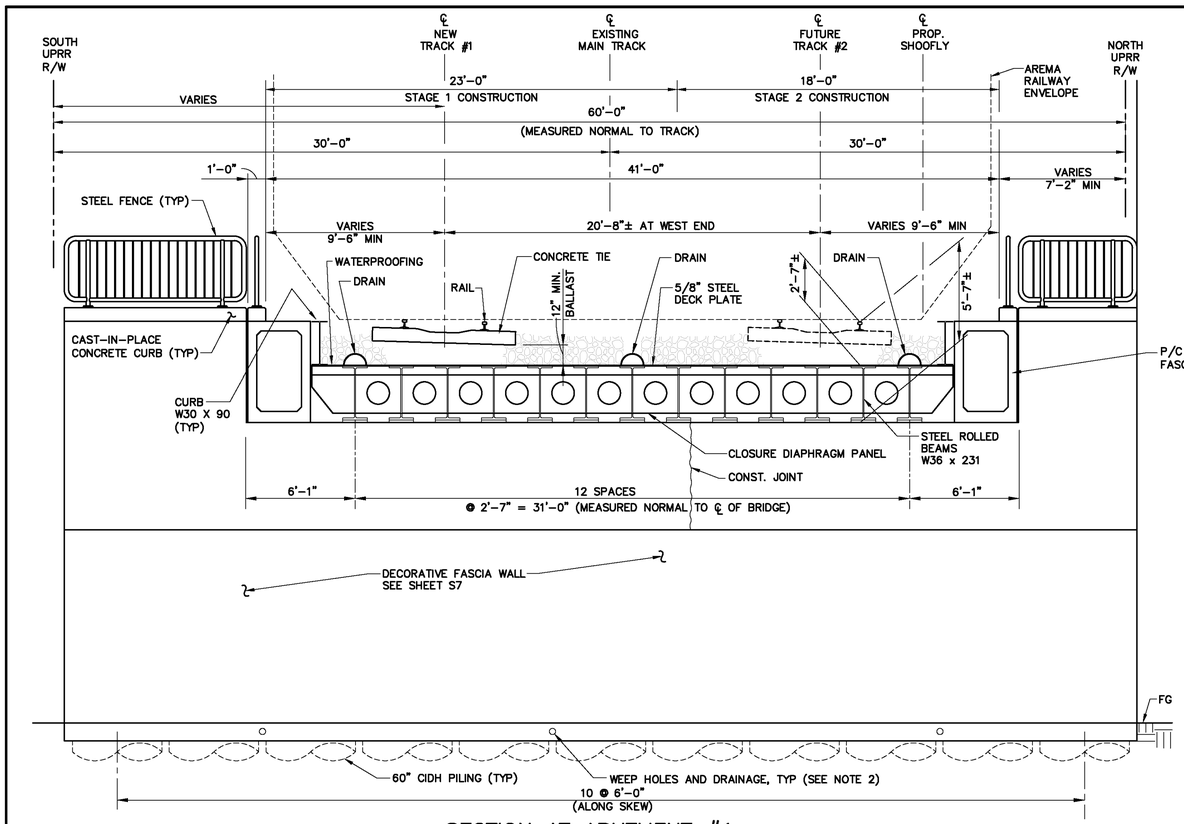

SECTION AT ABUTMENT #1

(LOOKING TRACK DOWNSTATION)
SCALE: 1/4"= 1'-0"

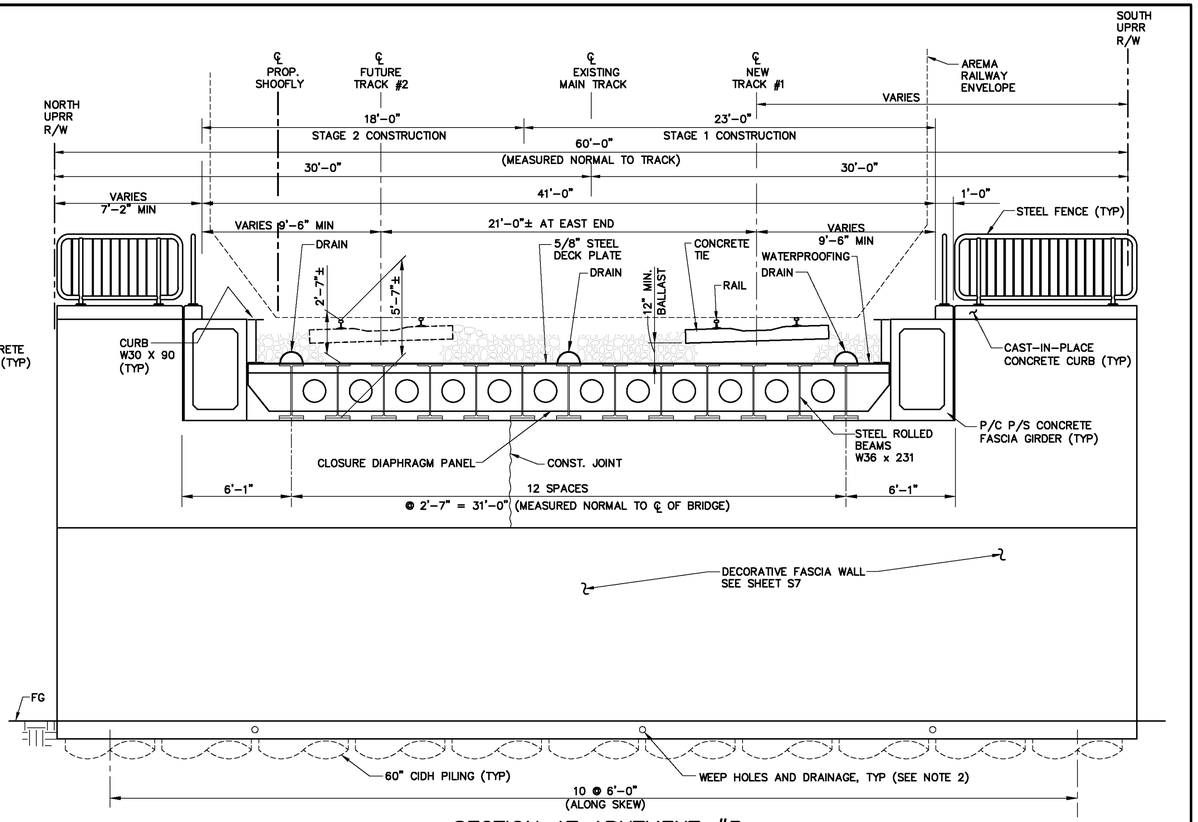

SECTION AT ABUTMENT #3

(LOOKING TRACK UPSTATION)
SCALE: 1/4"= 1'-0"

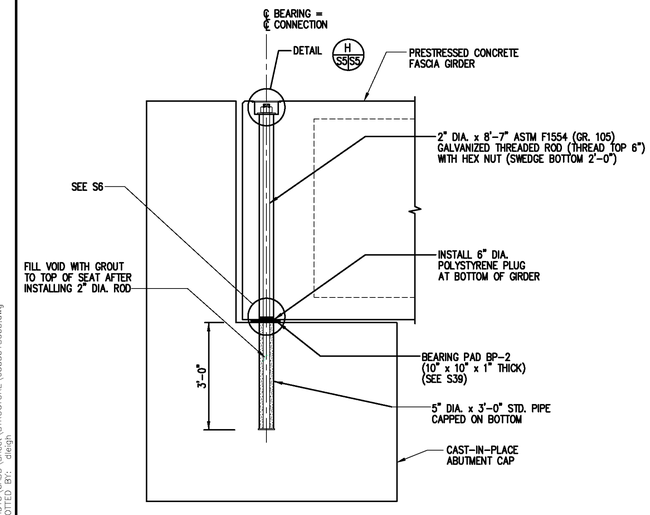

FASCIA GIRDER CONNECTION DETAIL

SCALE: 1/2" = 1'-0" (AT ABUTMENTS #1 AND #3)

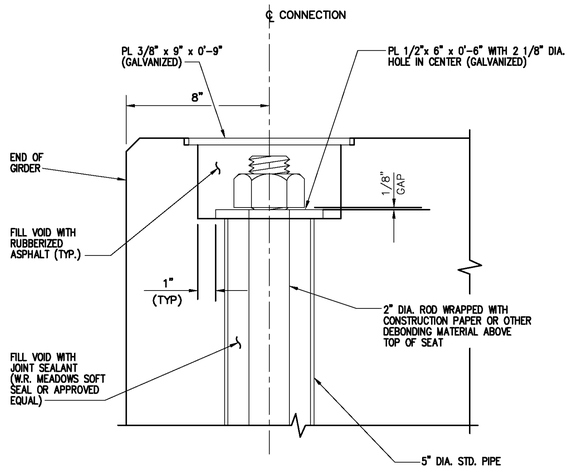

DETAIL H

SCALE: 1" = 1'-0"

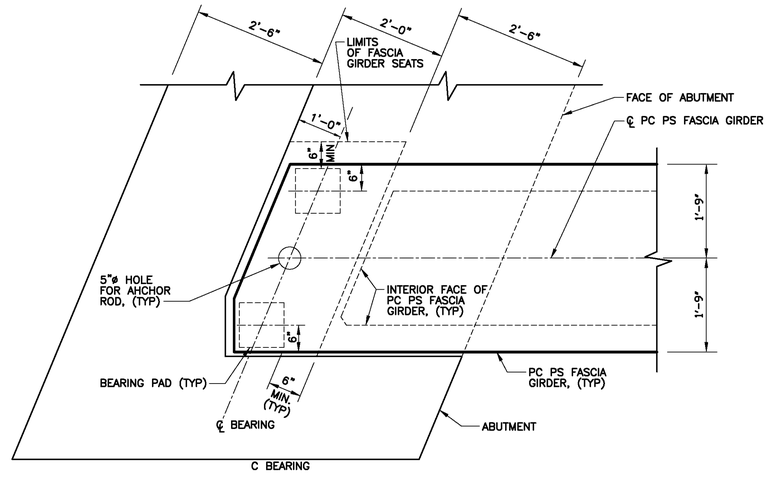

TYPICAL FASCIA GIRDER BEARING PAD FRAMING AT ABUTMENT

SCALE: 3/4"= 1'-0"

NOTES:

1. BEARING ANCHORS NOT SHOWN FOR CLARITY.
2. WEEP HOLE AND DRAIN OUTLET SHALL BE UNDER THE SIDEWALK AND DRAIN INTO STREET.

ASBUILT

BID NO. 7185

COMPLETION DATE 03/25/2016

R.E. NAME BONAVENTURE EZEJI

4'-0" 0'-0" 4'-0" 8'-0"
SCALE: 1/4"=1'-0"

2'-0" 0'-0" 2'-0" 4'-0"
SCALE: 1/2"=1'-0"

1'-0" 0'-0" 1'-0" 2'-0"
SCALE: 1"=1'-0"

DIGALERT
DIAL TOLL FREE
1-800-422-4133
AT LEAST TWO DAYS BEFORE YOU DIG
UNDERGROUND SERVICE ALERT OF SOUTHERN CALIFORNIA

MOFFATT & NICHOL
3780 KILROY AIRPORT WAY, SUITE 600
LONG BEACH, CALIFORNIA, 90806
562-426-9551

DATE

REGISTERED PROFESSIONAL ENGINEER
YONG DENG
NO. C65629
EXP. 09/30/13
CIVIL
STATE OF CALIFORNIA

MARK	REVISIONS	APPR.	DATE

DESIGNED BY RW DRAWN BY TP CHECKED BY MSN

HORIZ. SCALE: AS SHOWN VERT. SCALE: AS SHOWN

UPRR BRIDGE 55.54 LOS ANGELES SUB

CITY OF RIVERSIDE, CALIFORNIA
PUBLIC WORKS DEPARTMENT

RIVERSIDE AVE UNDERPASS

TYPICAL SECTION (ABUT #1 AND ABUT #3)

STRUCTURE SHEET NO. S5

ACCT. NO. -
W.O. NO. -

R-4240

SHEET 91 OF 146

FILE NO.

DRAWING NAME: \\retopplb02\lb_projects\6318 lb13\CADD\Sheet\STRUCTURE\635501S005.dwg
PLOT DATE: Sep 27, 2016 - 9:29am PLOTTED BY: dleigh

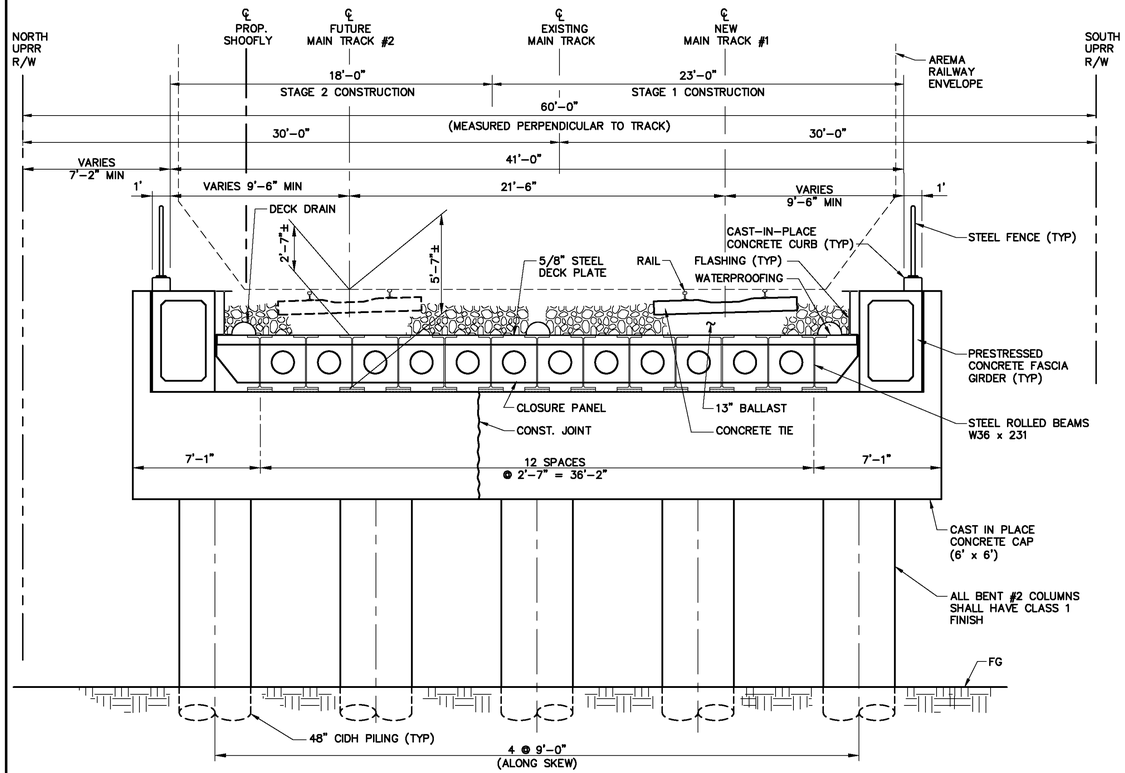

SECTION AT BENT NO 2

(LOOKING TRACK UPSTATION)
SCALE: 1/4"= 1'-0"

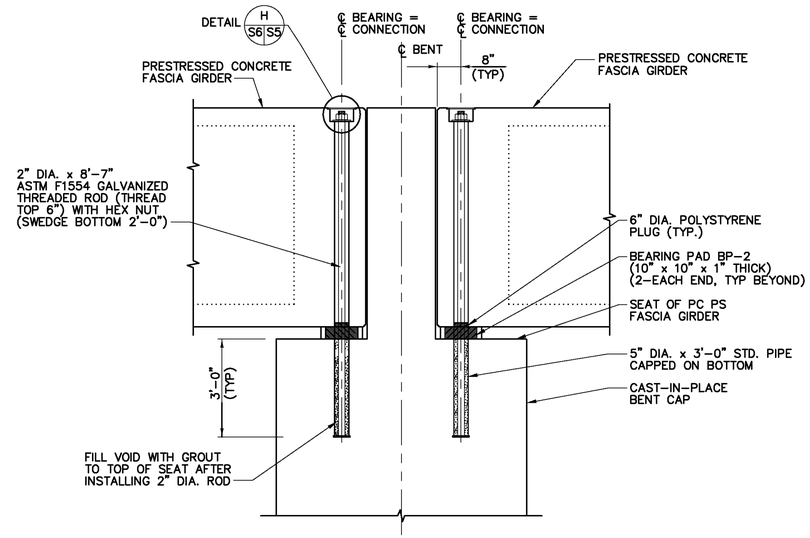

FASCIA GIRDER CONNECTION DETAIL

N.T.S. (AT BENT #2)

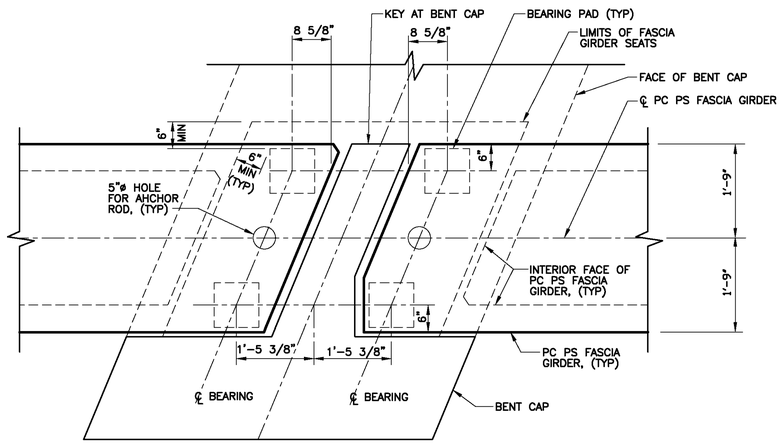

TYPICAL FASCIA GIRDER BEARING PAD FRAMING AT BENT 2

SCALE: 3/4"= 1'-0"

ASBUILT

BID NO. 7185
COMPLETION DATE 03/25/2016
R.E. NAME BONAVENTURE EZEJI

2'-0" 0'-0" 1'-0" 2'-0"
SCALE: 3/4"=1'-0"

4'-0" 0'-0" 4'-0" 8'-0"
SCALE: 1/4"=1'-0"

DIGALERT
DIAL TOLL FREE 1-800-422-4133
AT LEAST TWO DAYS BEFORE YOU DIG
UNDERGROUND SERVICE ALERT OF SOUTHERN CALIFORNIA

MOFFATT & NICHOL
3780 KILROY AIRPORT WAY, SUITE 600
LONG BEACH, CALIFORNIA, 90806
562-426-9551

REGISTERED PROFESSIONAL ENGINEER
YONG DENG
NO. C65629
EXP. 09/30/13
CIVIL
STATE OF CALIFORNIA

DATE

MARK	REVISIONS	APPR.	DATE

DESIGNED BY RW DRAWN BY TP CHECKED BY MSN

UPRR BRIDGE 55.54 LOS ANGELES SUB

CITY OF RIVERSIDE, CALIFORNIA
PUBLIC WORKS DEPARTMENT

RIVERSIDE AVE UNDERPASS

TYPICAL SECTION (AT BENT #2)

HORIZ. SCALE: AS SHOWN VERT. SCALE: AS SHOWN

STRUCTURE SHEET NO. S6
ACCT. NO. -
W.O. NO. -
R-4240
SHEET 92 OF 146
FILE NO.

DRAWING NAME: \\netapp1b02\ib_projects\6318 ib13\CADD\Sheet\STRUCTURE\635501S006.dwg
PLOT DATE: Sep 27, 2016 - 9:29am PLOTTED BY: dhigh

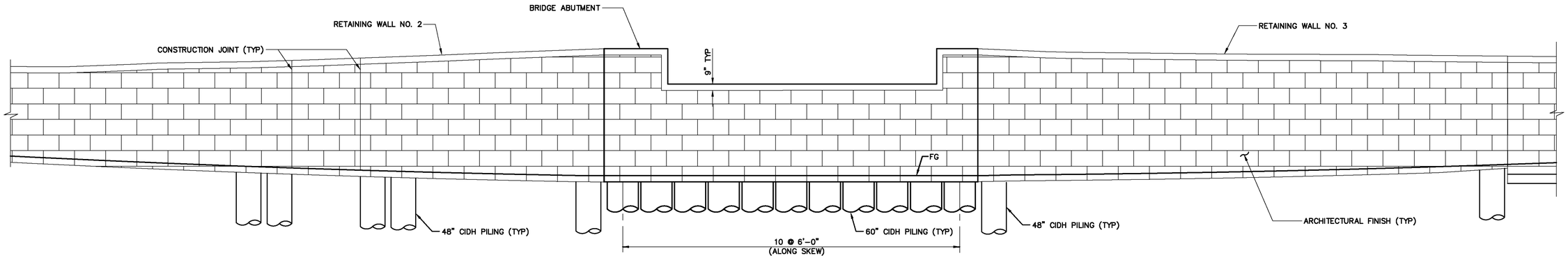

ARCHITECTURAL TREATMENT AT CIDH PILE WALL
(RW 2 SHOWN, RW 1, RW 5, RW 7 AND RW 8 SIMILAR)

ABUTMENT ARCHITECTURAL TREATMENT
(ABUT 1 SHOWN, ABUT 2 SIMILAR)
SCALE: 1/8"= 1'-0"

ARCHITECTURAL TREATMENT AT CIDH PILE AND CANTILEVER WALL
(RW 3 SHOWN, RW 4 SIMILAR)

NOTES:

1. FOR ARCHITECTURAL FINISH, SEE SPECIFICATIONS.
2. ALL BENT #2 COLUMNS SHALL HAVE CLASS 1 FINISH.

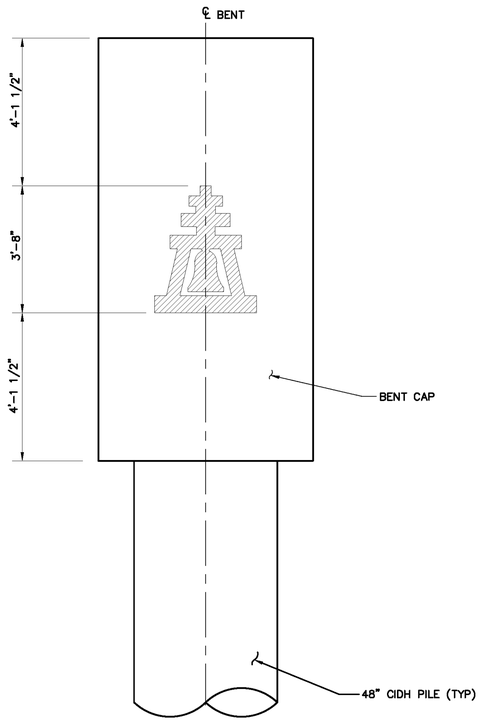

ELEVATION
SCALE: 1/2" = 1'-0"

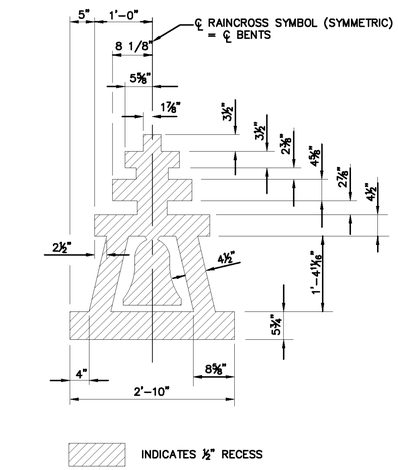

RAINCROSS DETAIL SECTION
NO SCALE

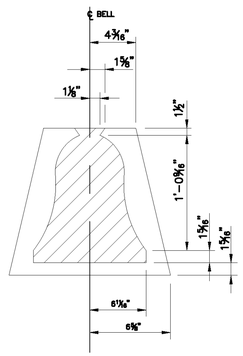

BELL DETAIL
NO SCALE

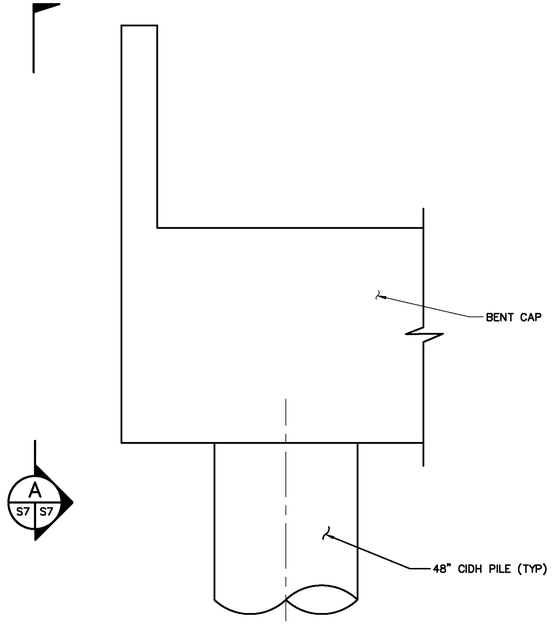

PARTIAL BENT ELEVATION
SCALE: 1/2" = 1'-0"

ASBUILT

BID NO. 7185
COMPLETION DATE 03/25/2016
R.E. NAME BONAVENTURE EZEJI

4'-0" 0'-0" 4'-0" 8'-0"
SCALE: 1/4"=1'-0"
2'-0" 0'-0" 2'-0" 4'-0"
SCALE: 1/2"=1'-0"

DIGALERT
DIAL TOLL FREE
1-800-422-4133
AT LEAST TWO DAYS BEFORE YOU DIG
UNDERGROUND SERVICE ALERT OF SOUTHERN CALIFORNIA

MOFFATT & NICHOL
3780 KILROY AIRPORT WAY, SUITE 600
LONG BEACH, CALIFORNIA, 90806
562-426-9551

DATE

REGISTERED PROFESSIONAL ENGINEER
YONG DENG
NO. C65629
EXP. 09/30/13
CIVIL
STATE OF CALIFORNIA

MARK	REVISIONS	APPR.	DATE

DESIGNED BY RW DRAWN BY TP CHECKED BY MSN

UPRR BRIDGE 55.54 LOS ANGELES SUB

STRUCTURE SHEET NO. S7

CITY OF RIVERSIDE, CALIFORNIA
PUBLIC WORKS DEPARTMENT

ACCT. NO. -
W.O. NO. -

RIVERSIDE AVE UNDERPASS

R-4240

ARCHITECTURAL TREATMENT

SHEET 93 OF 146

HORIZ. SCALE: AS SHOWN VERT. SCALE: AS SHOWN

FILE NO.

DRAWING NAME: \\ntaopb02\ib_projects\8318_ib13\CADD\Sheet\STRUCTURE\635501S007.dwg
PLOT DATE: Sep 27, 2016 - 9:29am PLOTTED BY: dleigh

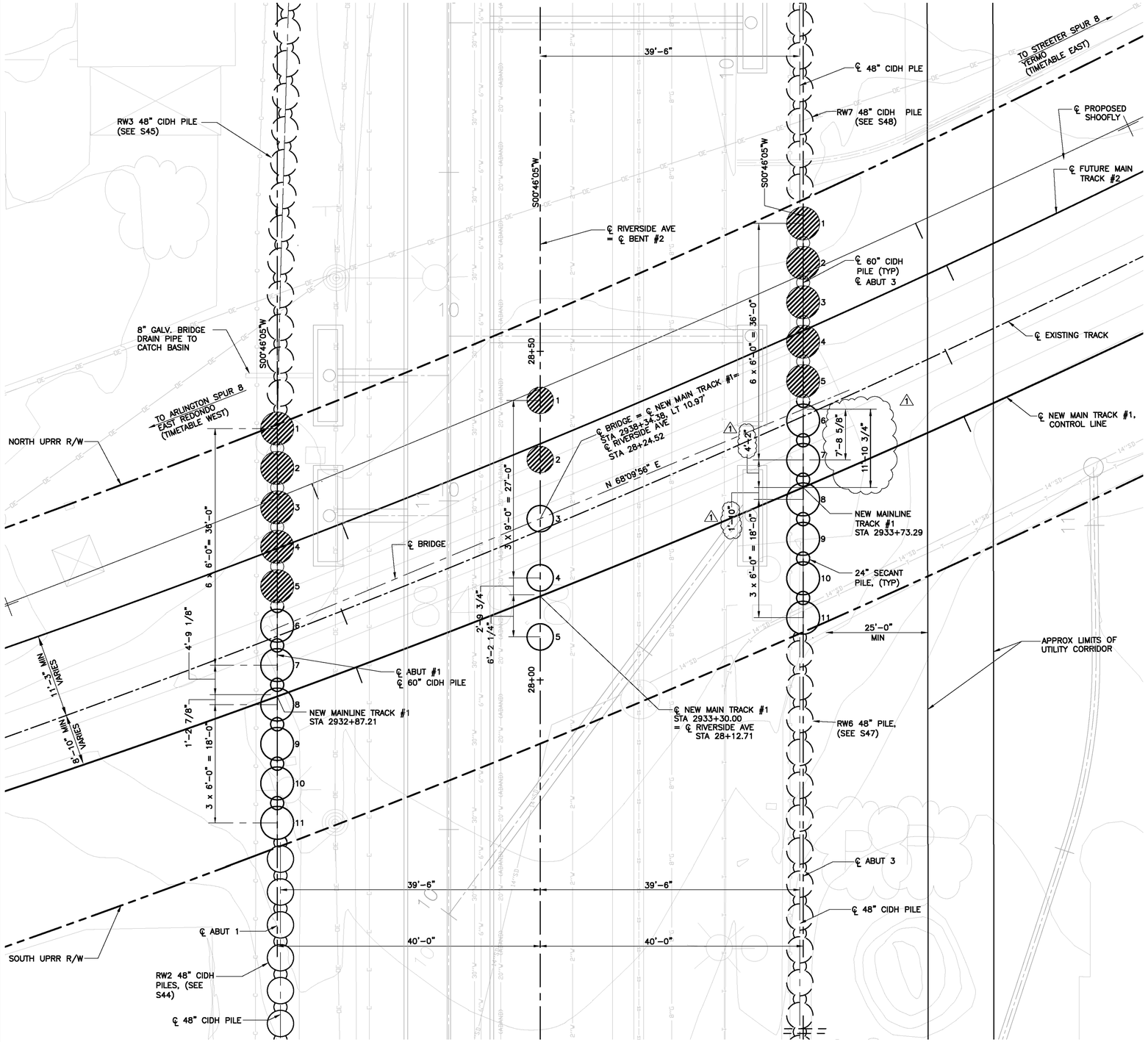

LEGEND

- STAGE 1 CONSTRUCTION
- STAGE 2 CONSTRUCTION
- RW CONSTRUCTION

CAST IN DRILLED HOLE (CIDH) PILE FOUNDATIONS

LOCATION	PILE NUMBER	DIAMETER	CUT-OFF ELEVATION (+t)	TIP ELEVATION (+t)	ESTIMATED LENGTH (+t)	DESIGN LOAD (KIPS)
ABUTMENT #1	1	60"	839.92	788.67	51.25	240
ABUTMENT #1	2	60"	839.92	788.67	51.25	240
ABUTMENT #1	3	60"	839.92	788.67	51.25	240
ABUTMENT #1	4	60"	839.92	788.67	51.25	240
ABUTMENT #1	5	60"	839.92	788.67	51.25	240
ABUTMENT #1	6	60"	839.92	788.67	51.25	240
ABUTMENT #1	7	60"	839.92	788.67	51.25	240
ABUTMENT #1	8	60"	839.92	788.67	51.25	240
ABUTMENT #1	9	60"	839.92	788.67	51.25	240
ABUTMENT #1	10	60"	839.92	788.67	51.25	240
ABUTMENT #1	11	60"	839.92	788.67	51.25	240
BENT #2	1	48"	840.40	766.40	74.00	480
BENT #2	2	48"	840.40	766.40	74.00	480
BENT #2	3	48"	840.40	766.40	74.00	480
BENT #2	4	48"	840.40	766.40	74.00	480
BENT #2	5	48"	840.40	766.40	74.00	480
ABUTMENT #3	1	60"	840.60	788.35	52.25	240
ABUTMENT #3	2	60"	840.60	788.35	52.25	240
ABUTMENT #3	3	60"	840.60	788.35	52.25	240
ABUTMENT #3	4	60"	840.60	788.35	52.25	240
ABUTMENT #3	5	60"	840.60	788.35	52.25	240
ABUTMENT #3	6	60"	840.60	788.35	52.25	240
ABUTMENT #3	7	60"	840.60	788.35	52.25	240
ABUTMENT #3	8	60"	840.60	788.35	52.25	240
ABUTMENT #3	9	60"	840.60	788.35	52.25	240
ABUTMENT #3	10	60"	840.60	788.35	52.25	240
ABUTMENT #3	11	60"	840.60	788.35	52.25	240

SECANT PILE (SOILCRETE OR JET GROUTED SOIL COLUMNS)

LOCATION	PILE NUMBER	MINIMUM DIAMETER	CUT-OFF ELEVATION	TIP ELEVATION	ESTIMATED LENGTH	DESIGN LOAD
ABUTMENT #1	N/A	2'-0"	839.92	826.87	13.05	N/A
ABUTMENT #3	N/A	2'-0"	840.60	826.87	13.05	N/A

FOUNDATION PLAN

SCALE: 1/8"= 1'-0"

8'-0" 0'-0" 8'-0" 16'-0"

SCALE: 1/8"=1'-0"

ASBUILT

BID NO. 7185

COMPLETION DATE 03/25/2016

R.E. NAME BONAVENTURE EZEJI

DIGALERT
DIAL TOLL FREE
1-800-422-4133
AT LEAST TWO DAYS BEFORE YOU DIG
UNDERGROUND SERVICE ALERT OF SOUTHERN CALIFORNIA

MOFFATT & NICHOL
3780 KILROY AIRPORT WAY, SUITE 600
LONG BEACH, CALIFORNIA, 90806
562-426-9551

DATE

REGISTERED PROFESSIONAL ENGINEER
YONG DENG
NO. C65629
EXP. 09/30/13
CIVIL
STATE OF CALIFORNIA

MARK	REVISIONS	APPR.	DATE
1	REVISE/ADD REF. DIMENSIONS	YD	1/13/14

DESIGNED BY RW DRAWN BY TP CHECKED BY MSN

UPRR BRIDGE 55.54 LOS ANGELES SUB

CITY OF RIVERSIDE, CALIFORNIA
PUBLIC WORKS DEPARTMENT

RIVERSIDE AVE UNDERPASS

FOUNDATION PLAN

HORIZ. SCALE: AS SHOWN VERT. SCALE: AS SHOWN

STRUCTURE SHEET NO. S8

ACCT. NO. -
W.O. NO. -

R-4240

SHEET 94 OF 146

FILE NO.

DRAWING NAME: \\netapp\bo02\lb_projects\8318 (b13)\CADD\Sheet\STRUCTURE\635501S00B.dwg
PLOT DATE: Sep 27, 2016 - 9:29am PLOTTED BY: dleigh

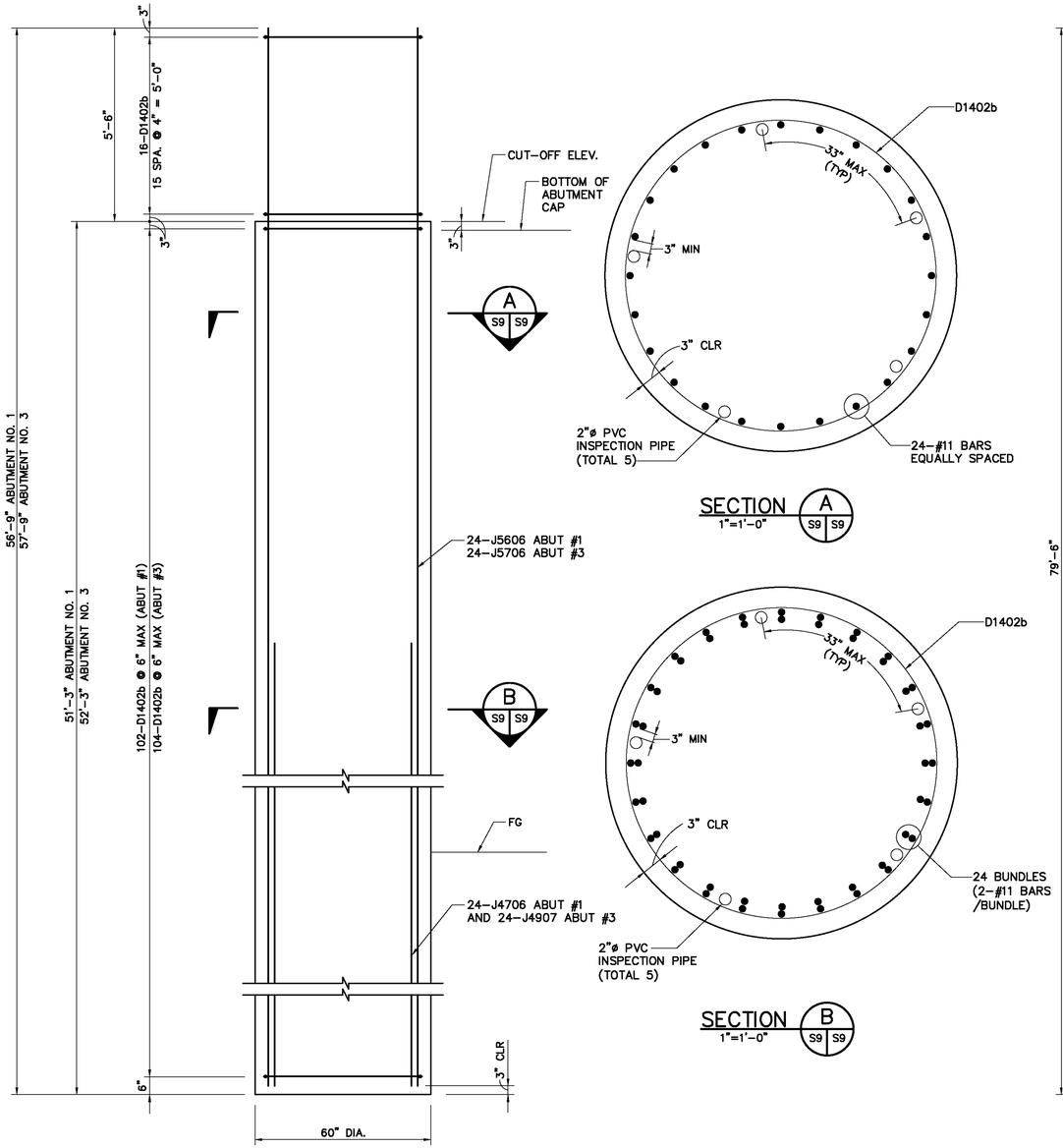

ABUTMENT CIDH PILE DETAILS

1/2"=1'-0"

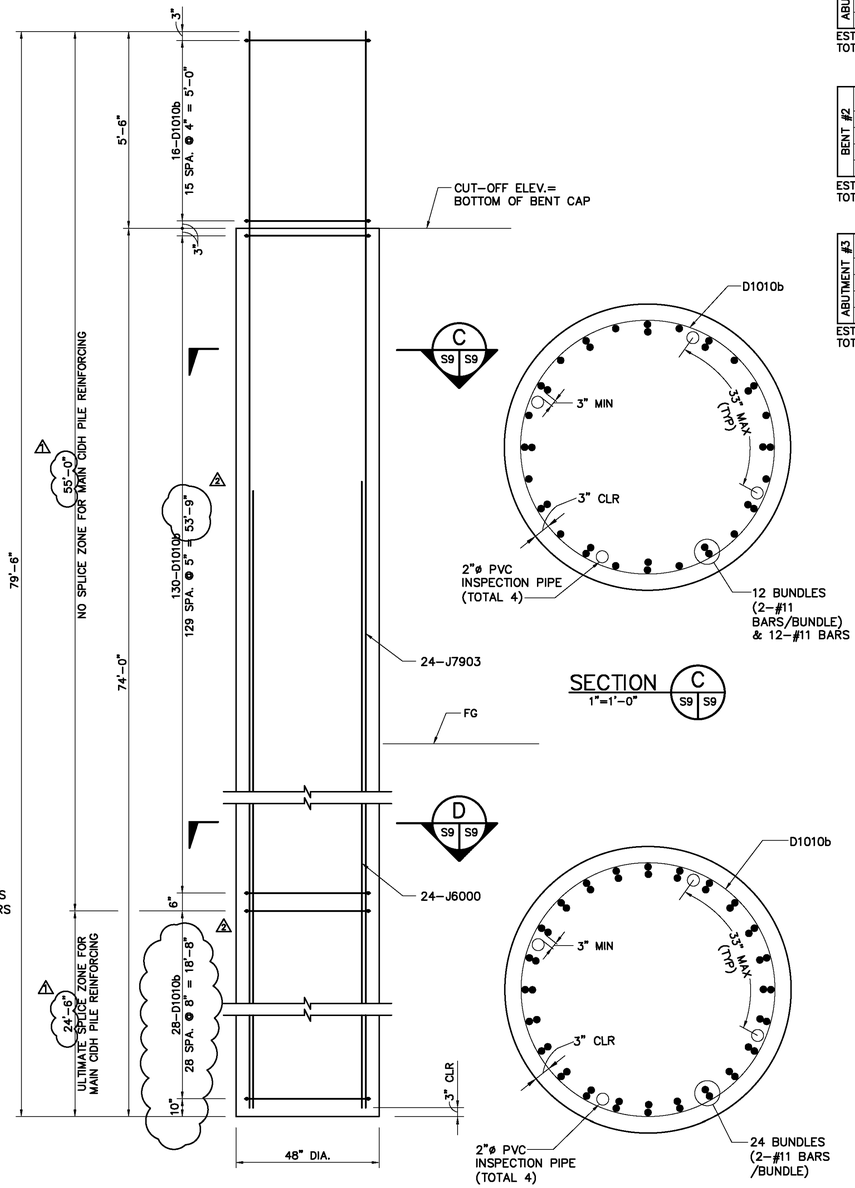

BENT CIDH PILE DETAILS

1/2"=1'-0"

REINFORCING SCHEDULE — ABUTMENT #1

TOTAL	PER PILE	MARK	SIZE	LENGTH	SHAPE
1287	117	D1402b	#5	14'-2"	○
264	24	J4706	#11	47'-6"	——
264	24	J5606	#11	56'-6"	——

EST. WT. OF REINFORCING STEEL PER PILE ABUTMENT #1 = 14,990 LB.
TOTAL EST. WT. OF REINFORCING STEEL ABUTMENT #1 = 164,890 LB.

REINFORCING SCHEDULE — BENT #2

TOTAL	PER PILE	MARK	SIZE	LENGTH	SHAPE
870	174	D1010b	#5	10'-10"	○
120	36	J7903	#11	79'-3"	——
120	12	J6000	#11	60'-0"	——

EST. WT. OF REINFORCING STEEL PER PILE BENT #2 = 20,949 LB.
TOTAL EST. WT. OF REINFORCING STEEL BENT #2 = 104,747 LB.

REINFORCING SCHEDULE — ABUTMENT #3

TOTAL	PER PILE	MARK	SIZE	LENGTH	SHAPE
1298	118	D1402b	#5	14'-2"	○
264	24	J4907	#11	49'-7"	——
264	24	J5706	#11	57'-0"	——

EST. WT. OF REINFORCING STEEL PER PILE ABUTMENT #3 = 15,383 LB.
TOTAL EST. WT. OF REINFORCING STEEL ABUTMENT #3 = 169,215 LB.

BENDING DIAGRAM

(DIMENSIONS ARE OUT TO OUT)

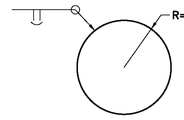

D1010b

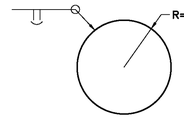

D1402b

NOTE:
BAR DESIGNATIONS CONSIST OF BAR SIZE & LENGTH FOLLOWED BY THE LETTER "b" IF BENT. BAR SIZES ARE REPRESENTED BY THE LETTERS A THROUGH L CORRESPONDING TO BAR SIZE #2 THROUGH #18. BAR LENGTHS ARE GIVEN IN FEET AND INCHES; THE LAST TWO DIGITS ARE INCHES. FOR BAR DESIGNATIONS FOLLOWED BY THE LETTER "h", BARS SHALL BE HEADED

EST. CONCRETE QUANTITIES

ABUTMENT #1		BENT #2		ABUTMENT #3	
TOTAL (CU. YD.)	PER PILE (CU. YD.)	TOTAL (CU. YD.)	PER PILE (CU. YD.)	TOTAL (CU. YD.)	PER PILE (CU. YD.)
405	36.8	170	34.0	408	37.1

NOTES:
1. FOR CONCRETE NOTES, SEE SHEET S2.
2. VERTICAL REINFORCING IN PILES MUST BE ORIENTED AS SHOWN IN SECTIONS, THIS SHEET. PRECISE PLACEMENT IS ESSENTIAL TO FACILITATE PLACEMENT OF REINFORCING STEEL IN CAPS.
3. IN THE ULTIMATE SPLICE ZONE, SPLICES OF MAIN CIDH PILE VERTICAL REINFORCING SHALL BE STAGGERED. ALL HOOP SPLICES SHALL BE ULTIMATE BUTT-WELD. ULTIMATE BUTT-WELDED SPLICES THAT PROVIDE MIN. 100% ULTIMATE CAPACITY OF UNWELDED BAR.
4. FOR PILE NUMBERING, SEE SHEET S8.
5. ALL SPLICES IN BENT CIDH PILES SHALL BE CALTRANS PRE-APPROVED "ULTIMATE-COUPLER" OR "ULTIMATE-SPLICE". ⚠1

2'-0" 0'-0" 2'-0" 4'-0"

SCALE: 1/2"=1'-0"

ASBUILT

BID NO. 7185
COMPLETION DATE 03/25/2016
R.E. NAME BONAVENTURE EZEJI

DIGALERT
DIAL TOLL FREE
1-800-422-4133
AT LEAST TWO DAYS BEFORE YOU DIG
UNDERGROUND SERVICE ALERT OF SOUTHERN CALIFORNIA

MOFFATT & NICHOL
3780 KILROY AIRPORT WAY, SUITE 600
LONG BEACH, CALIFORNIA, 90806
562-426-9551

DATE

REGISTERED PROFESSIONAL ENGINEER — YONG DENG — NO. C65629 — EXP. 09/30/13 — CIVIL — STATE OF CALIFORNIA

MARK	REVISIONS	APPR.	DATE
⚠2	SPECIFIED HOOPS AND DIMENSIONS IN BENT PILES	YD	03/11/14
⚠1	SPECIFIED SPLICE REQUIREMENTS IN BENT PILES	YD	10/16/13

DESIGNED BY RW DRAWN BY TP CHECKED BY MSN

UPRR BRIDGE 55.54 LOS ANGELES SUB

CITY OF RIVERSIDE, CALIFORNIA
PUBLIC WORKS DEPARTMENT

RIVERSIDE AVE UNDERPASS

CIDH PILE DETAILS AND REINFORCING SCHEDULES

HORIZ. SCALE: AS SHOWN VERT. SCALE: AS SHOWN

STRUCTURE SHEET NO. S9
ACCT. NO. -
W.O. NO. -
R-4240
SHEET 95 OF 146
FILE NO.

DRAWING NAME: \\metapplib02\lb_projects\6318 lb13\CADD\Sheet\STRUCTURE\635501S009_Addendum1.dwg
PLOT DATE: Sep 27, 2016 - 9:29am PLOTTED BY: dleigh

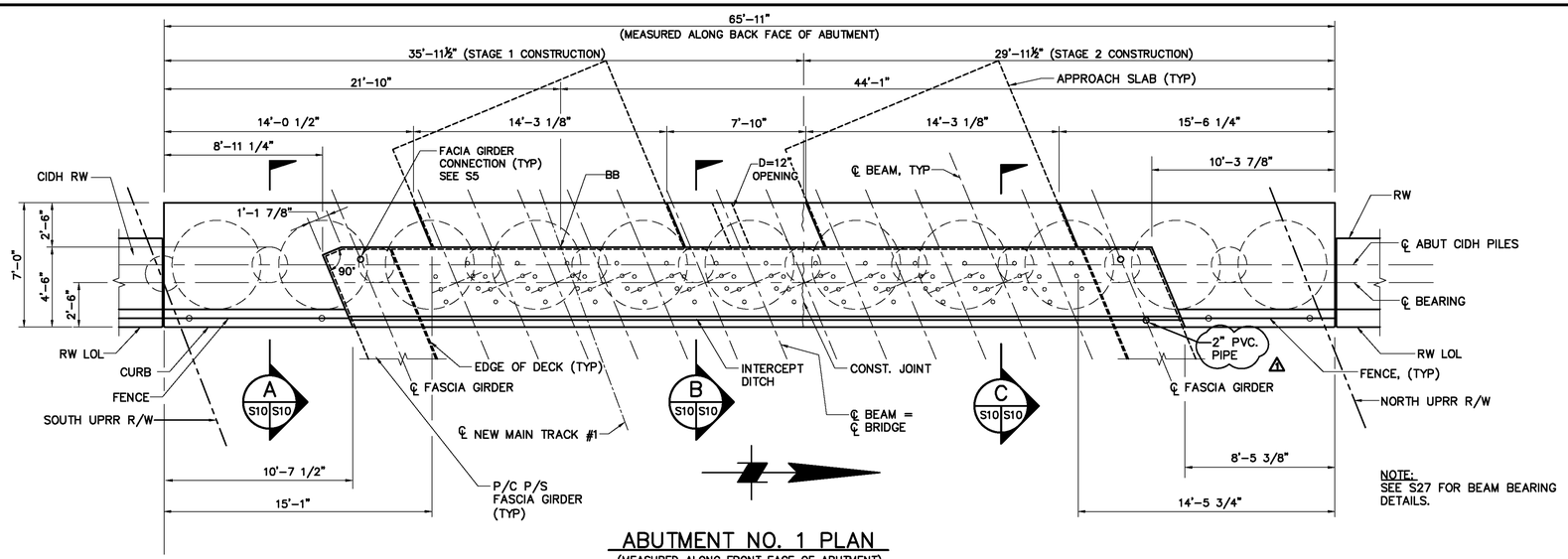

NOTE:
SEE S27 FOR BEAM BEARING DETAILS.

ABUTMENT NO. 1 PLAN
(MEASURED ALONG FRONT FACE OF ABUTMENT)
1/4"=1'-0"

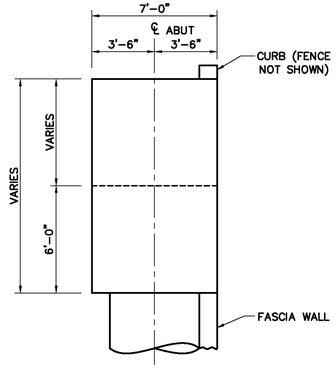

SECTION A
1/4"=1'-0"

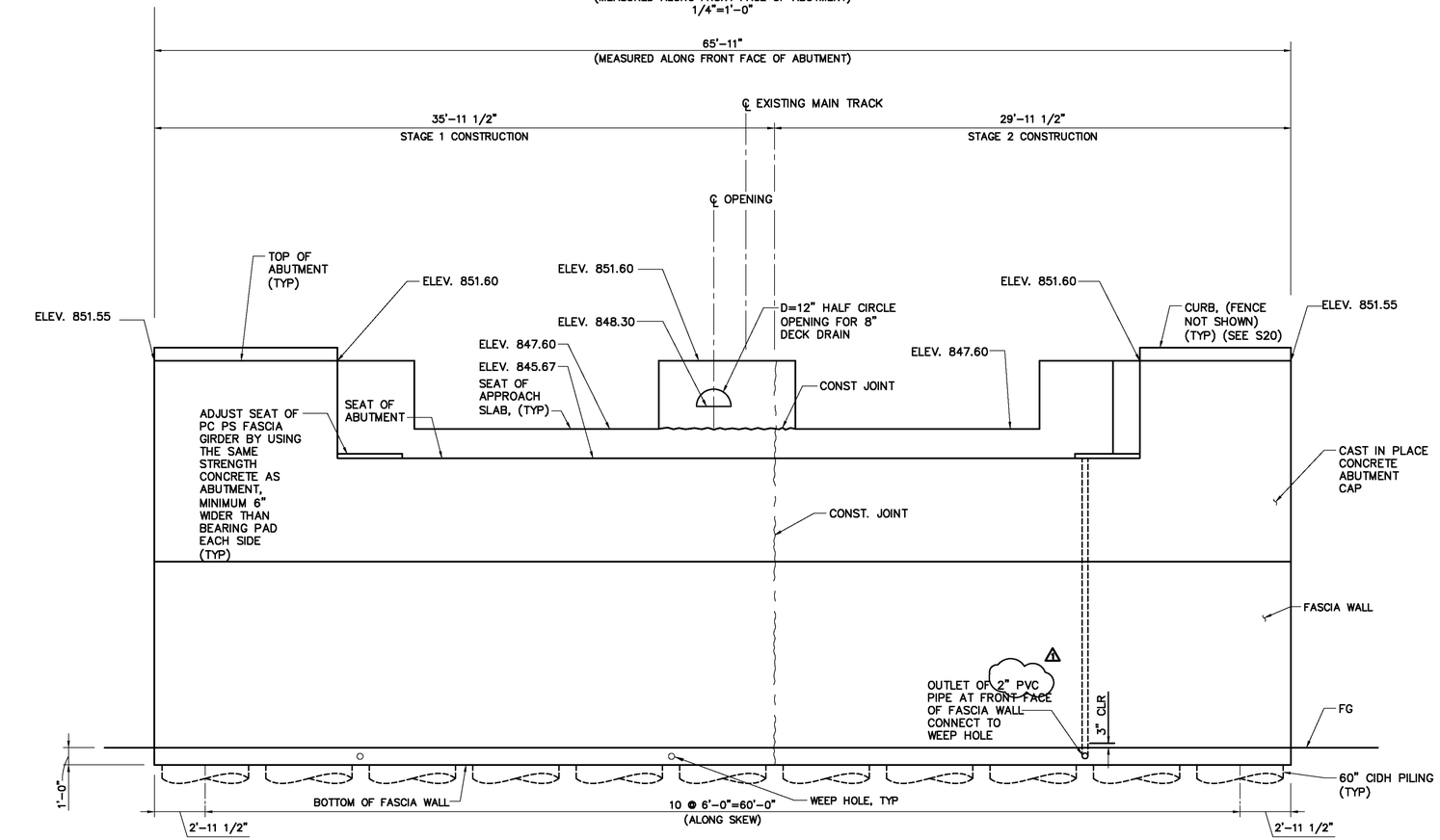

ABUTMENT NO. 1 ELEVATION
(LOOKING TRACK DOWNSTATION)
1/4"=1'-0"

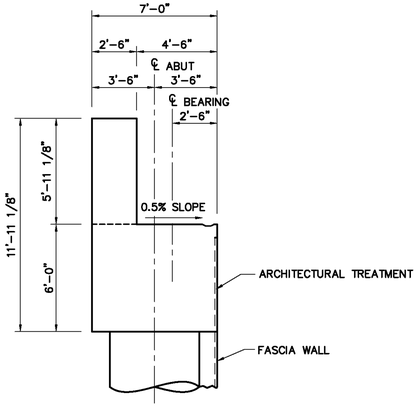

SECTION B
1/4"=1'-0"

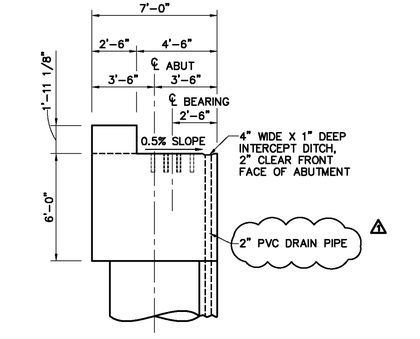

SECTION C
1/4"=1'-0"

ASBUILT
BID NO. 7185
COMPLETION DATE 03/25/2016
R.E. NAME BONAVENTURE EZEJI

4'-0" 0'-0" 4'-0" 8'-0"
SCALE: 1/4"=1'-0"

DIGALERT
DIAL TOLL FREE
1-800-422-4133
AT LEAST TWO DAYS BEFORE YOU DIG
UNDERGROUND SERVICE ALERT OF SOUTHERN CALIFORNIA

MOFFATT & NICHOL
3780 KILROY AIRPORT WAY, SUITE 600
LONG BEACH, CALIFORNIA, 90806
562-426-9551

DATE

REGISTERED PROFESSIONAL ENGINEER
YONG DENG
NO. C65629
EXP. 09/30/13
CIVIL
STATE OF CALIFORNIA

MARK	REVISIONS	APPR.	DATE
⚠	AS BUILT		

DESIGNED BY RW DRAWN BY TP CHECKED BY MSN

UPRR BRIDGE 55.54 LOS ANGELES SUB

CITY OF RIVERSIDE, CALIFORNIA
PUBLIC WORKS DEPARTMENT

RIVERSIDE AVE UNDERPASS

ABUTMENT NO. 1 FRAMING DETAILS

HORIZ. SCALE: AS SHOWN VERT. SCALE: AS SHOWN

STRUCTURE SHEET NO. S10
ACCT. NO. –
W.O. NO. –
R-4240
SHEET 96 OF 146
FILE NO.

DRAWING NAME: \\netapp1b02\lb_projects\8318_lb13\CADD\Sheet\STRUCTURE\635501S010.dwg
PLOT DATE: Sep 27, 2016 - 9:29am PLOTTED BY: dleigh

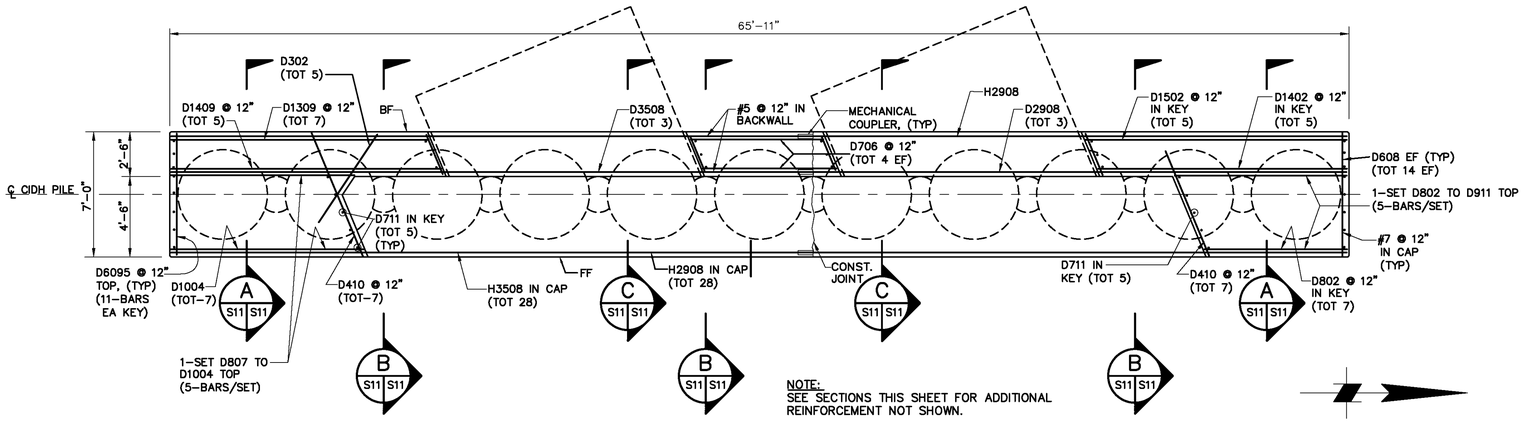

NOTE:
SEE SECTIONS THIS SHEET FOR ADDITIONAL REINFORCEMENT NOT SHOWN.

ABUT NO.1 REINFORCING PLAN

(LOOKING TRACK DOWNSTATION)
SCALE: 1/4"= 1'-0"

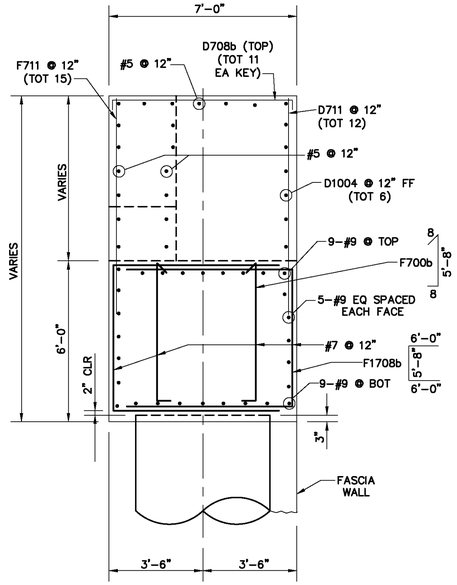

SECTION A

SCALE: 3/8"= 1'-0"

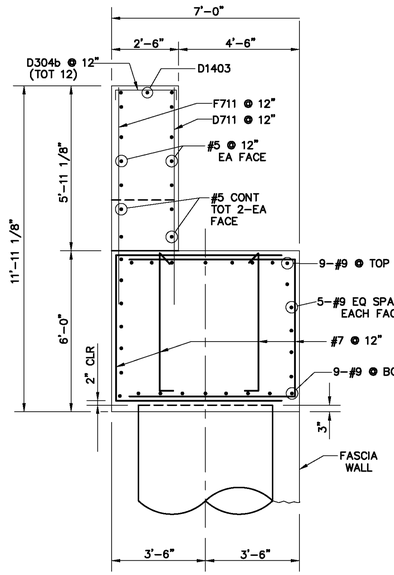

SECTION B

SCALE: 3/8"= 1'-0"

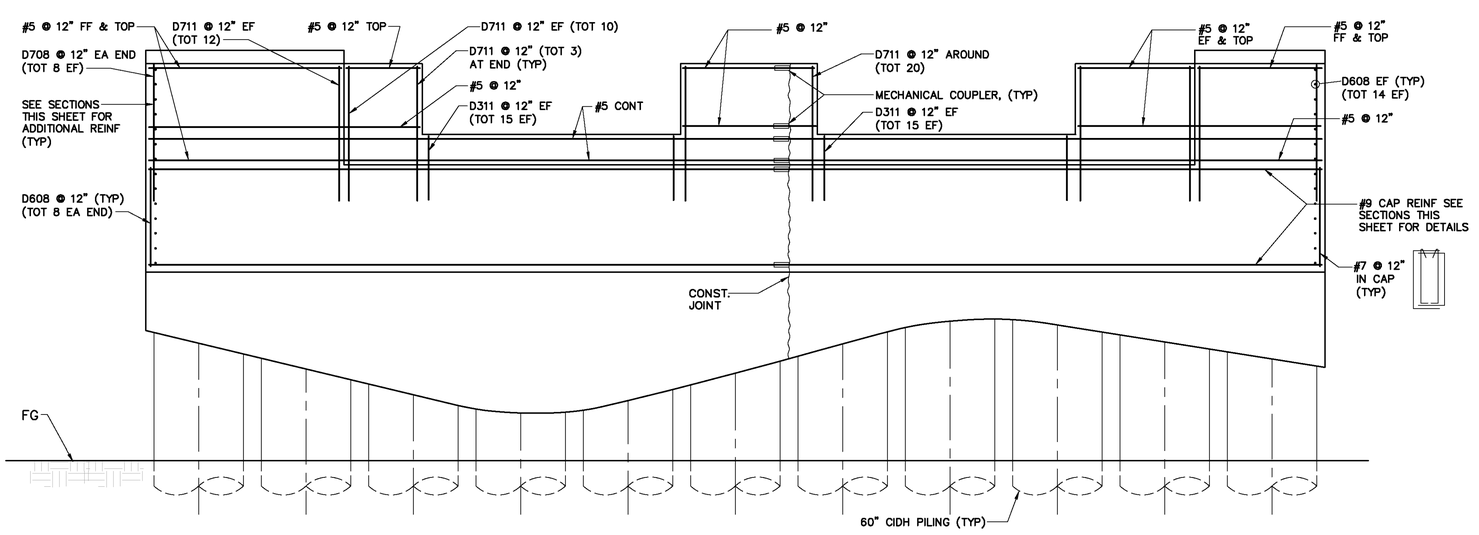

NOTE:
SEE SECTIONS THIS SHEET FOR ADDITIONAL REINFORCEMENT NOT SHOWN.

ABUT NO.1 REINFORCING ELEVATION

(LOOKING TRACK DOWNSTATION)
SCALE: 1/4"= 1'-0"

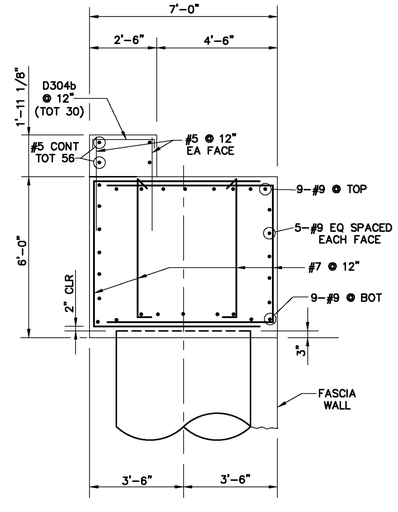

SECTION C

SCALE: 3/8"= 1'-0"

NOTES:

BF = BACK FACE

FF = FRONT FACE

EF = EACH FACE

EA = EACH

ASBUILT

BID NO. 7185

COMPLETION DATE 03/25/2016

R.E. NAME BONAVENTURE EZEJI

4'-0" 0'-0" 2'-0" 4'-0"
SCALE: 3/8"=1'-0"

4'-0" 0'-0" 4'-0" 8'-0"
SCALE: 1/4"=1'-0"

DIGALERT
DIAL TOLL FREE
1-800-422-4133
AT LEAST TWO DAYS BEFORE YOU DIG
UNDERGROUND SERVICE ALERT OF SOUTHERN CALIFORNIA

MOFFATT & NICHOL
3780 KILROY AIRPORT WAY, SUITE 600
LONG BEACH, CALIFORNIA, 90806
562-426-9551

DATE

REGISTERED PROFESSIONAL ENGINEER
YONG DENG
NO. C55629
EXP. 09/30/13
CIVIL
STATE OF CALIFORNIA

MARK	REVISIONS	APPR.	DATE

DESIGNED BY RW DRAWN BY TP CHECKED BY MSN

UPRR BRIDGE 55.54 LOS ANGELES SUB

CITY OF RIVERSIDE, CALIFORNIA
PUBLIC WORKS DEPARTMENT

RIVERSIDE AVE UNDERPASS

ABUTMENT NO.1 REINFORCING DETAILS

HORIZ. SCALE: AS SHOWN VERT. SCALE: AS SHOWN

STRUCTURE SHEET NO. S11

ACCT. NO. -
W.O. NO. -

R-4240

SHEET 97 OF 146

FILE NO.

DRAWING NAME: \\netapp1b02\lb_projects\838 lb13\CADD\Sheet\STRUCTURE\838501S011.dwg
PLOT DATE: Sep 27, 2016 - 9:29am PLOTTED BY: dleigh

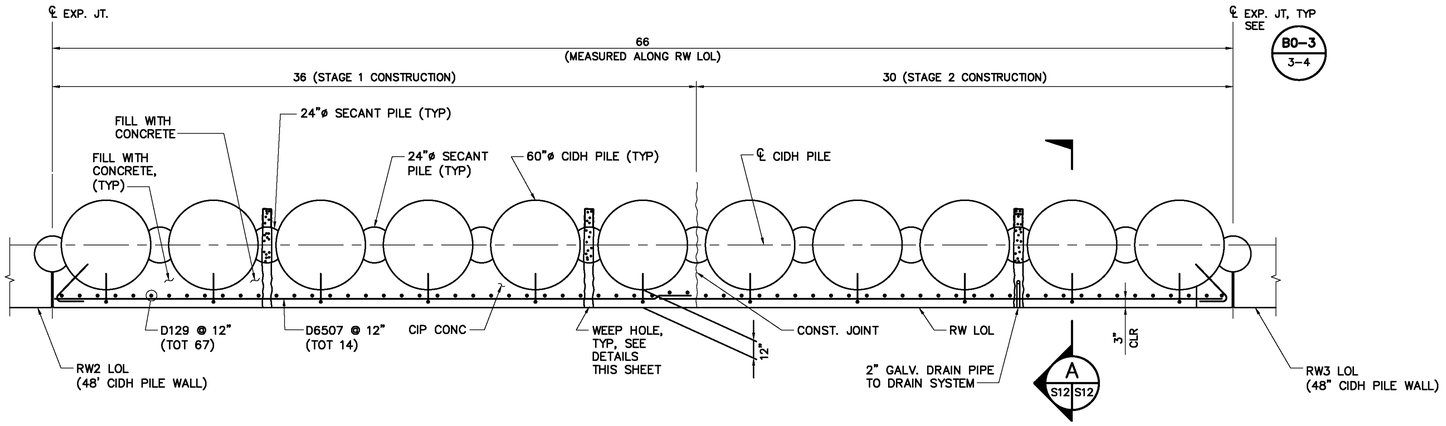

ABUTMENT NO. 1
FASCIA WALL REINFORCING PLAN
(LOOKING TRACK DOWNSTATION)
1/4"=1'-0"

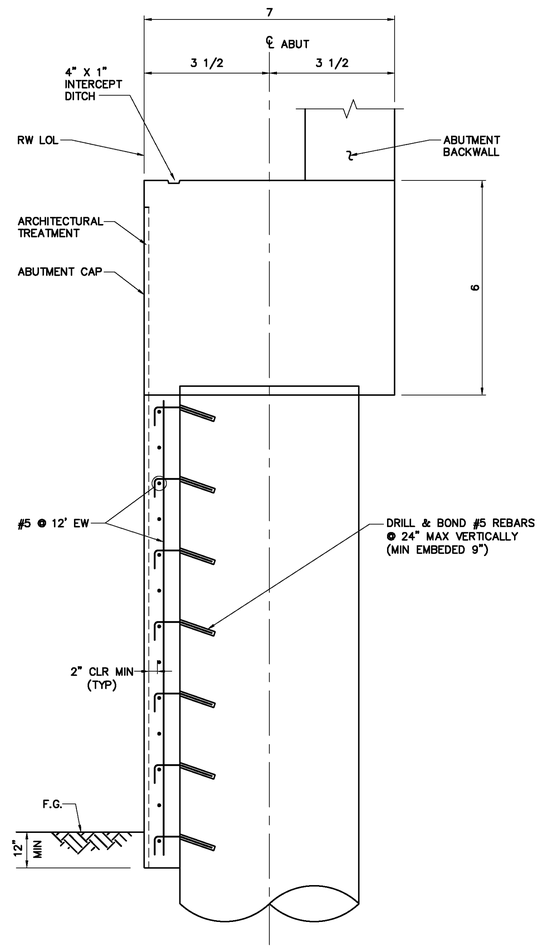

SECTION A
1/2"=1'-0"

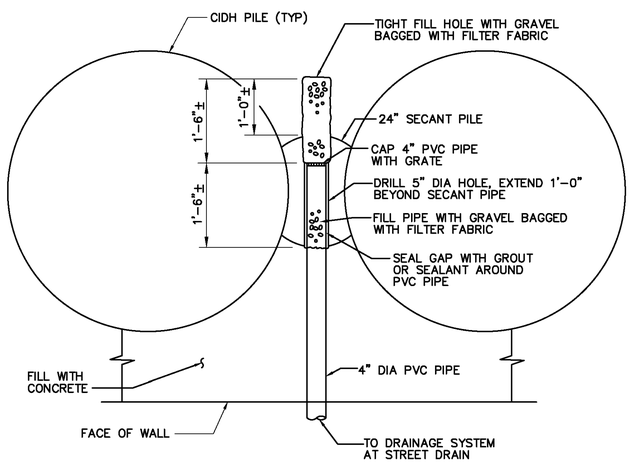

CIDH PILE WALL WEEP HOLE DETAIL
NO SCALE

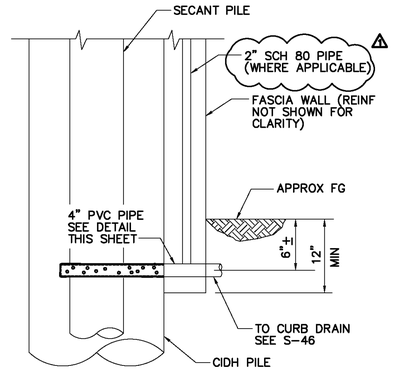

ABUTMENT DRAIN
NO SCALE

NOTE: SEE SHEET S48 FOR WEEP HOLE CONNECTION DETAIL TO CURB.

ASBUILT

BID NO. 7185

COMPLETION DATE 03/25/2016

R.E. NAME BONAVENTURE EZEJI

2'-0" 0'-0" 2'-0" 4'-0"
SCALE: 1/2"=1'-0"

4'-0" 0'-0" 4'-0" 8'-0"
SCALE: 1/4"=1'-0"

DIGALERT
DIAL TOLL FREE
1-800-422-4133
AT LEAST TWO DAYS BEFORE YOU DIG
UNDERGROUND SERVICE ALERT OF SOUTHERN CALIFORNIA

MOFFATT & NICHOL
3780 KILROY AIRPORT WAY, SUITE 600
LONG BEACH, CALIFORNIA, 90806
562-426-9551

DATE

REGISTERED PROFESSIONAL ENGINEER
YONG DENG
NO. C65629
EXP. 09/30/13
CIVIL
STATE OF CALIFORNIA

MARK	REVISIONS	APPR.	DATE
⚠	AS BUILT		

DESIGNED BY RW DRAWN BY TP CHECKED BY MSN

UPRR BRIDGE 55.54 LOS ANGELES SUB

CITY OF RIVERSIDE, CALIFORNIA
PUBLIC WORKS DEPARTMENT

RIVERSIDE AVE UNDERPASS

ABUTMENT NO. 1
FACIA WALL FRAMING AND REINFORCING DETAILS

HORIZ. SCALE: AS SHOWN VERT. SCALE: AS SHOWN

STRUCTURE SHEET NO. S12
ACCT. NO. -
W.O. NO. -
R-4240
SHEET 98 OF 146
FILE NO.

DRAWING NAME: \\netapp1b02\lb_projects\8318 lb13\CADD\Sheet\STRUCTURE\635501512d.dwg
PLOT DATE: Sep 27, 2016 - 9:29am PLOTTED BY: dlehgh

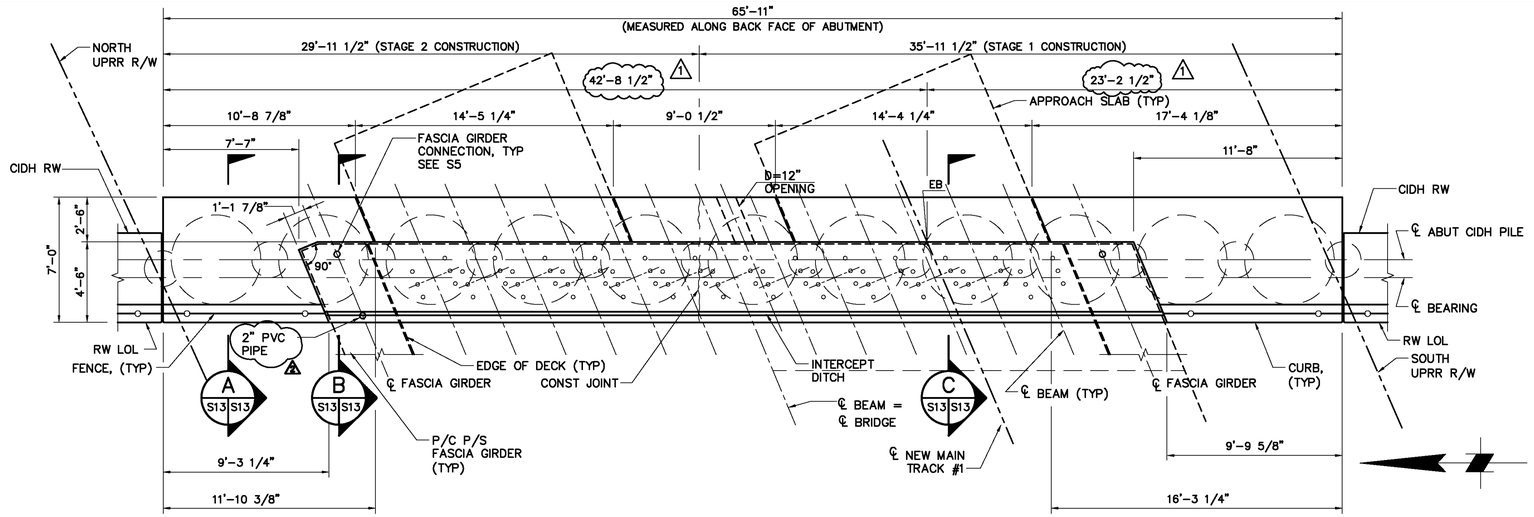

ABUTMENT NO. 3 PLAN

(MEASURED ALONG FRONT FACE OF ABUTMENT)
1/4"=1'-0"

NOTE:

SEE S27 FOR BEARING DETAILS.

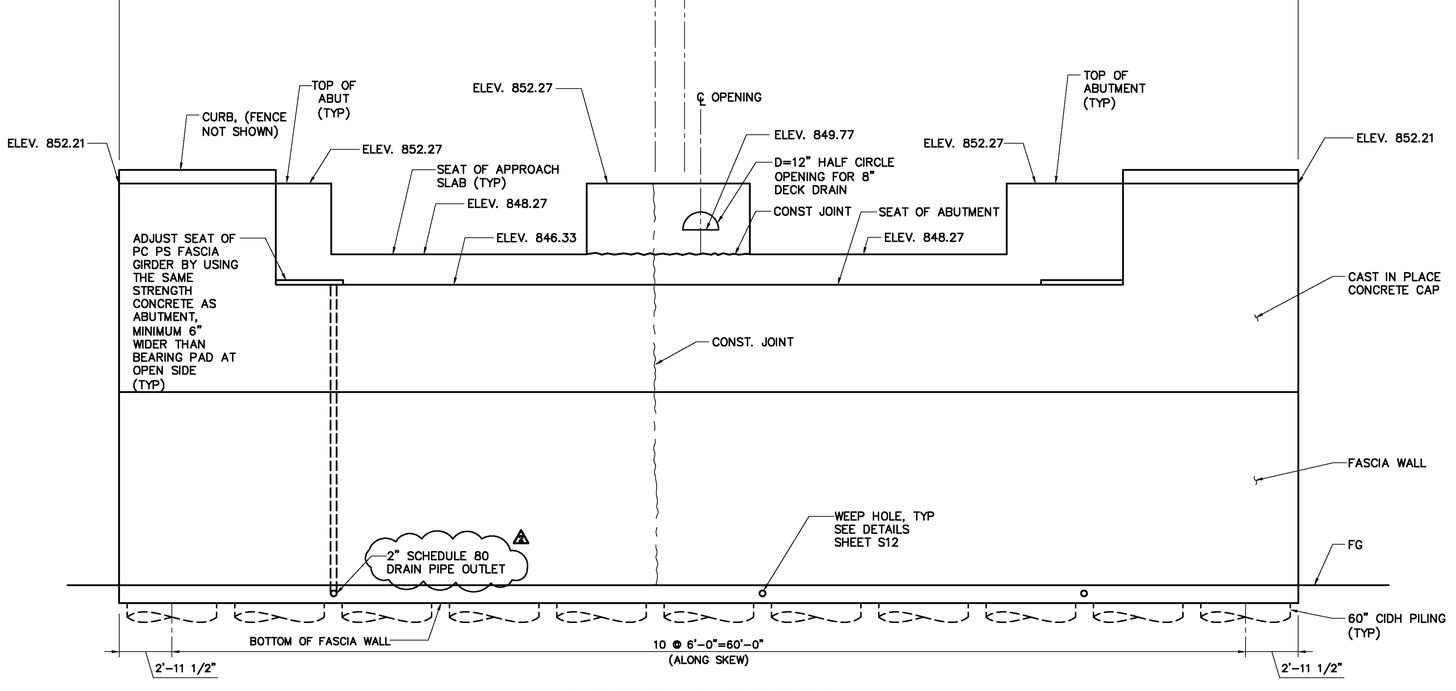

ABUTMENT NO. 3 ELEVATION

(LOOKING TRACK UPSTATION)
1/4"=1'-0"

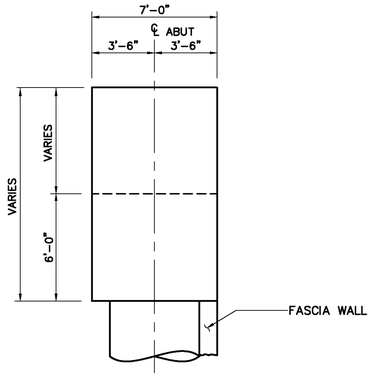

SECTION A (S13 S13)
1/4"=1'-0"

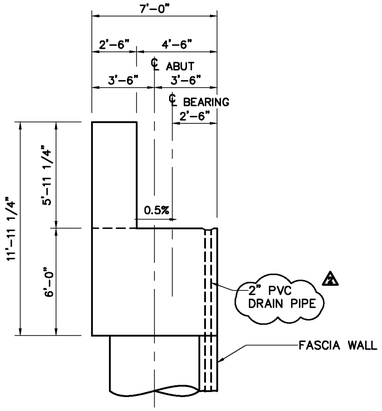

SECTION B (S13 S13)
1/4"=1'-0"

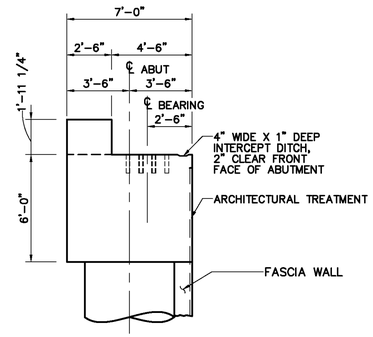

SECTION C (S13 S13)
1/4"=1'-0"

ASBUILT

BID NO. 7185
COMPLETION DATE 03/25/2016
R.E. NAME BONAVENTURE EZEJI

4'-0" 0'-0" 4'-0" 8'-0"
SCALE: 1/4"=1'-0"

DIGALERT
DIAL TOLL FREE
1-800-422-4133
AT LEAST TWO DAYS BEFORE YOU DIG
UNDERGROUND SERVICE ALERT OF SOUTHERN CALIFORNIA

MOFFATT & NICHOL
3780 KILROY AIRPORT WAY, SUITE 600
LONG BEACH, CALIFORNIA, 90806
562-426-9551

DATE _____

REGISTERED PROFESSIONAL ENGINEER
YONG DENG
NO. C65629
EXP. 09/30/13
CIVIL
STATE OF CALIFORNIA

MARK	REVISIONS	APPR.	DATE
2	AS BUILT		
1	REVISE REF. DIMENSIONS	YD	1/13/14

DESIGNED BY RW DRAWN BY TP CHECKED BY MSN

UPRR BRIDGE 55.54 LOS ANGELES SUB

CITY OF RIVERSIDE, CALIFORNIA
PUBLIC WORKS DEPARTMENT

RIVERSIDE AVE UNDERPASS

ABUTMENT NO. 3 FRAMING DETAILS

HORIZ. SCALE: AS SHOWN VERT. SCALE: AS SHOWN

STRUCTURE SHEET NO. S13
ACCT. NO. -
W.O. NO. -
R-4240
SHEET 99 OF 146
FILE NO.

DRAWING NAME: \\retopplb02\lb_projects\&318 lb13\CADD\Sheet\STRUCTURE\635501S013.dwg
PLOT DATE: Sep 27, 2016 - 9:29am PLOTTED BY: dengh

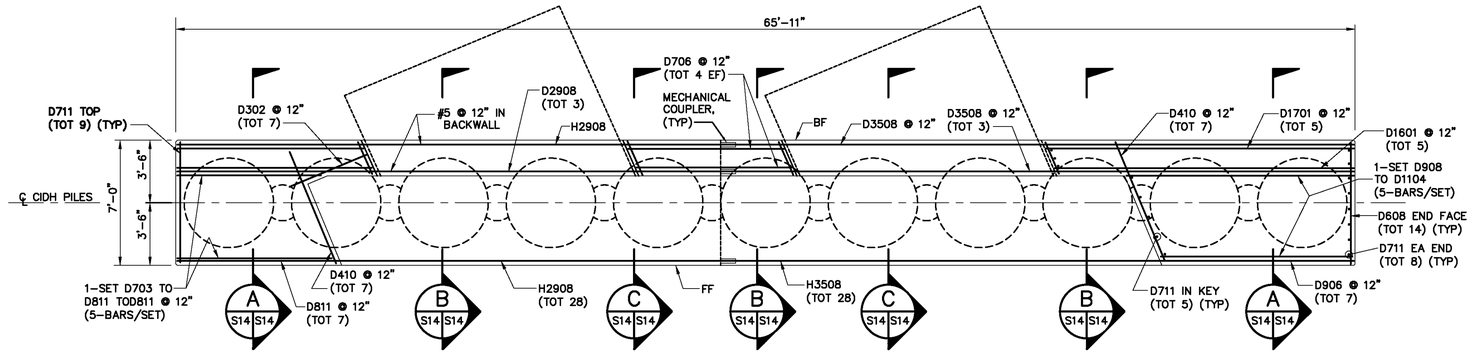

ABUT NO.3 REINFORCING PLAN

(LOOKING TRACK UPSTATION)
SCALE: 1/4"= 1'-0"

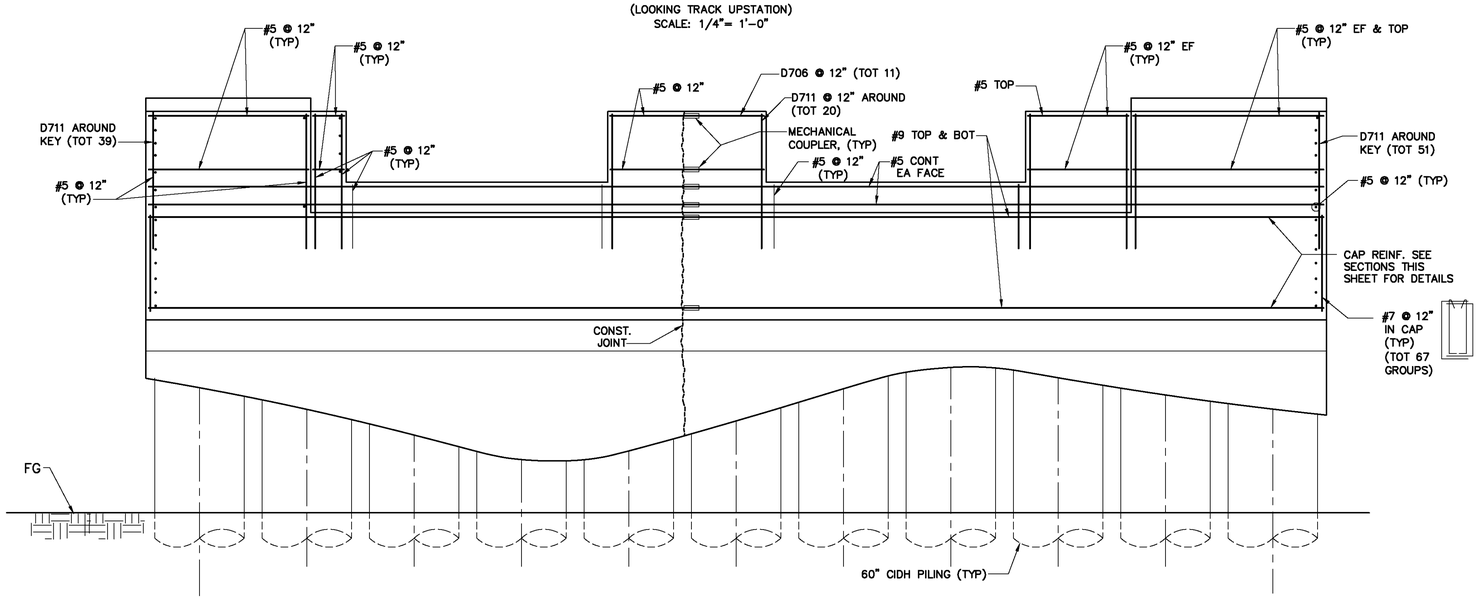

ABUT NO.3 REINFORCING ELEVATION

(LOOKING TRACK DOWNSTATION)
SCALE: 1/4"= 1'-0"

NOTE:
SEE SECTIONS THIS SHEET FOR ADDITIONAL REINFORCEMENT NOT SHOWN.

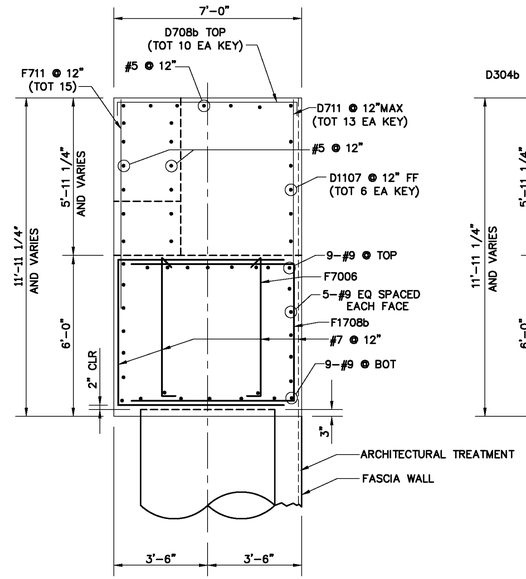

SECTION A (A, S14 S14)
SCALE: 3/8"= 1'-0"

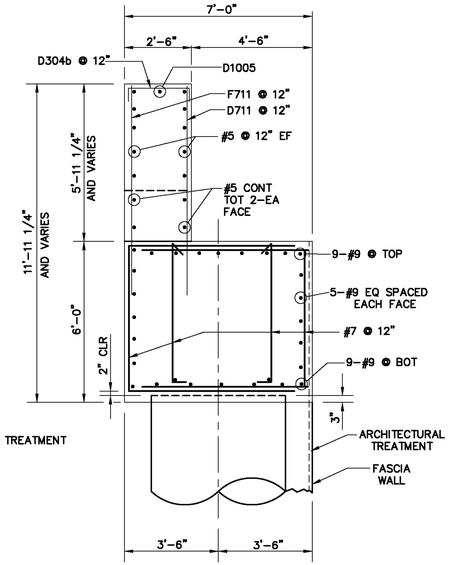

SECTION A (B, S14 S14)
SCALE: 3/8"= 1'-0"

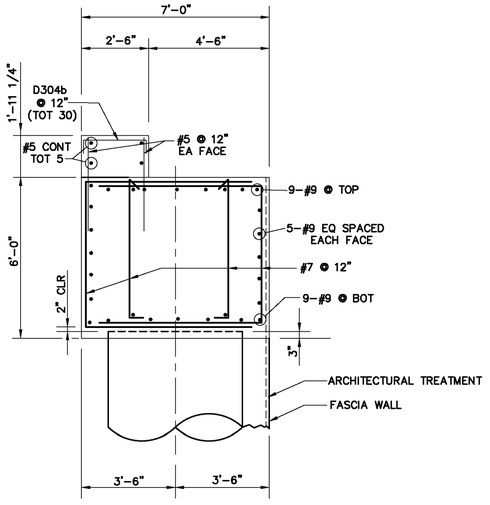

SECTION A (C, S14 S14)
SCALE: 3/8"= 1'-0"

ASBUILT

BID NO. 7185
COMPLETION DATE 03/25/2016
R.E. NAME BONAVENTURE EZEJI

4'-0" 0'-0" 2'-0" 4'-0"
SCALE: 3/8"=1'-0"

4'-0" 0'-0" 4'-0" 8'-0"
SCALE: 1/4"=1'-0"

DIGALERT
DIAL TOLL FREE
1-800-422-4133
AT LEAST TWO DAYS BEFORE YOU DIG
UNDERGROUND SERVICE ALERT OF SOUTHERN CALIFORNIA

MOFFATT & NICHOL
3780 KILROY AIRPORT WAY, SUITE 600
LONG BEACH, CALIFORNIA, 90806
562-426-9551

DATE

REGISTERED PROFESSIONAL ENGINEER
YONG DENG
NO. C65629
EXP. 09/30/13
CIVIL
STATE OF CALIFORNIA

MARK	REVISIONS	APPR.	DATE

DESIGNED BY RW DRAWN BY TP CHECKED BY MSN

UPRR BRIDGE 55.54 LOS ANGELES SUB

CITY OF RIVERSIDE, CALIFORNIA
PUBLIC WORKS DEPARTMENT

RIVERSIDE AVE UNDERPASS

ABUTMENT NO.3 REINFORCING DETAILS

HORIZ. SCALE: AS SHOWN VERT. SCALE: AS SHOWN

STRUCTURE SHEET NO. S14
ACCT. NO. -
W.O. NO. -
R-4240
SHEET 100 OF 146
FILE NO.

DRAWING NAME: \\netapp1b02\ib_projects\831B_ib13\CADD\Sheet\STRUCTURE\633501S014.dwg
PLOT DATE: Sep 27, 2016 - 9:29am PLOTTED BY: dleigh

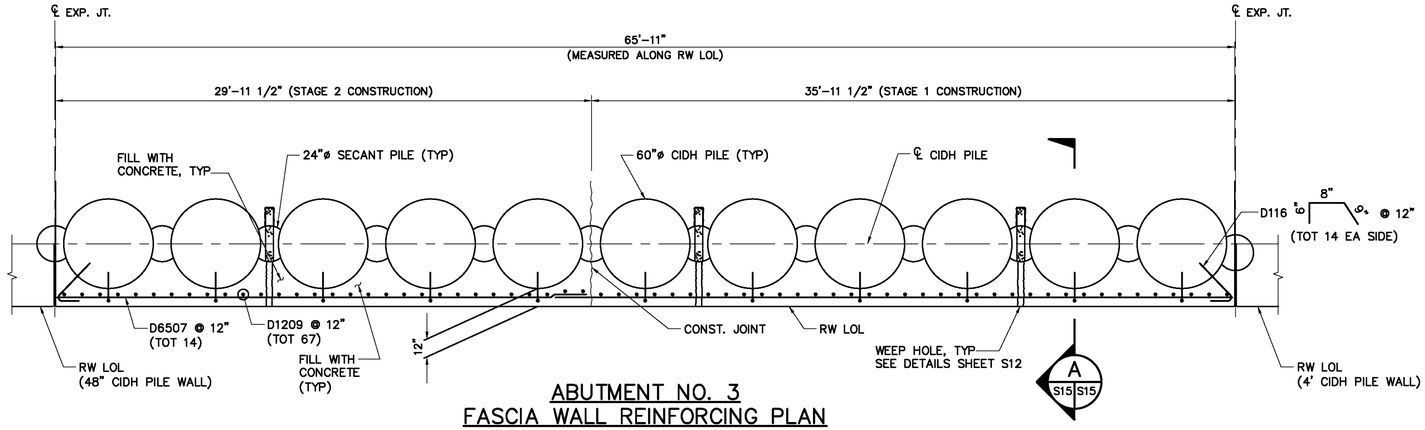

ABUTMENT NO. 3
FASCIA WALL REINFORCING PLAN
(LOOKING TRACK UPSTATION)
1/4"=1'-0"

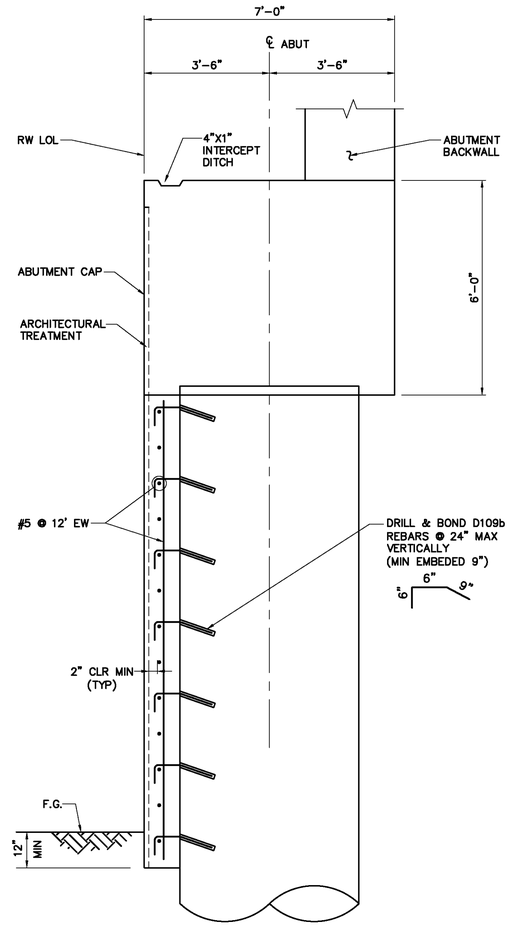

SECTION A
1/2"=1'-0"

ASBUILT

BID NO. 7185

COMPLETION DATE 03/25/2016

R.E. NAME BONAVENTURE EZEJI

2'-0" 0'-0" 2'-0" 4'-0"
SCALE: 1/2"=1'-0"

4'-0" 0'-0" 4'-0" 8'-0"
SCALE: 1/4"=1'-0"

DIGALERT
DIAL TOLL FREE
1-800-422-4133
AT LEAST TWO DAYS BEFORE YOU DIG
UNDERGROUND SERVICE ALERT OF SOUTHERN CALIFORNIA

MOFFATT & NICHOL
3780 KILROY AIRPORT WAY, SUITE 600
LONG BEACH, CALIFORNIA, 90806
562-426-9551

DATE

REGISTERED PROFESSIONAL ENGINEER
YONG DENG
NO. C65629
EXP. 09/30/13
CIVIL
STATE OF CALIFORNIA

MARK	REVISIONS	APPR.	DATE

DESIGNED BY RW DRAWN BY TP CHECKED BY MSN

UPRR BRIDGE 55.54 LOS ANGELES SUB

CITY OF RIVERSIDE, CALIFORNIA
PUBLIC WORKS DEPARTMENT

RIVERSIDE AVE UNDERPASS

ABUTMENT NO. 3
FACIA WALL FRAMING AND REINFORCING DETAILS

HORIZ. SCALE: AS SHOWN VERT. SCALE: AS SHOWN

STRUCTURE SHEET NO. S15

ACCT. NO. -
W.O. NO. -

R-4240

SHEET 101 OF 146

FILE NO.

DRAWING NAME: \\netapp1b02\lb_projects\8318 lb13\CADD\Sheet\STRUCTURE\63550 S015.dwg
PLOT DATE: Sep 27, 2016 - 8:29am PLOTTED BY: dleigh

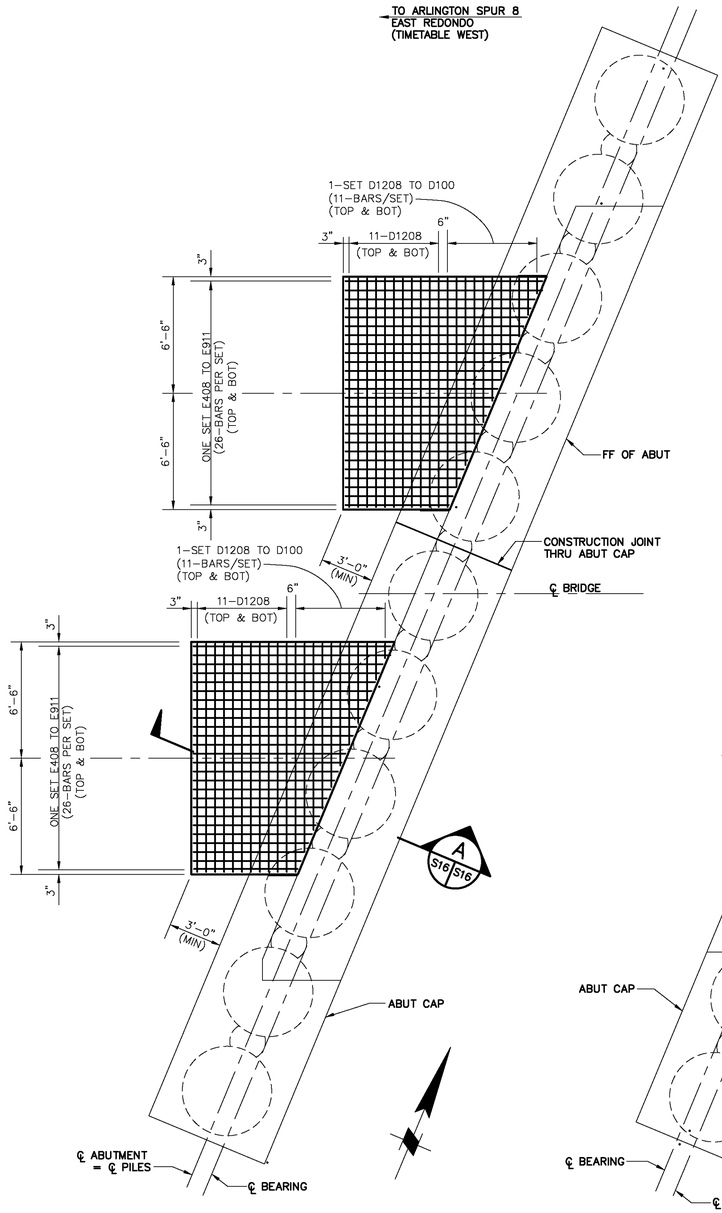

PLAN AT ABUT NO. 1 APPROACH SLAB
SCALE: 1/4"= 1'-0"

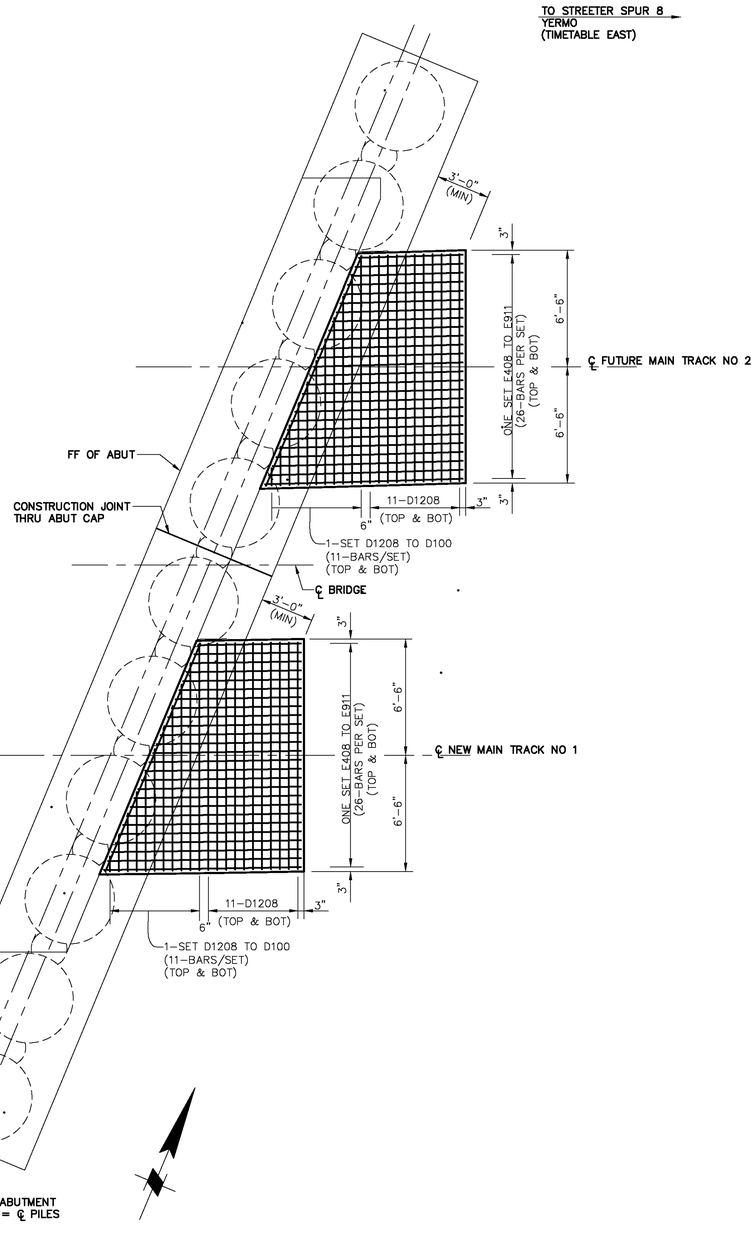

PLAN AT ABUT NO. 3 APPROACH SLAB
SCALE: 1/4"= 1'-0"

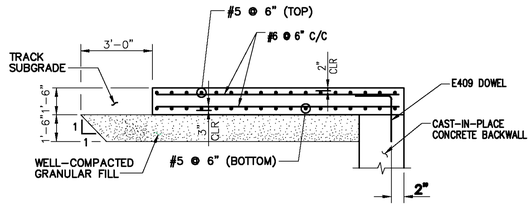

APPROACH SLAB TYPICAL SECTION
SCALE: 1/4"= 1'-0"
A
S16 S16

NOTES:

1. FOR CONCRETE NOTES, SEE SHEET S2.
2. REINFORCING STEEL IN ABUTMENT NOT SHOWN.
3. PROVIDE WELL-COMPACTED GRANULAR FILL UNDER APPROACH SLAB PER SPECIFICATIONS.
4. MATCH TOP OF APPROACH SLAB TO TOP OF STEEL DECK. SLOPE TOP OF SLAB UNIFORMLY ALONG ℄ TRACK TO MATCH STEEL DECK.

ASBUILT

BID NO. 7185
COMPLETION DATE 03/25/2016
R.E. NAME BONAVENTURE EZEJI

4'-0" 0'-0" 4'-0" 8'-0"
SCALE: 1/4"=1'-0"

DIGALERT
DIAL TOLL FREE
1-800-422-4133
AT LEAST TWO DAYS BEFORE YOU DIG
UNDERGROUND SERVICE ALERT OF SOUTHERN CALIFORNIA

MOFFATT & NICHOL
3780 KILROY AIRPORT WAY, SUITE 600
LONG BEACH, CALIFORNIA, 90806
562-426-9551

DATE _____

REGISTERED PROFESSIONAL ENGINEER
YONG DENG
NO. C65629
EXP. 09/30/13
CIVIL
STATE OF CALIFORNIA

MARK	REVISIONS	APPR.	DATE

DESIGNED BY RW DRAWN BY TP CHECKED BY MSN

UPRR BRIDGE 55.54 LOS ANGELES SUB

CITY OF RIVERSIDE, CALIFORNIA
PUBLIC WORKS DEPARTMENT

RIVERSIDE AVE UNDERPASS

APPROACH SLAB FRAMING
AND REINFORCING DETAILS

HORIZ. SCALE: AS SHOWN VERT. SCALE: AS SHOWN

STRUCTURE SHEET NO. S16
ACCT. NO. -
W.O. NO. -
R-4240
SHEET 102 OF 146
FILE NO.

DRAWING NAME: \\ntoppb02\lb_projects\8318_lb13\CADD\Sheet\STRUCTURE\635501S016.dwg
PLOT DATE: Sep 27, 2016 - 9:30am PLOTTED BY: dleigh

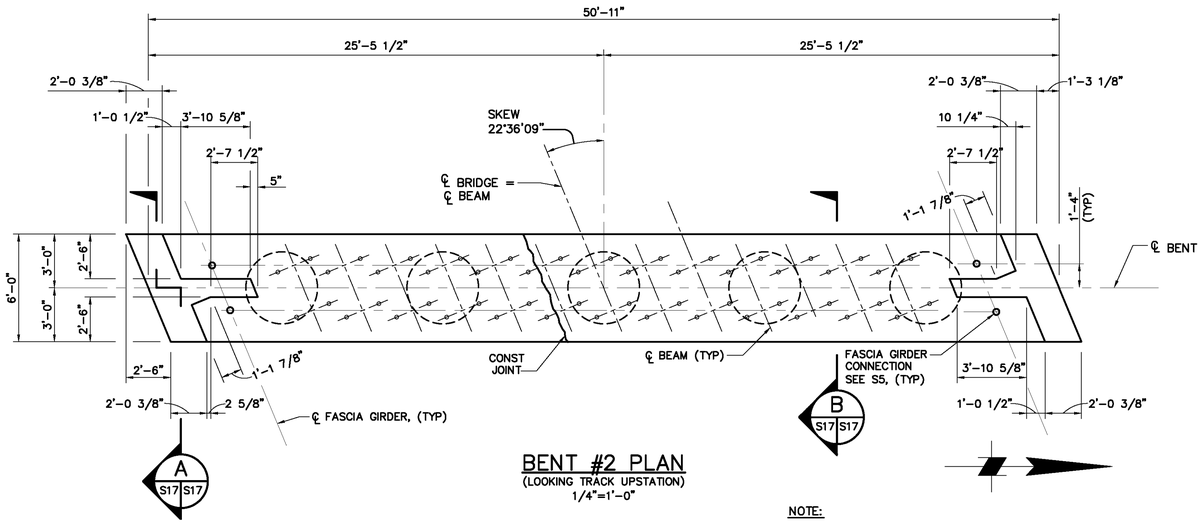

BENT #2 PLAN
(LOOKING TRACK UPSTATION)
1/4"=1'-0"

NOTE:

SEE S27 FOR BEARING DETAILS.

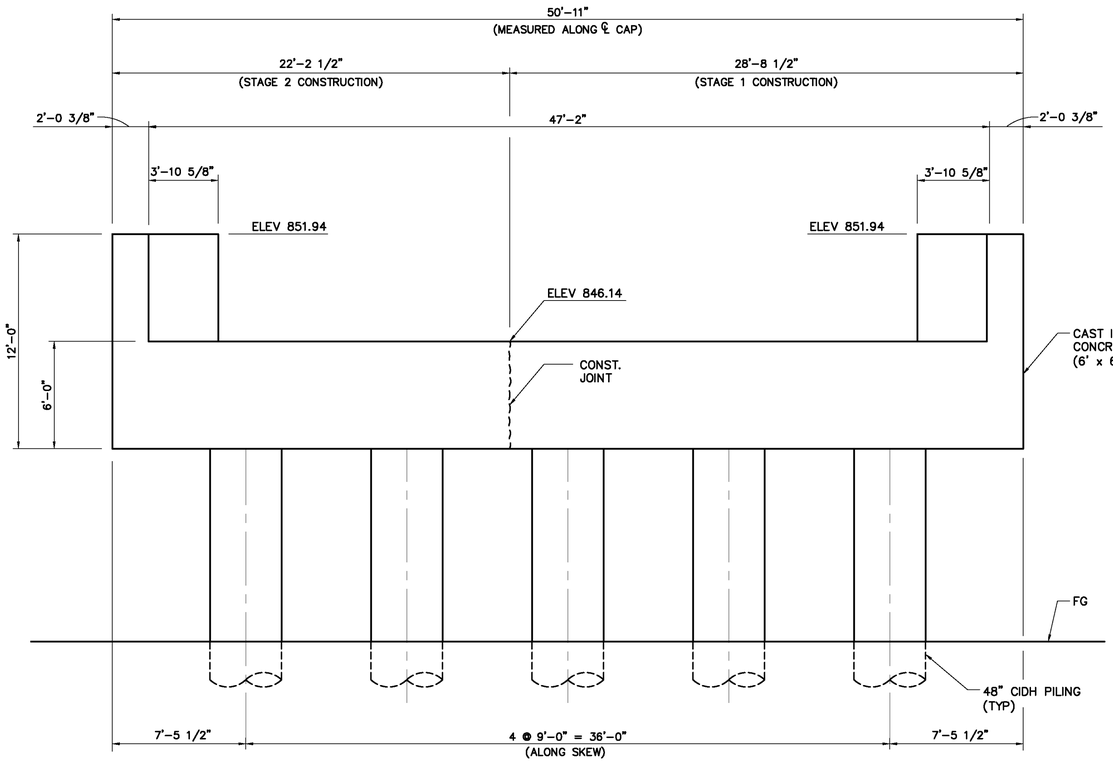

BENT #2 ELEVATION
(LOOKING TRACK UPSTATION)
1/4"=1'-0"

COLUMNS CONSTRUCTED OFF CENTER.
AESTHETIC COVER ADDED.
FOR DETAILS, SEE NEXT SHEET.

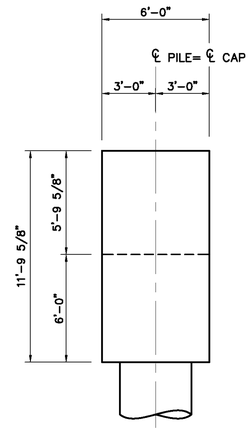

SECTION A
1/4"=1'-0"

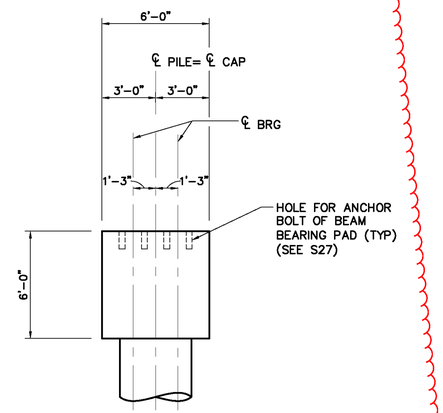

SECTION B
1/4"=1'-0"

ASBUILT

BID NO. 7185

COMPLETION DATE 03/25/2016

R.E. NAME BONAVENTURE EZEJI

4'-0" 0'-0" 4'-0" 8'-0"

SCALE: 1/4"=1'-0"

DIGALERT
DIAL TOLL FREE
1-800-422-4133
AT LEAST TWO DAYS BEFORE YOU DIG
UNDERGROUND SERVICE ALERT OF SOUTHERN CALIFORNIA

MOFFATT & NICHOL
3780 KILROY AIRPORT WAY, SUITE 600
LONG BEACH, CALIFORNIA, 90806
562-426-9551

DATE _____

REGISTERED PROFESSIONAL ENGINEER
YONG DENG
NO. C65629
EXP. 09/30/13
CIVIL
STATE OF CALIFORNIA

MARK	REVISIONS	APPR.	DATE

DESIGNED BY RW DRAWN BY TP CHECKED BY MSN

UPRR BRIDGE 55.54 LOS ANGELES SUB

CITY OF RIVERSIDE, CALIFORNIA
PUBLIC WORKS DEPARTMENT

RIVERSIDE AVE UNDERPASS

BENT NO. 2 FRAMING DETAILS

HORIZ. SCALE: AS SHOWN VERT. SCALE: AS SHOWN

STRUCTURE SHEET NO. S17

ACCT. NO. -
W.O. NO. -

R-4240

SHEET 103 OF 146

FILE NO.

DRAWING NAME: \\retroplot02\b_projects\8318 its13\CADD\Sheet\STRUCTURE\635015017.dwg
PLOT DATE: Sep 27, 2016 - 9:50am PLOTTED BY: dleigh

Option 1: New 5.5' Dia. Concrete Column

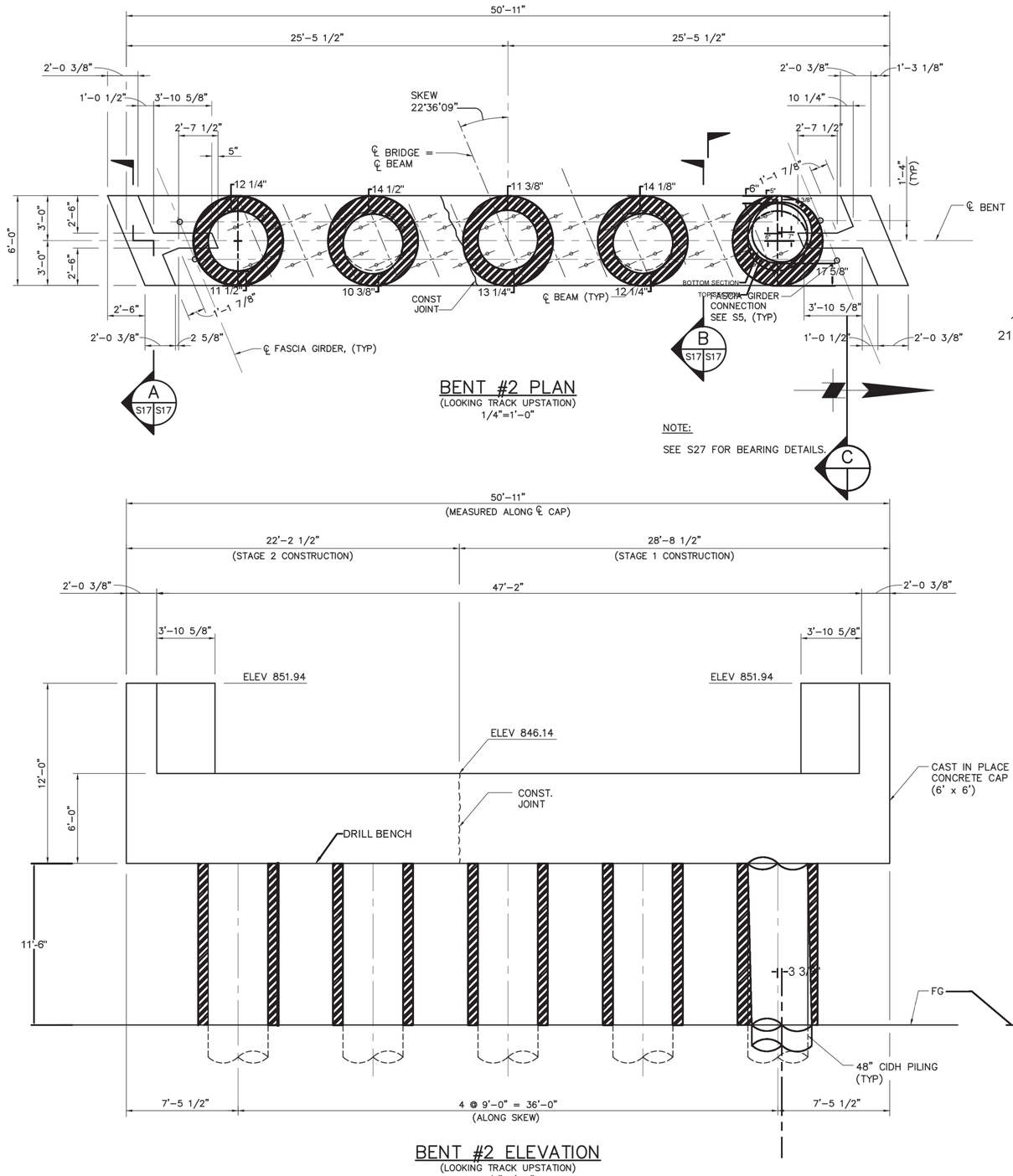

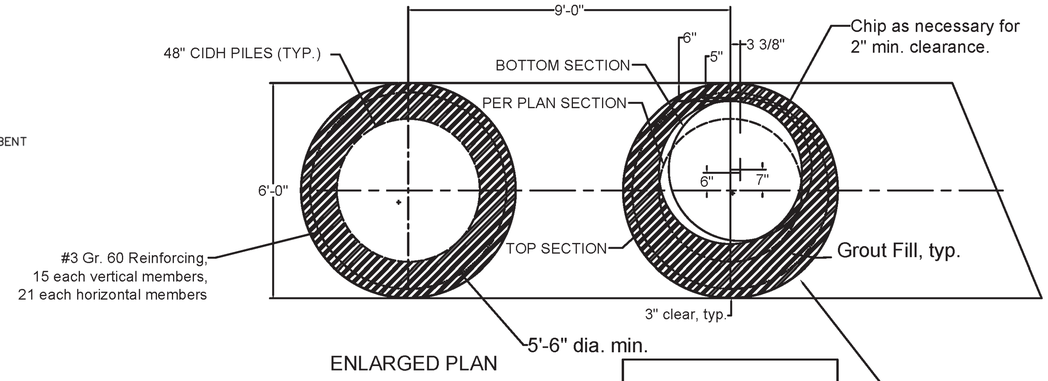

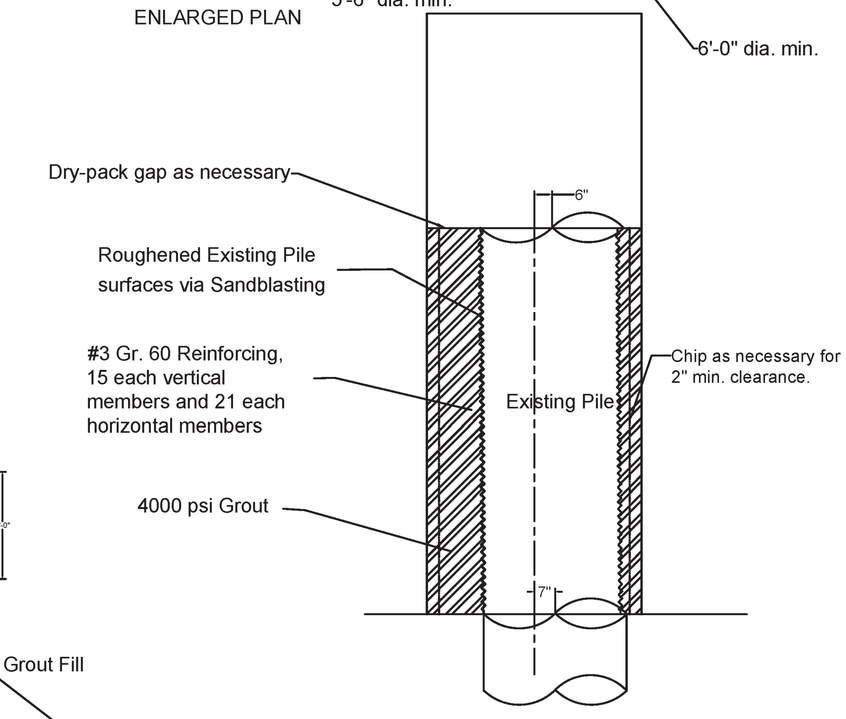

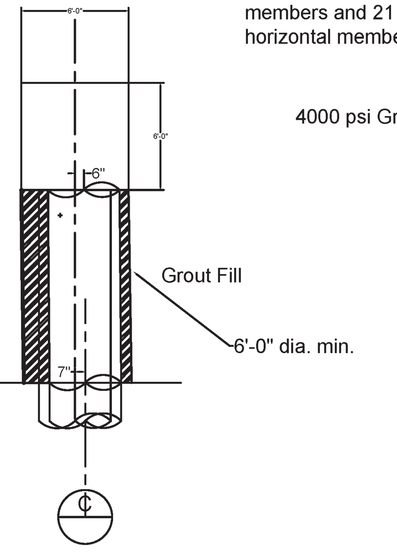

ASBUILT

BID NO. 7185

COMPLETION DATE 03/25/2016

R.E. NAME BONAVENTURE EZEJI

DIGALERT
DIAL TOLL FREE
1-800-422-4133
AT LEAST TWO DAYS BEFORE YOU DIG
UNDERGROUND SERVICE ALERT OF SOUTHERN CALIFORNIA

MOFFATT & NICHOL
3780 KILROY AIRPORT WAY, SUITE 600
LONG BEACH, CALIFORNIA, 90806
562-426-9551

DATE

REGISTERED PROFESSIONAL ENGINEER
YONG DENG
NO. C65629
EXP. 09/30/13
CIVIL
STATE OF CALIFORNIA

MARK	REVISIONS	APPR.	DATE

DESIGNED BY RW DRAWN BY TP CHECKED BY MSN

UPRR BRIDGE 55.54 LOS ANGELES SUB

CITY OF RIVERSIDE, CALIFORNIA
PUBLIC WORKS DEPARTMENT

RIVERSIDE AVE UNDERPASS

BENT NO. 2 FRAMING DETAILS

HORIZ. SCALE: AS SHOWN VERT. SCALE: AS SHOWN

STRUCTURE SHEET NO. S17

ACCT. NO. -
W.O. NO. -

R-4240

SHEET 103 OF 146

FILE NO.

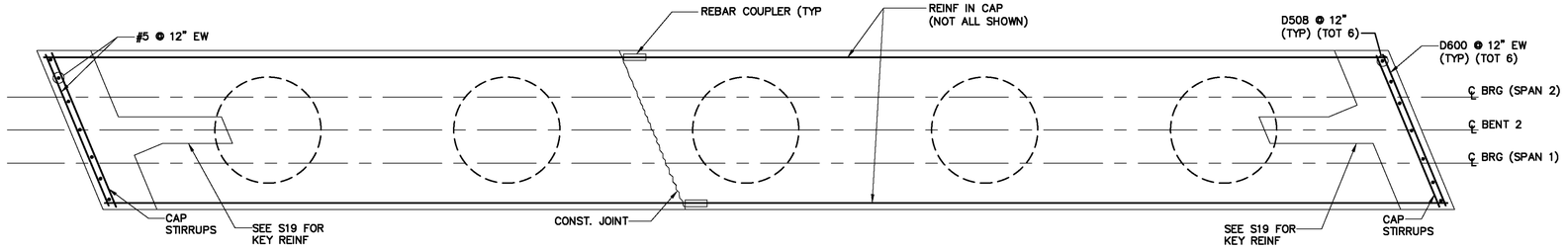

BENT 2 REINFORCING PLAN

(LOOKING TRACK UPSTATION)
SCALE: 3/8"= 1'-0"

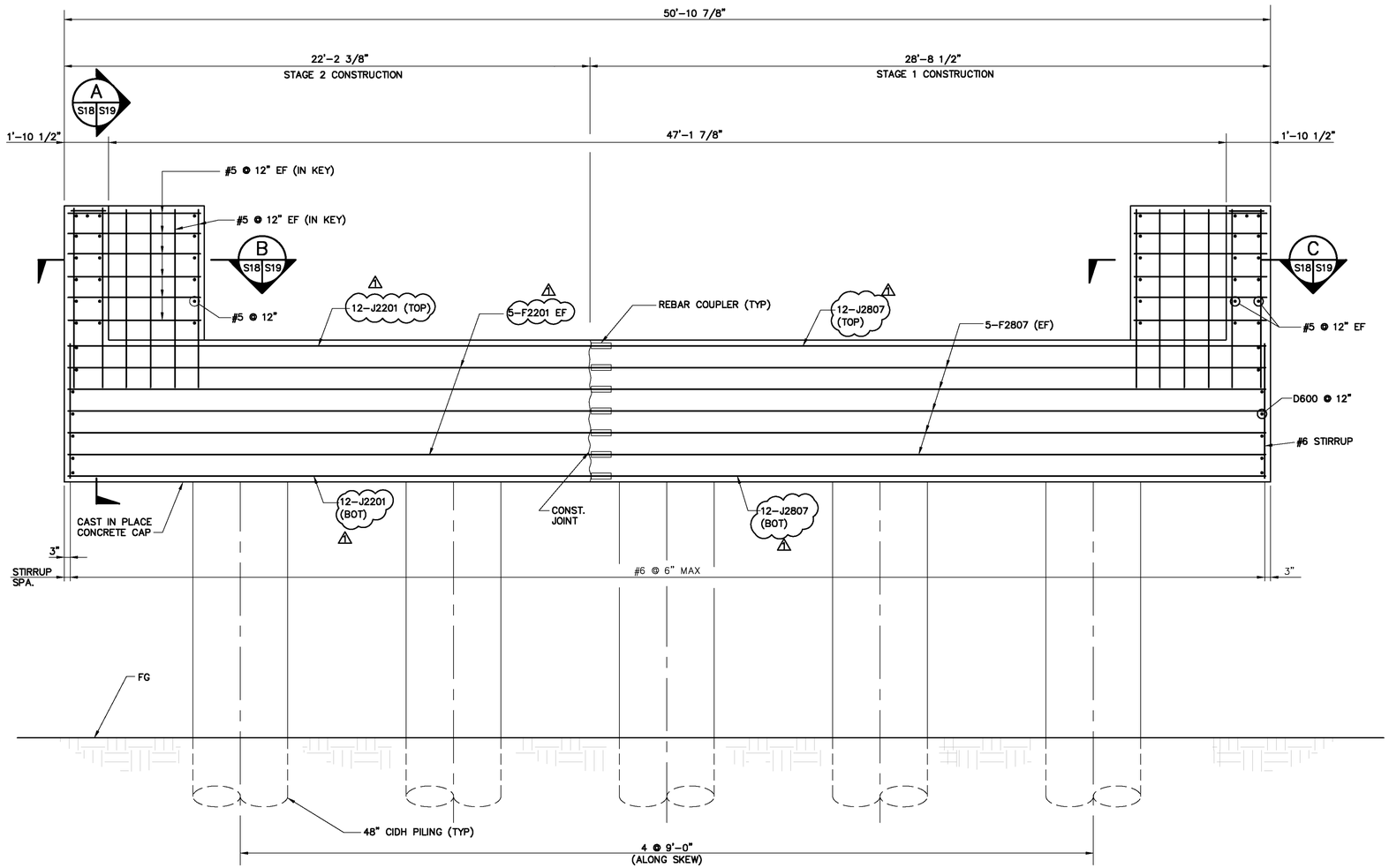

BENT 2 REINFORCING ELEVATION

(LOOKING TRACK UPSTATION)
SCALE: 3/8"= 1'-0"

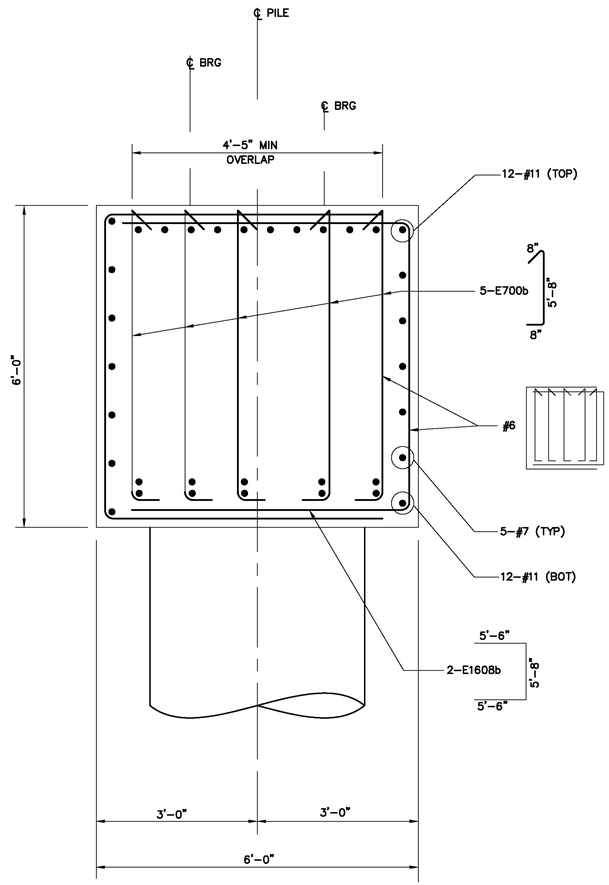

TYPICAL BENT CAP SECTION

SCALE: 3/4"= 1'-0"

ASBUILT

BID NO. 7185
COMPLETION DATE 03/25/2016
R.E. NAME BONAVENTURE EZEJI

2'-0" 0'-0" 1'-0" 2'-0"
SCALE: 3/4"=1'-0"

4'-0" 0'-0" 2'-0" 4'-0"
SCALE: 3/8"=1'-0"

DIGALERT
DIAL TOLL FREE
1-800-422-4133
AT LEAST TWO DAYS BEFORE YOU DIG
UNDERGROUND SERVICE ALERT OF SOUTHERN CALIFORNIA

MOFFATT & NICHOL
3780 KILROY AIRPORT WAY, SUITE 600
LONG BEACH, CALIFORNIA, 90806
562-426-9551

DATE

REGISTERED PROFESSIONAL ENGINEER
YONG DENG
NO. C65629
EXP. 09/30/13
CIVIL
STATE OF CALIFORNIA

MARK	REVISIONS	APPR.	DATE
1	REVISED BENT REBAR	YD	10/22/13

DESIGNED BY RW DRAWN BY TP CHECKED BY MSN

UPRR BRIDGE 55.54 LOS ANGELES SUB

CITY OF RIVERSIDE, CALIFORNIA
PUBLIC WORKS DEPARTMENT

RIVERSIDE AVE UNDERPASS

BENT NO.2 REINFORCING DETAILS (1 OF 2)

HORIZ. SCALE: AS SHOWN VERT. SCALE: AS SHOWN

STRUCTURE SHEET NO. S18
ACCT. NO. -
W.O. NO. -
R-4240
SHEET 104 OF 146
FILE NO.

DRAWING NAME: \\netapp1b02\lb_projects\8318 lb13\CADD\Sheet\STRUCTURE\83550150118_Addendum1.dwg
PLOT DATE: Sep 27, 2016 - 9:36am PLOTTED BY: dhegh

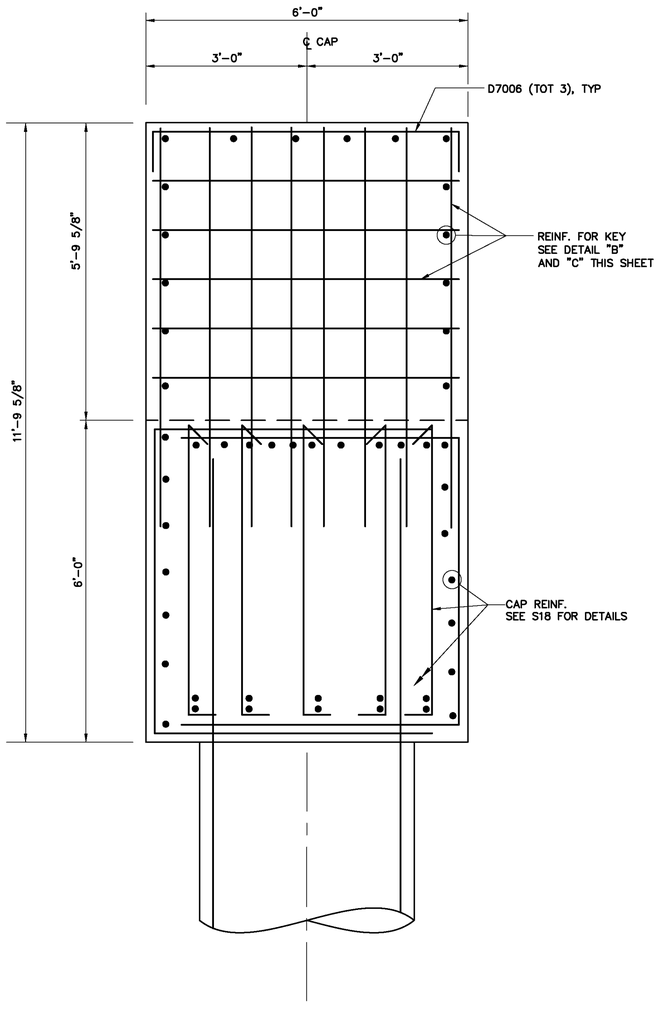

SECTION A
SCALE: 3/4"= 1'-0"
S18 | S19

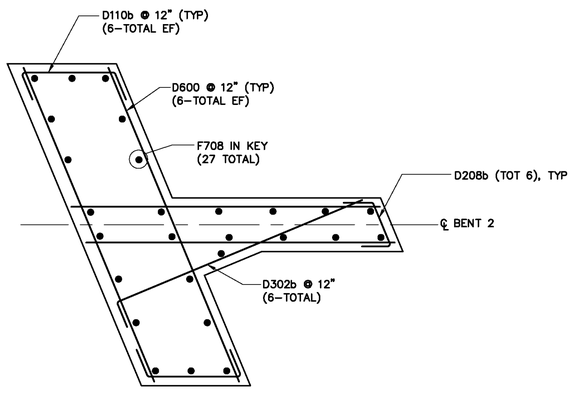

SECTION B
SCALE: 3/4"= 1'-0"
S18 | S19

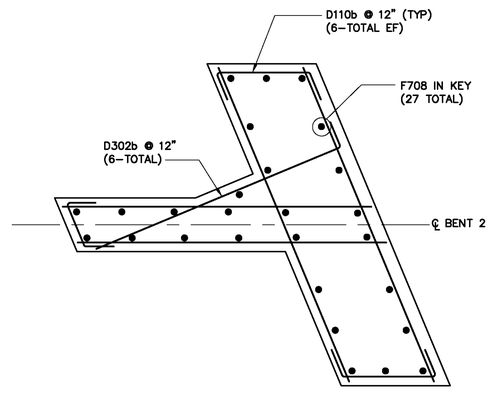

SECTION C
SCALE: 3/4"= 1'-0"
S18 | S19

ASBUILT

BID NO. 7185

COMPLETION DATE 03/25/2016

R.E. NAME BONAVENTURE EZEJI

2'-0" 0'-0" 1'-0" 2'-0"
SCALE: 3/4"=1'-0"

DIGALERT
DIAL TOLL FREE
1-800-422-4133
AT LEAST TWO DAYS BEFORE YOU DIG
UNDERGROUND SERVICE ALERT OF SOUTHERN CALIFORNIA

MOFFATT & NICHOL
3780 KILROY AIRPORT WAY, SUITE 600
LONG BEACH, CALIFORNIA, 90806
562-426-9551

DATE

REGISTERED PROFESSIONAL ENGINEER
YONG DENG
NO. C65629
EXP. 09/30/13
CIVIL
STATE OF CALIFORNIA

MARK	REVISIONS	APPR.	DATE

DESIGNED BY RW DRAWN BY TP CHECKED BY MSN

UPRR BRIDGE 55.54 LOS ANGELES SUB

CITY OF RIVERSIDE, CALIFORNIA
PUBLIC WORKS DEPARTMENT

RIVERSIDE AVE UNDERPASS

BENT NO.2 REINFORCING DETAILS (2 OF 2)

HORIZ. SCALE: AS SHOWN VERT. SCALE: AS SHOWN

STRUCTURE SHEET NO. S19

ACCT. NO. -
W.O. NO. -

R-4240

SHEET 105 OF 146

FILE NO.

DRAWING NAME: \\netapp1b02\lb_projects\8318_lb13\CADD\Sheet\STRUCTURE\635501S019.dwg
PLOT DATE: Sep 27, 2016 - 9:50am PLOTTED BY: dleigh

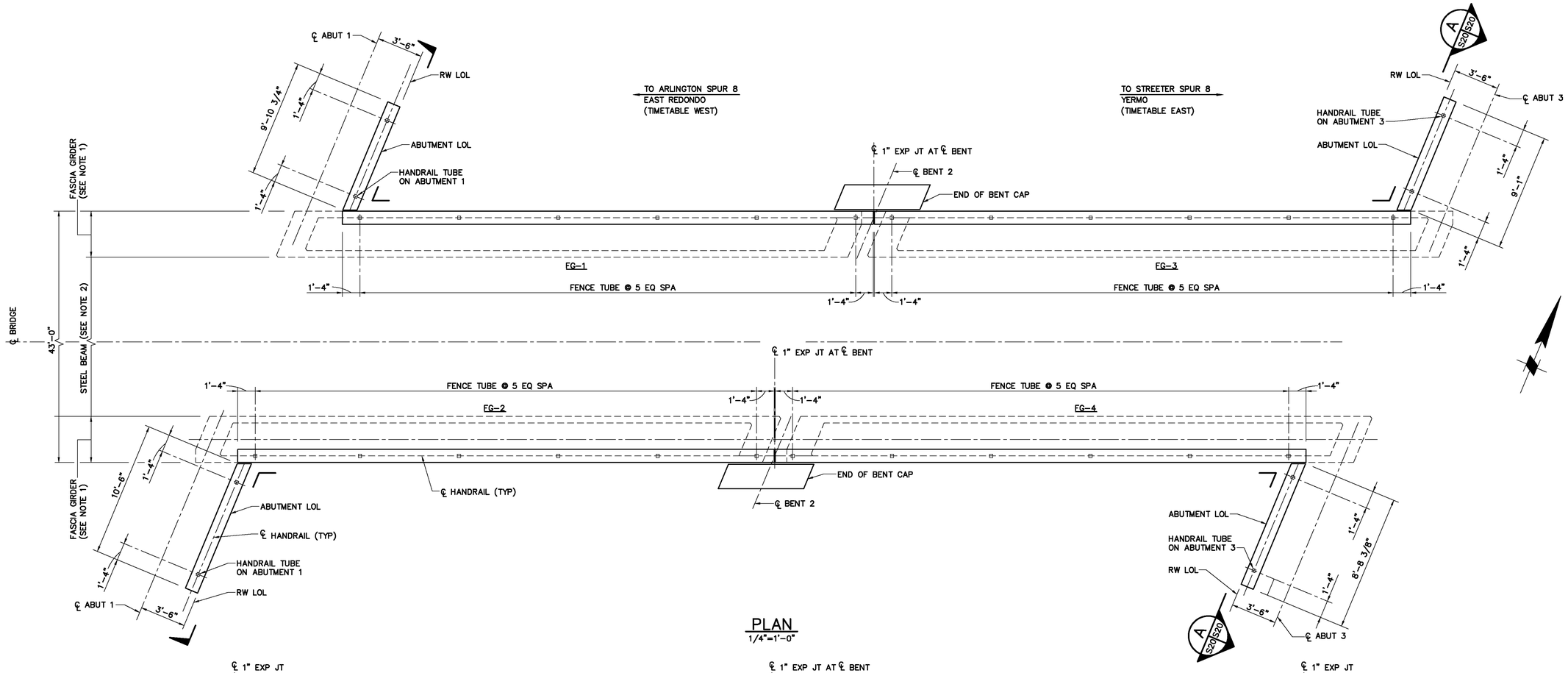

MATERIAL SCHEDULE
(CURB & POSTS)

TOTAL	UNIT	DESCRIPTION
1.0	CU.YD.	CONC CURB ABUT 1 & ABUT 3
32	EA	POST ANCHORAGE

NOTES:

1. SEE S34 THRU S37 FOR DETAILS OF FASCIA GIRDERS FG-1 THRU FG-4.
2. SEE S23 FOR STEEL BEAM LAYOUT.
3. SEE S40 FOR HANDRAIL DETAILS.

** AT CONTRACTOR'S OPTION, CAST-IN-PLACE CONCRETE CURB IS ALLOWED TO BE CASTED TOGETHER WITH PC/PS FASCIA GIRDER.

ASBUILT

BID NO. 7185

COMPLETION DATE 03/25/2016

R.E. NAME BONAVENTURE EZEJI

2'-0" 0'-0" 1'-0" 2'-0"
SCALE: 3/4"=1'-0"

4'-0" 0'-0" 4'-0" 8'-0"
SCALE: 1/4"=1'-0"

DIGALERT
DIAL TOLL FREE
1-800-422-4133
AT LEAST TWO DAYS BEFORE YOU DIG
UNDERGROUND SERVICE ALERT OF SOUTHERN CALIFORNIA

MOFFATT & NICHOL
3780 KILROY AIRPORT WAY, SUITE 600
LONG BEACH, CALIFORNIA, 90806
562-426-9551

REGISTERED PROFESSIONAL ENGINEER
YONG DENG
NO. C65629
EXP. 09/30/13
CIVIL
STATE OF CALIFORNIA

DATE

MARK	REVISIONS	APPR.	DATE

DESIGNED BY RW DRAWN BY TP CHECKED BY MSN

UPRR BRIDGE 55.54 LOS ANGELES SUB

CITY OF RIVERSIDE, CALIFORNIA
PUBLIC WORKS DEPARTMENT

RIVERSIDE AVE UNDERPASS

CURB AND POST FRAMING AND REINFORCING DETAILS (1 OF 2)

HORIZ. SCALE: AS SHOWN VERT. SCALE: AS SHOWN

STRUCTURE SHEET NO. S20

ACCT. NO. -
W.O. NO. -

R-4240

SHEET 106 OF 146

FILE NO.

DRAWING NAME: \\netapp1b02\lb_projects\8318 lb13\CADD\Sheet\STRUCTURE\8355015S20.dwg
PLOT DATE: Sep 27, 2016 - 8:30am PLOTTED BY: dreigh

REINFORCING SCHEDULE

ABUTMENT #1

TOTAL	MARK	SIZE	LENGTH	SHAPE
134	F700b	7	7'-0"	
134	F1708b	7	17'-8"	
16	D508	5	5'-8"	
14	D608	5	6'-8"	
28	H3508	9	35'-8"	
28	H2908	9	29'-8"	
5	D1309	5	13'-9"	
5	D1409	5	14'-9"	
1	D1403	5	14'-3"	
28	D711	5	7'-11"	
15	F711	5	7'-11"	
4	D3508	5	35'-8"	
4	D2908	5	29'-8"	
50	D304b	5	3'-4"	
30	D311	5	3'-11"	
11	D706	5	7'-6"	
8	D711	5	7'-11"	
8	F711	7	7'-11"	
1	D1408	5	14'-8"	
5	D1502	5	15'-2"	
5	D1402	5	14'-2"	
28	D711	5	7'-11'	
16	F711	7	7'-11'	
11	D608	5	6'-8"	
14	D410	5	4'-10"	
7	D302	5	3'-2"	

SET LIST

MARK TO MARK	SIZE	MIN. LENGTH	MAX. LENGTH	NO. OF BARS/SET	NO. OF SETS	SHAPE
D807 TO D1004	5	8'-7"	10'-4"	5	1	
D802 TO D911	5	8'-2"	9'-11"	5	1	

EST. WT. OF REINFORCING STEEL FOR ABUTMENT #1 = 15,622 LB.

REINFORCING SCHEDULE

ABUTMENT #3

TOTAL	MARK	SIZE	LENGTH	SHAPE
134	F700b	7	7'-0"	
134	F1708b	7	17'-8"	
16	D508	5	5'-8"	
14	D608	5	6'-8"	
28	H2208	9	22'-8"	
28	H3508	9	35'-8"	
5	D1005	5	10'-5"	
5	D1107	5	11'-7"	
1	D1011	5	10'-11"	
27	D711	5	7'-11"	
12	F1711	7	7'-11"	
7	D410	5	4'-10"	
7	F711	5	7'-11"	
4	D2908	5	29'-8"	
4	D3508	5	35'-8"	
46	D304b	5	3'-4"	
30	D311	5	3'-11"	
11	D706	5	7'-6"	
8	D711	5	7'-11"	
8	F711	7	7'-11"	
1	D1607	5	16'-7"	
5	D1701	5	17'-1'	
5	D1601	5	16'-1'	
30	D711	5	7'-1"	
18	F711	7	7'-11"	
11	D608	5	6'-8"	

SET LIST

MARK TO MARK	SIZE	MIN. LENGTH	MAX. LENGTH	NO. OF BARS/SET	NO. OF SETS	SHAPE
D703 TO D811	5	7'-3"	8'-11"	5	1	
D908 TO D1104	5	9'-8"	11'-4"	5	1	

EST. WT. OF REINFORCING STEEL FOR ABUTMENT #3 = 13,677 LB.

BENDING DIAGRAM

(DIMENSIONS ARE OUT TO OUT)

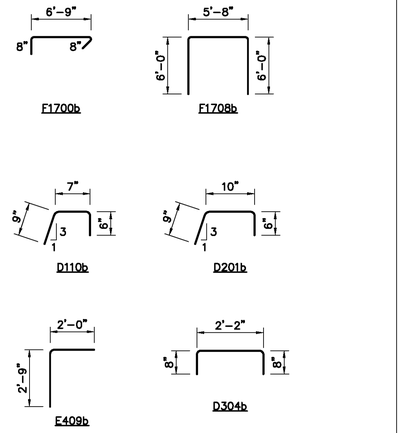

NOTE:
BAR DESIGNATIONS CONSIST OF BAR SIZE & LENGTH FOLLOWED BY THE LETTER "b" IF BENT. BAR SIZES ARE REPRESENTED BY THE LETTERS A THROUGH L CORRESPONDING TO BAR SIZE #2 THROUGH #18. BAR LENGTHS ARE GIVEN IN FEET AND INCHES; THE LAST TWO DIGITS ARE INCHES.

REINFORCING SCHEDULE

ABUT #1 FASCIA WALL

TOTAL	MARK	SIZE	LENGTH	SHAPE
154	D110b	5	11'-0"	
28	D201b	5	20'-1"	
14	D6507	5	65'-7"	
67	D1209	5	12'-9"	

EST. WT. OF REINFORCING STEEL FOR ABUTMENT #1 FASCIA WALL = 4,202 LB.

REINFORCING SCHEDULE

ABUT #3 FASCIA WALL

TOTAL	MARK	SIZE	LENGTH	SHAPE
154	D110b	5	11'-0"	
28	D201b	5	20'-1"	
14	D6507	5	65'-7"	
67	D1209	5	12'-9"	

EST. WT. OF REINFORCING STEEL FOR ABUTMENT #3 FASCIA WALL = 4,202 LB.

REINFORCING SCHEDULE

APPROACH SLABS

TOTAL	MARK	SIZE	LENGTH	SHAPE
88	D1208	5	12'-8"	
56	E409b	6	4'-9"	
–	–	–	–	

SET LIST

MARK TO MARK	SIZE	MIN. LENGTH	MAX. LENGTH	NO. OF BARS/SET	NO. OF SETS	SHAPE
D101 TO D1208	5	1'-0"	12'-8"	11	8	
E408 TO E911	6	4'-8"	9'-11"	26	28	
–	–	–	–	–	–	–

EST. WT. OF REINFORCING STEEL FOR APPROACH SLABS = 4,467 LB.

ASBUILT

BID NO. 7185

COMPLETION DATE 03/25/2016

R.E. NAME BONAVENTURE EZEJI

DIGALERT
DIAL TOLL FREE
1-800-422-4133
AT LEAST TWO DAYS BEFORE YOU DIG
UNDERGROUND SERVICE ALERT OF SOUTHERN CALIFORNIA

MOFFATT & NICHOL
3780 KILROY AIRPORT WAY, SUITE 600
LONG BEACH, CALIFORNIA, 90806
562-426-9551

DATE

REGISTERED PROFESSIONAL ENGINEER
YONG DENG
NO. C65629
EXP. 09/30/13
CIVIL
STATE OF CALIFORNIA

MARK	REVISIONS	APPR.	DATE

DESIGNED BY RW DRAWN BY TP CHECKED BY MSN

UPRR BRIDGE 55.54 LOS ANGELES SUB

STRUCTURE SHEET NO. S21

CITY OF RIVERSIDE, CALIFORNIA
PUBLIC WORKS DEPARTMENT

ACCT. NO. –
W.O. NO. –

RIVERSIDE AVE UNDERPASS

R-4240

REINFORCING SCHEDULE (1 OF 2)

SHEET 107 OF 146

HORIZ. SCALE: AS SHOWN VERT. SCALE: AS SHOWN

FILE NO.

DRAWING NAME: \\retroplot02\lb_projects\6318 lb13\CADD\Sheet\STRUCTURE\635501S021.dwg
PLOT DATE: Sep 27, 2016 - 9:50am PLOTTED BY: dleigh

REINFORCING SCHEDULE

	TOTAL	MARK	SIZE	LENGTH	SHAPE
BENT #2	24	J2201	11	22'-1"	
	24	J2807	11	28'-7"	
	10	F2201	7	22'-1"	
	10	F2807	7	28'-7"	
	510	E707b	6	7'-7"	
	204	E1608b	6	16'-8"	
	5	D600	5	6'-0"	
	12	D600	5	6'-0"	
	27	F708	7	7'-8"	
	16	D208b	5	2'-8"	
	6	D108b	5	1'-8"	
	6	D302b	5	3'-2"	
	14	D600	5	6'-0"	
	5	D600	5	6'-0"	
	27	F708	7	7'-8"	
	16	D208	5	2'-8"	
	6	D108	5	1'-8"	
	6	D302b	5	3'-2"	
	24	D507	5	5'-7"	

BENDING DIAGRAM

(DIMENSIONS ARE OUT TO OUT)

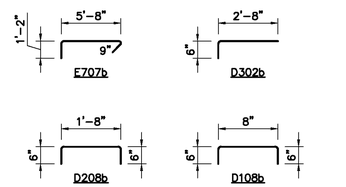

NOTE:
BAR DESIGNATIONS CONSIST OF BAR SIZE & LENGTH FOLLOWED BY THE LETTER "b" IF BENT. BAR SIZES ARE REPRESENTED BY THE LETTERS A THROUGH L CORRESPONDING TO BAR SIZE #2 THROUGH #18. BAR LENGTHS ARE GIVEN IN FEET AND INCHES; THE LAST TWO DIGITS ARE INCHES.

EST. WT. OF REINFORCING STEEL FOR BENT #2 = 20,128 LB.

REINFORCING SCHEDULE

	TOTAL	MARK	SIZE	LENGTH	SHAPE
CURB & POSTS ON FG-1 & FG-4	108	C211b	4	2'-11"	
	8	C4006	4	40'-6"	
	6	C206b	4	2'-6"	
	–	–	–	–	
	–	–	–	–	

BENDING DIAGRAM

(DIMENSIONS ARE OUT TO OUT)

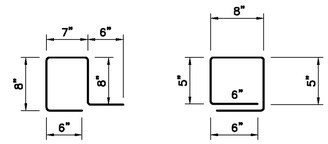

NOTE:
BAR DESIGNATIONS CONSIST OF BAR SIZE & LENGTH FOLLOWED BY THE LETTER "b" IF BENT. BAR SIZES ARE REPRESENTED BY THE LETTERS A THROUGH L CORRESPONDING TO BAR SIZE #2 THROUGH #18. BAR LENGTHS ARE GIVEN IN FEET AND INCHES; THE LAST TWO DIGITS ARE INCHES.

EST. WT. OF REINFORCING STEEL FOR FG-1 & FG-4 = 437 LB.

CURB REINFORCING SCHEDULE

	TOTAL	MARK	SIZE	LENGTH	SHAPE
CURB 1	14	C211b	4	2'-11"	
	4	C907	4	9'-7"	
	–	–	–	–	
CURB 2	15	C211b	4	2'-11"	
	4	C1004	4	10'-4"	
	–	–	–	–	
CURB 3	13	C211b	4	2'-11"	
	4	C805	4	8'-5"	
	–	–	–	–	
CURB 4	13	C211b	4	2'-11"	
	4	C809	4	8'-11"	
	–	–	–	–	

BENDING DIAGRAM

(DIMENSIONS ARE OUT TO OUT)

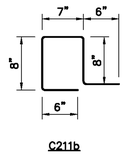

NOTE:
BAR DESIGNATIONS CONSIST OF BAR SIZE & LENGTH FOLLOWED BY THE LETTER "b" IF BENT. BAR SIZES ARE REPRESENTED BY THE LETTERS A THROUGH L CORRESPONDING TO BAR SIZE #2 THROUGH #18. BAR LENGTHS ARE GIVEN IN FEET AND INCHES; THE LAST TWO DIGITS ARE INCHES.

EST. WT. OF REINFORCING STEEL FOR CURB 1 TO CURB 4 = 206 LB.

REINFORCING SCHEDULE

	TOTAL	MARK	SIZE	LENGTH	SHAPE
CURB & POSTS ON FG-2 & FG-3	106	C211b	4	2'-11"	
	8	C4001	4	40'-1"	
	6	C206b	4	2'-6"	
	–	–	–	–	
	–	–	–	–	

BENDING DIAGRAM

(DIMENSIONS ARE OUT TO OUT)

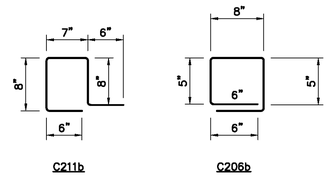

NOTE:
BAR DESIGNATIONS CONSIST OF BAR SIZE & LENGTH FOLLOWED BY THE LETTER "b" IF BENT. BAR SIZES ARE REPRESENTED BY THE LETTERS A THROUGH L CORRESPONDING TO BAR SIZE #2 THROUGH #18. BAR LENGTHS ARE GIVEN IN FEET AND INCHES; THE LAST TWO DIGITS ARE INCHES.

EST. WT. OF REINFORCING STEEL FOR FG-2 & FG-3 = 431 LB.

ASBUILT

BID NO. 7185

COMPLETION DATE 03/25/2016

R.E. NAME BONAVENTURE EZEJI

DIGALERT
DIAL TOLL FREE
1-800-422-4133
AT LEAST TWO DAYS BEFORE YOU DIG
UNDERGROUND SERVICE ALERT OF SOUTHERN CALIFORNIA

MOFFATT & NICHOL
3780 KILROY AIRPORT WAY, SUITE 600
LONG BEACH, CALIFORNIA, 90806
562-426-9551

DATE _____

REGISTERED PROFESSIONAL ENGINEER
YONG DENG
NO. C65629
EXP. 09/30/13
CIVIL
STATE OF CALIFORNIA

MARK	REVISIONS	APPR.	DATE
1	REVISED BENT REBAR	YD	10/22/13

DESIGNED BY RW DRAWN BY TP CHECKED BY MSN

UPRR BRIDGE 55.54 LOS ANGELES SUB

CITY OF RIVERSIDE, CALIFORNIA
PUBLIC WORKS DEPARTMENT

RIVERSIDE AVE UNDERPASS

REINFORCING SCHEDULE (2 OF 2)

HORIZ. SCALE: AS SHOWN VERT. SCALE: AS SHOWN

STRUCTURE SHEET NO. S22

ACCT. NO. –
W.O. NO. –

R-4240

SHEET 108 OF 146

FILE NO.

DRAWING NAME: \\ntoppb02\lb_projects\8318 lb13\CADD\Sheet\STRUCTURE\635501S022_Addendum1.dwg
PLOT DATE: Sep 27, 2016 - 9:30am PLOTTED BY: dleigh

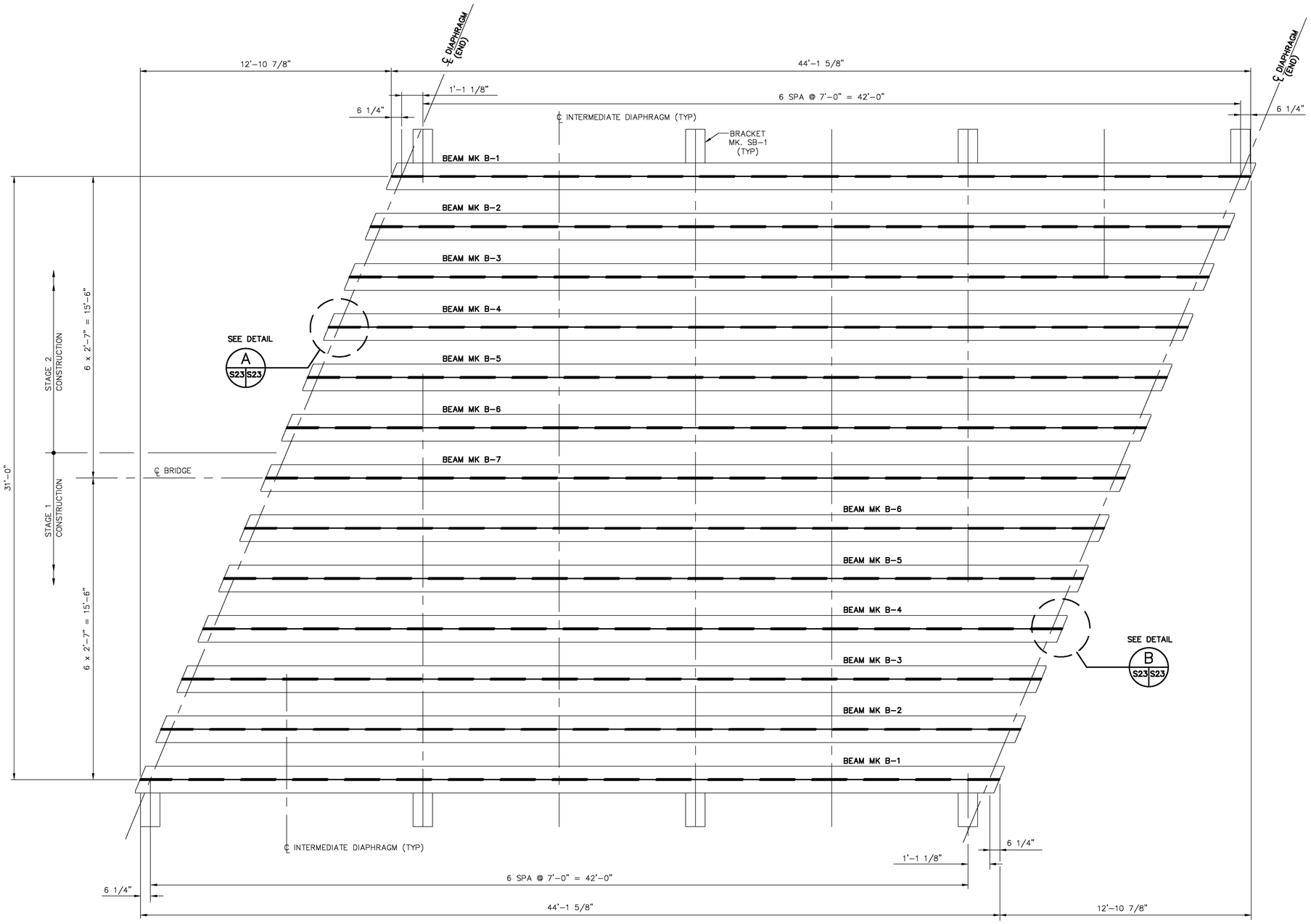

BEAM SPAN FRAMING
SCALE: 3/8" = 1'-0"

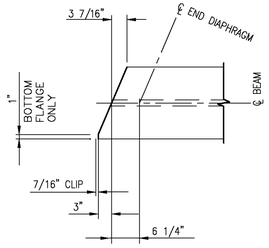

DETAIL A (S23 S23)
3/4"=1'-0"

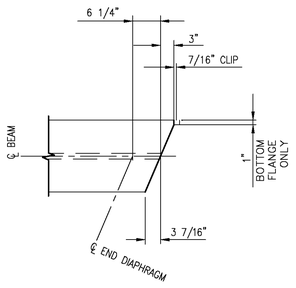

DETAIL B (S23 S23)
3/4"=1'-0"

NOTES:
1. FOR STRUCTURAL STEEL NOTES, SEE SHEET S3.
2. FOR BEAM DETAILS, SEE SHEETS S24 AND S25.
3. FOR DIAPHRAGM, BRACKET, AND SOLE PLATE DETAILS, SEE SHEET S29.

ASBUILT
BID NO. 7185
COMPLETION DATE 03/25/2016
R.E. NAME BONAVENTURE EZEJI

2'-0" 0'-0" 1'-0" 2'-0"
SCALE: 3/4"=1'-0"

4'-0" 0'-0" 2'-0" 4'-0"
SCALE: 3/8"=1'-0"

DIGALERT
DIAL TOLL FREE
1-800-422-4133
AT LEAST TWO DAYS BEFORE YOU DIG
UNDERGROUND SERVICE ALERT OF SOUTHERN CALIFORNIA

MOFFATT & NICHOL
3780 KILROY AIRPORT WAY, SUITE 600
LONG BEACH, CALIFORNIA, 90806
562-426-9551

DATE _____

REGISTERED PROFESSIONAL ENGINEER
YONG DENG
NO. C65629
EXP. 09/30/13
CIVIL
STATE OF CALIFORNIA

MARK	REVISIONS	APPR.	DATE

DESIGNED BY RW DRAWN BY TP CHECKED BY MSN

UPRR BRIDGE 55.54 LOS ANGELES SUB

CITY OF RIVERSIDE, CALIFORNIA
PUBLIC WORKS DEPARTMENT

RIVERSIDE AVE UNDERPASS

BEAM SPAN FRAMING PLAN

HORIZ. SCALE: AS SHOWN VERT. SCALE: AS SHOWN

STRUCTURE SHEET NO. S23
ACCT. NO. -
W.O. NO. -
R-4240
SHEET 109 OF 146
FILE NO.

DRAWING NAME: \\netapp1b02\lb_projects\8318 lb13\CADD\Sheet\STRUCTURE\635501S023.dwg
PLOT DATE: Sep 27, 2016 - 9:30am PLOTTED BY: dleigh

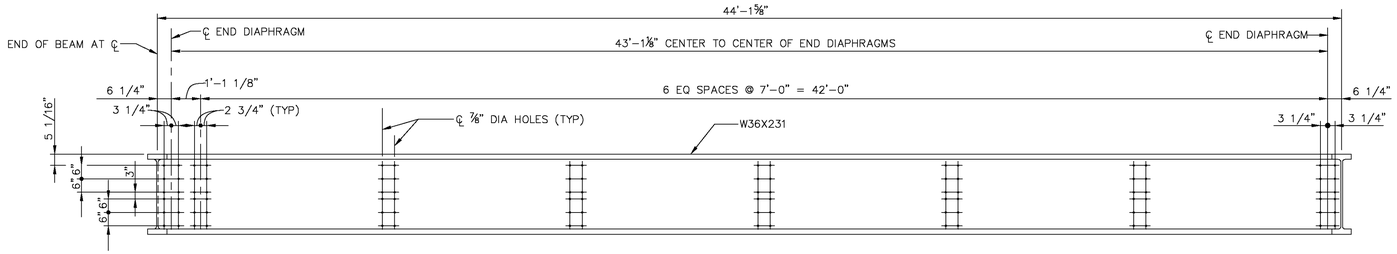

BEAM MK. B-1
SCALE: 3/8"= 1'-0"

SECTION
SCALE: 3/8"= 1'-0"

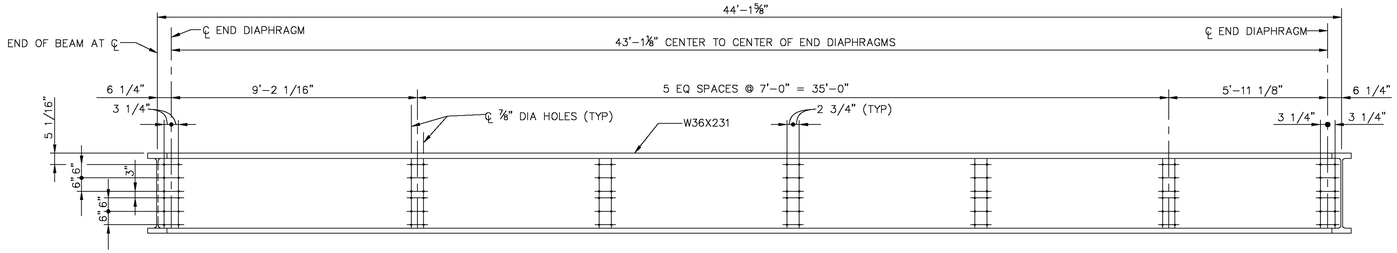

BEAM MK. B-2
SCALE: 3/8"= 1'-0"

SECTION
SCALE: 3/8"= 1'-0"

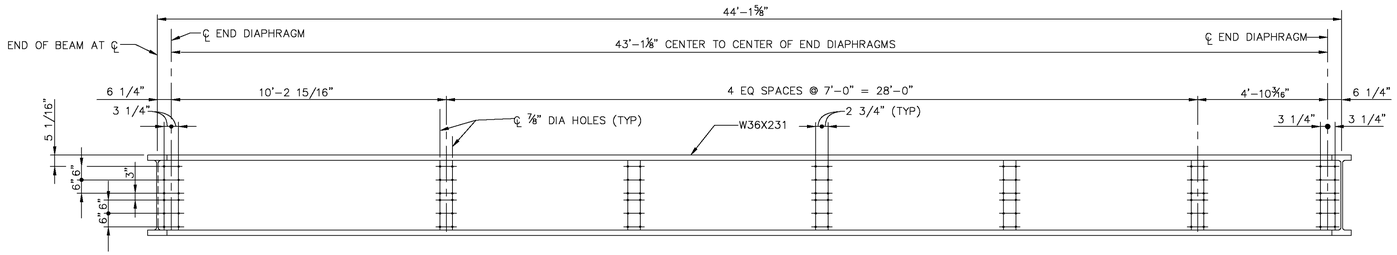

BEAM MK. B-3
SCALE: 3/8"= 1'-0"

SECTION
SCALE: 3/8"= 1'-0"

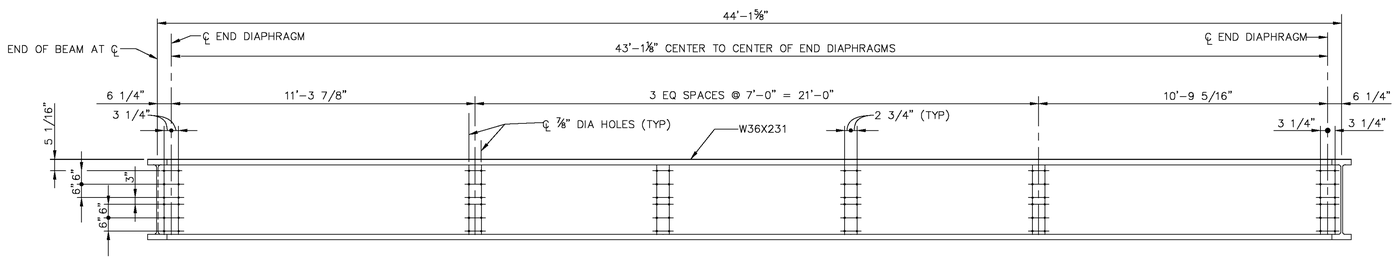

BEAM MK. B-4
SCALE: 3/8"= 1'-0"

SECTION
SCALE: 3/8"= 1'-0"

NOTES:
1. FOR STRUCTURAL STEEL NOTES, SEE SHEET S3.
2. ALL BEAM ELEVATIONS LOOKING FROM OUTSIDE OF SPAN.

ASBUILT

BID NO. 7185

COMPLETION DATE 03/25/2016

R.E. NAME BONAVENTURE EZEJI

4'-0" 0'-0" 2'-0" 4'-0"

SCALE: 3/8"=1'-0"

DIGALERT
DIAL TOLL FREE
1-800-422-4133
AT LEAST TWO DAYS BEFORE YOU DIG
UNDERGROUND SERVICE ALERT OF SOUTHERN CALIFORNIA

MOFFATT & NICHOL
3780 KILROY AIRPORT WAY, SUITE 600
LONG BEACH, CALIFORNIA, 90806
562-426-9551

DATE

REGISTERED PROFESSIONAL ENGINEER
YONG DENG
NO. C65629
EXP. 09/30/13
CIVIL
STATE OF CALIFORNIA

MARK	REVISIONS	APPR.	DATE

DESIGNED BY RW DRAWN BY TP CHECKED BY MSN

UPRR BRIDGE 55.54 LOS ANGELES SUB

CITY OF RIVERSIDE, CALIFORNIA
PUBLIC WORKS DEPARTMENT

RIVERSIDE AVE UNDERPASS

BEAM DETAILS (1 OF 2)

HORIZ. SCALE: AS SHOWN VERT. SCALE: AS SHOWN

STRUCTURE SHEET NO. S24

ACCT. NO. -
W.O. NO. -

R-4240

SHEET 110 OF 146

FILE NO.

DRAWING NAME: \\netapp1b02\lb_projects\8318 lb13\CADD\Sheet\STRUCTURE\635501S024.dwg
PLOT DATE: Sep 27, 2016 - 9:36am PLOTTED BY: dengh

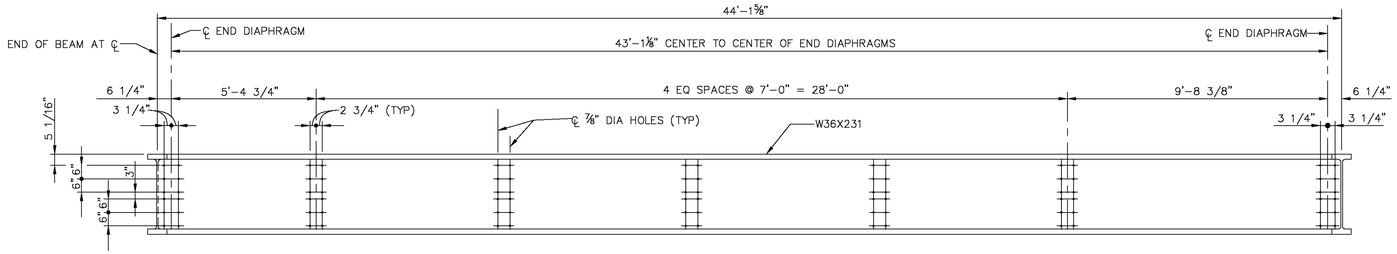

BEAM MK. B-5
SCALE: 3/8"= 1'-0"

SECTION
SCALE: 3/8"= 1'-0"

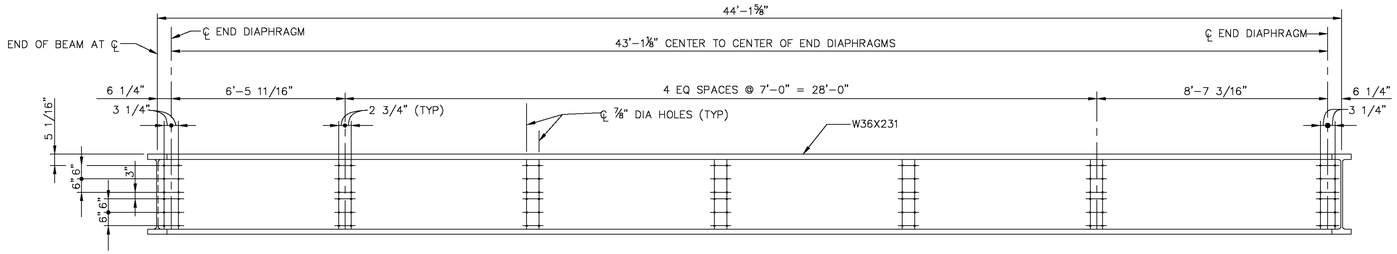

BEAM MK. B-6
SCALE: 3/8"= 1'-0"

SECTION
SCALE: 3/8"= 1'-0"

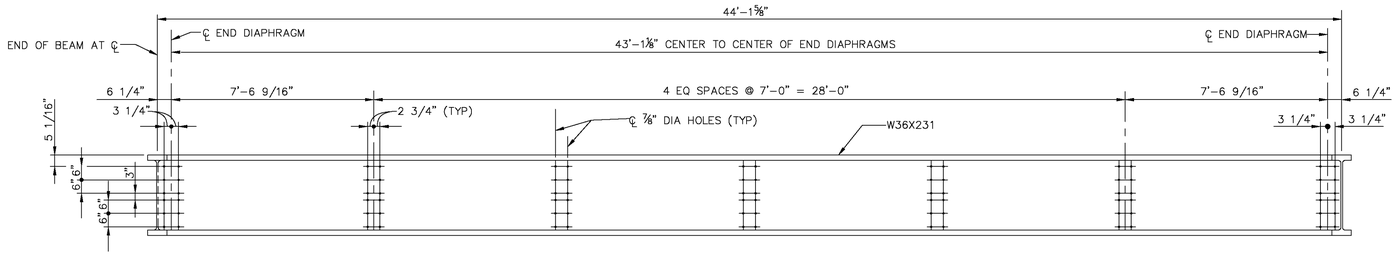

BEAM MK. B-7
SCALE: 3/8"= 1'-0"

SECTION
SCALE: 3/8"= 1'-0"

NOTES:
1. FOR STRUCTURAL STEEL NOTES, SEE SHEET S3.
2. ALL BEAM ELEVATIONS LOOKING FROM OUTSIDE OF SPAN.

ASBUILT

BID NO. 7185

COMPLETION DATE 03/25/2016

R.E. NAME BONAVENTURE EZEJI

4'-0" 0'-0" 2'-0" 4'-0"

SCALE: 3/8"=1'-0"

DIGALERT
DIAL TOLL FREE
1-800-422-4133
AT LEAST TWO DAYS BEFORE YOU DIG
UNDERGROUND SERVICE ALERT OF SOUTHERN CALIFORNIA

MOFFATT & NICHOL
3780 KILROY AIRPORT WAY, SUITE 600
LONG BEACH, CALIFORNIA, 90806
562-426-9551

DATE _____

REGISTERED PROFESSIONAL ENGINEER
YONG DENG
NO. C65629
EXP. 09/30/13
CIVIL
STATE OF CALIFORNIA

MARK	REVISIONS	APPR.	DATE

DESIGNED BY RW DRAWN BY TP CHECKED BY MSN

UPRR BRIDGE 55.54 LOS ANGELES SUB

CITY OF RIVERSIDE, CALIFORNIA
PUBLIC WORKS DEPARTMENT

RIVERSIDE AVE UNDERPASS

BEAM DETAILS (2 OF 2)

HORIZ. SCALE: AS SHOWN VERT. SCALE: AS SHOWN

STRUCTURE SHEET NO. S25

ACCT. NO. -
W.O. NO. -

R-4240

SHEET 111 OF 146

FILE NO.

DRAWING NAME: \\netapp1b02\lb_projects\8318 lb13\CADD\Sheet\STRUCTURE\635501S025.dwg
PLOT DATE: Sep 27, 2016 - 9:36am PLOTTED BY: dhigh

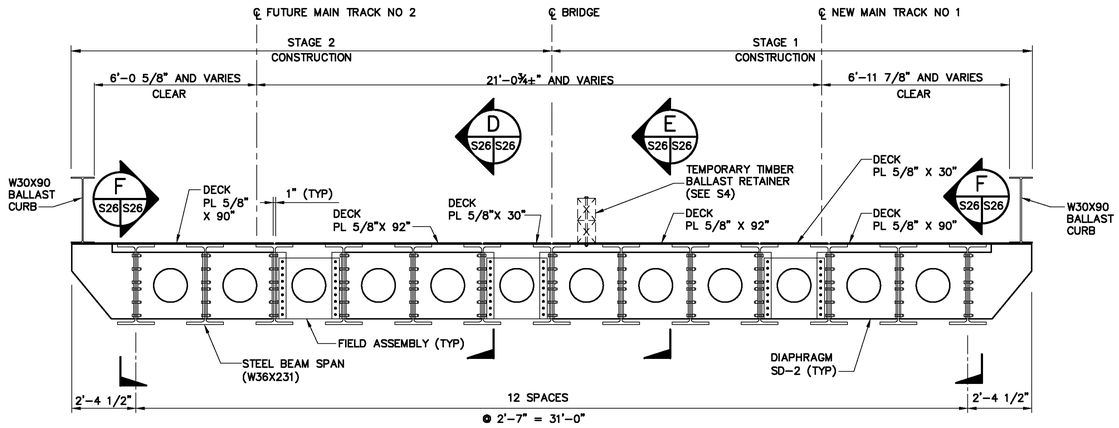

SECTION – SPAN AT END DIAPHRAGMS

SCALE: 3/8"= 1'-0"

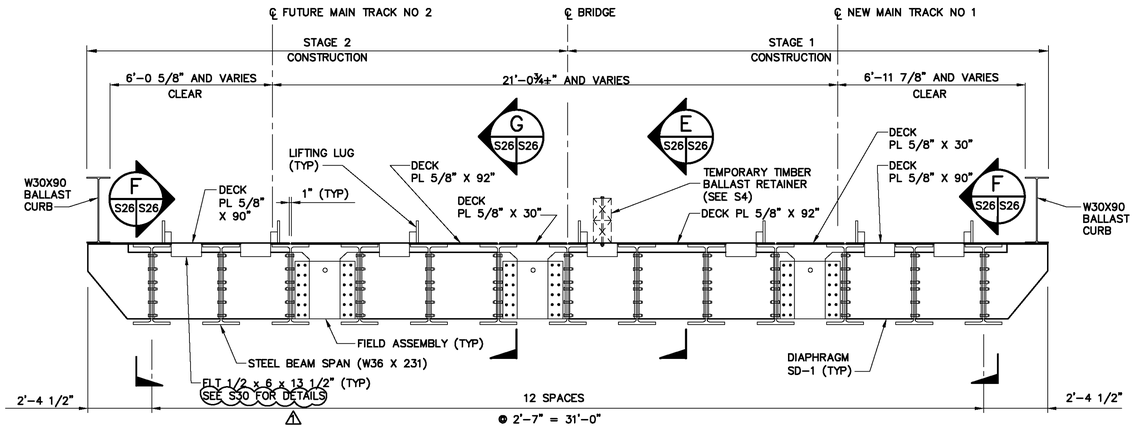

SECTION – SPAN AT INTERIOR DIAPHRAGM

SCALE: 3/8"= 1'-0"

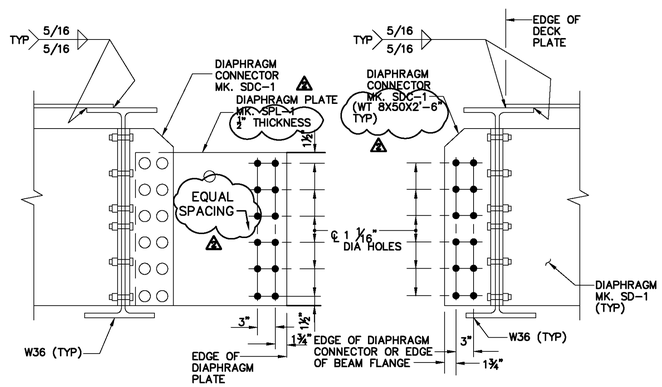

CONNECTOR DETAIL AT INTERIOR DIAPHRAGM

SCALE: 1"=1'-0"

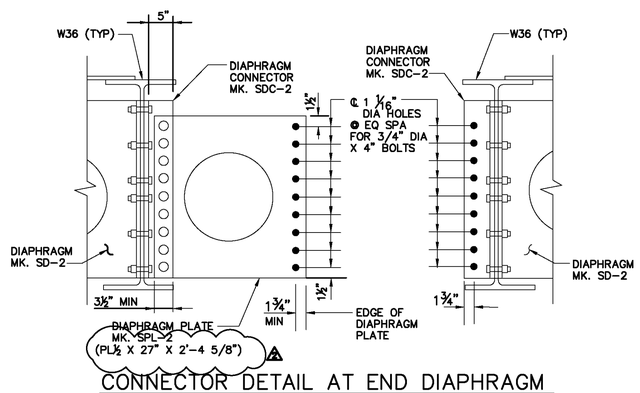

CONNECTOR DETAIL AT END DIAPHRAGM

SCALE: 1"=1'-0" (PARTIAL SECTION SHOWN)

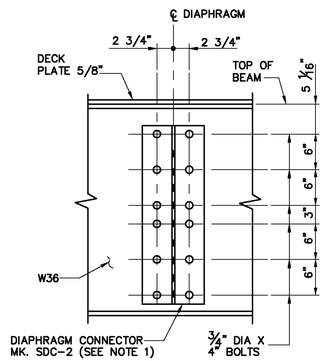

SECTION D S26 S26

SCALE: 1"=1'-0"

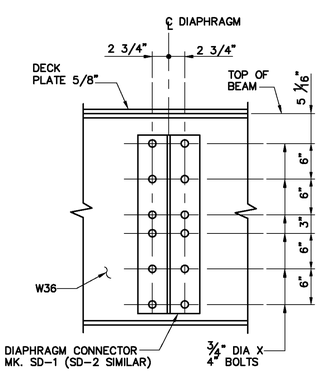

SECTION E S26 S26

SCALE: 1"=1'-0"

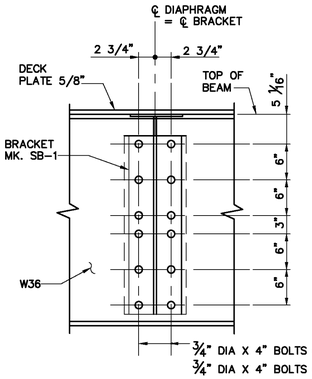

SECTION F S26 S26

SCALE: 1"=1'-0"

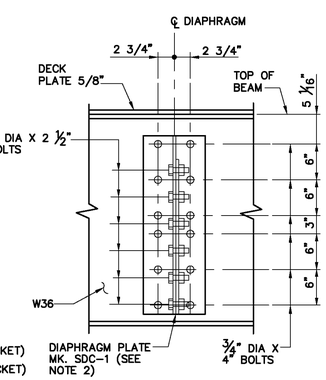

SECTION G S26 S26

SCALE: 1"=1'-0"

NOTES:

1. SEE S-29 FOR SDC-2.
2. FOR FIELD ASSEMBLY, ONE SIDE SLOTTED HOLES ARE ALLOWABLE. CONTRACTOR SHALL PROVIDE SHOP DRAWINGS FOR REVIEW. PREASSEMBLE BEFORE SHIPPING.

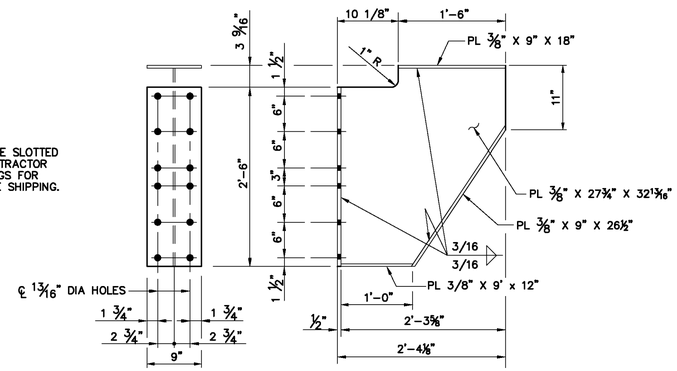

BRACKET MK. SB–1 (EST. WT = 155 LB)

SCALE: 1"=1'-0"

ASBUILT

BID NO. 7185

COMPLETION DATE 03/25/2016

R.E. NAME BONAVENTURE EZEJI

4'-0" 0'-0" 2'-0" 4'-0"
SCALE: 3/8"=1'-0"

1'-0" 0'-0" 1'-0" 2'-0"
SCALE: 1"=1'-0"

DIGALERT
DIAL TOLL FREE 1-800-422-4133
AT LEAST TWO DAYS BEFORE YOU DIG
UNDERGROUND SERVICE ALERT OF SOUTHERN CALIFORNIA

MOFFATT & NICHOL
3780 KILROY AIRPORT WAY, SUITE 600
LONG BEACH, CALIFORNIA, 90806
562-426-9551

DATE

REGISTERED PROFESSIONAL ENGINEER — YONG DENG — NO. C65629 — EXP. 09/30/13 — CIVIL — STATE OF CALIFORNIA

MARK	REVISIONS	APPR.	DATE
2	AS BUILT		
1	REVISED SDC-2 AND FLT DETAILS	YD	10/16/13

DESIGNED BY RW DRAWN BY TP CHECKED BY MSN

UPRR BRIDGE 55.54 LOS ANGELES SUB

CITY OF RIVERSIDE, CALIFORNIA
PUBLIC WORKS DEPARTMENT

RIVERSIDE AVE UNDERPASS

BEAM SPAN ASSEMBLY DETAILS

HORIZ. SCALE: AS SHOWN VERT. SCALE: AS SHOWN

STRUCTURE SHEET NO. S26

ACCT. NO. –
W.O. NO. –

R–4240

SHEET 112 OF 146

FILE NO.

DRAWING NAME: \\ntcopb02\lb_projects\8318 lb13\CADD\Sheet\STRUCTURE\8355013026_Addendum1.dwg
PLOT DATE: Sep 27, 2016 - 9:30am PLOTTED BY: dleigh

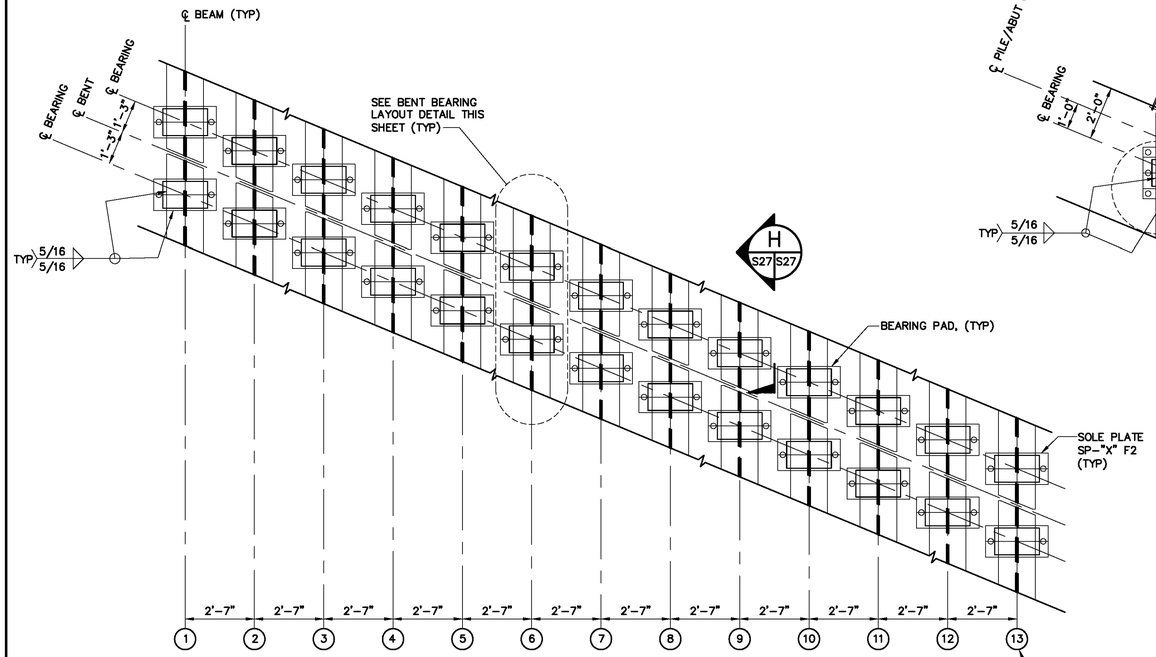

PLAN

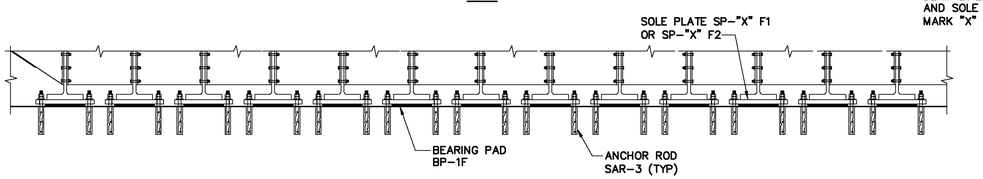

SECTION

BENT BEARING ASSEMBLY DETAIL

SCALE: 3/8"= 1'-0"

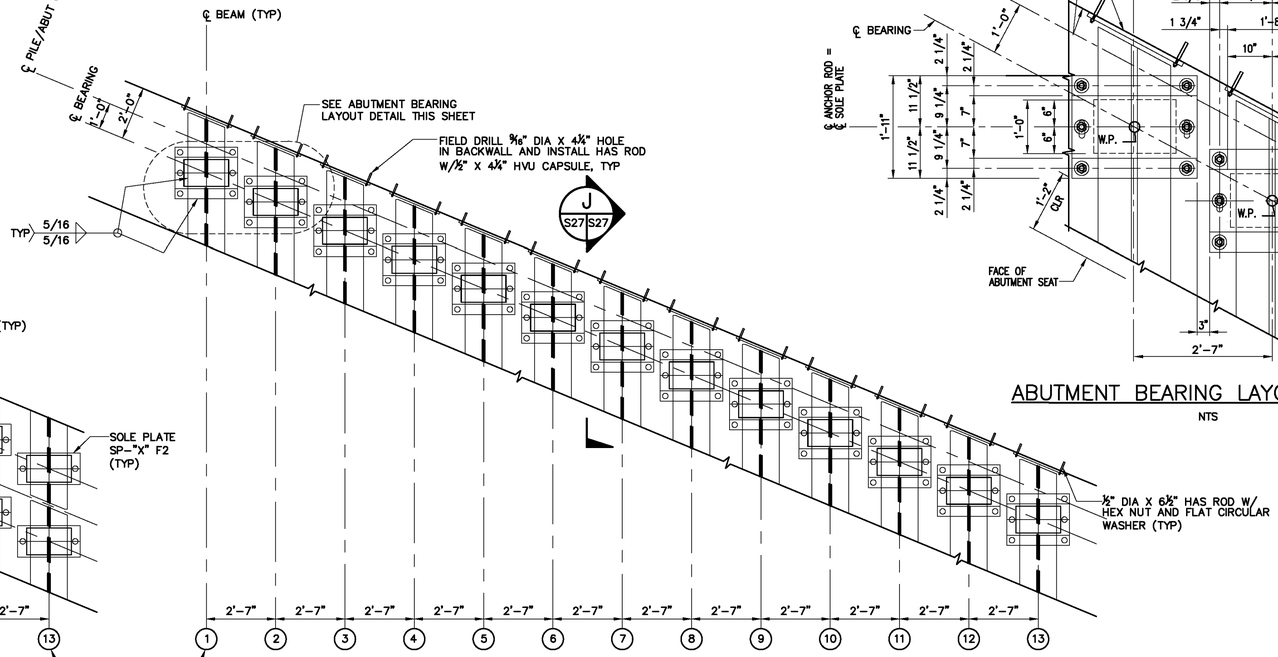

PLAN

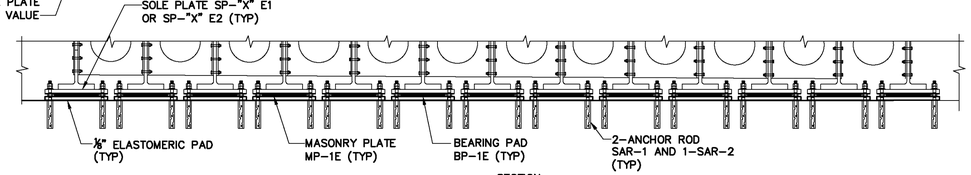

SECTION

ABUTMENT BEARING ASSEMBLY DETAIL

SCALE: 3/8"= 1'-0"

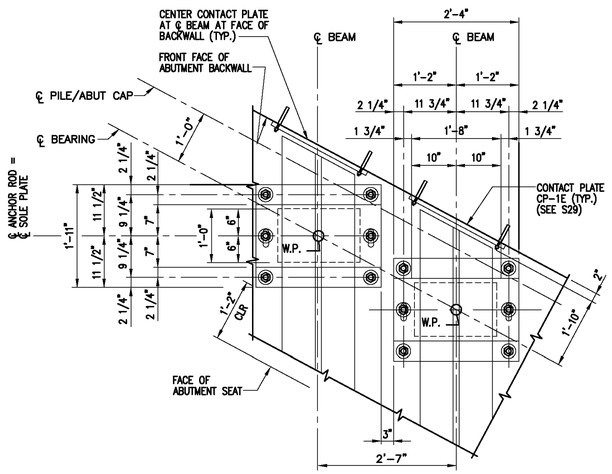

ABUTMENT BEARING LAYOUT DETAIL

NTS

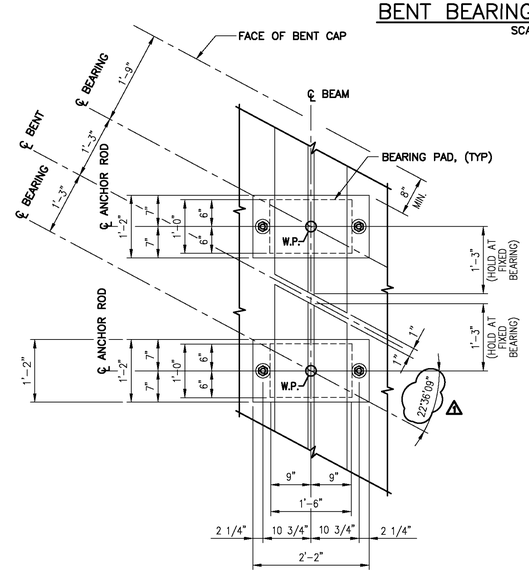

BENT BEARINGS LAYOUT DETAIL

SCALE: 3/4"= 1'-0"

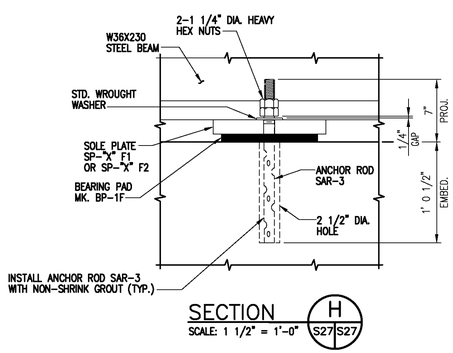

SECTION H S27 S27

SCALE: 1 1/2" = 1'-0"

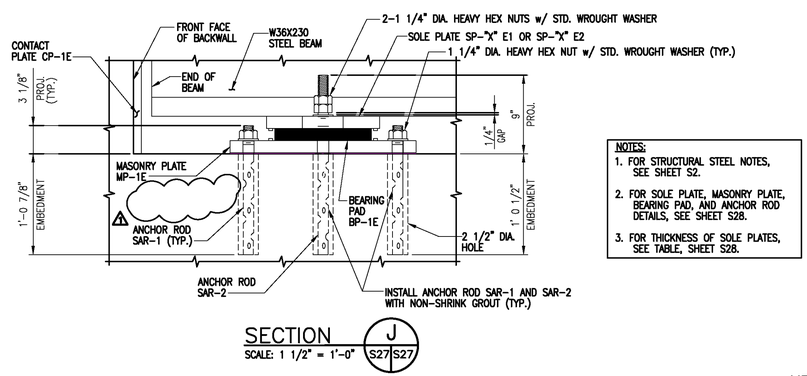

SECTION J S27 S27

SCALE: 1 1/2" = 1'-0"

NOTES:

1. FOR STRUCTURAL STEEL NOTES, SEE SHEET S2.
2. FOR SOLE PLATE, MASONRY PLATE, BEARING PAD, AND ANCHOR ROD DETAILS, SEE SHEET S28.
3. FOR THICKNESS OF SOLE PLATES, SEE TABLE, SHEET S28.

ASBUILT

BID NO. 7185

COMPLETION DATE 03/25/2016

R.E. NAME BONAVENTURE EZEJI

4'-0" 0'-0" 2'-0" 4'-0"
SCALE: 3/8"=1'-0"

2'-0" 0'-0" 1'-0" 2'-0"
SCALE: 3/4"=1'-0"

1'-0" 0'-0" 6" 1'-0"
SCALE: 1 1/2"=1'-0"

DIGALERT
DIAL TOLL FREE
1-800-422-4133
AT LEAST TWO DAYS BEFORE YOU DIG
UNDERGROUND SERVICE ALERT OF SOUTHERN CALIFORNIA

MOFFATT & NICHOL
3780 KILROY AIRPORT WAY, SUITE 600
LONG BEACH, CALIFORNIA, 90806
562-426-9551

DATE

REGISTERED PROFESSIONAL ENGINEER
YONG DENG
NO. C65629
EXP. 09/30/13
CIVIL
STATE OF CALIFORNIA

MARK	REVISIONS	APPR.	DATE
1	AS BUILT		

DESIGNED BY RW DRAWN BY TP CHECKED BY MSN

UPRR BRIDGE 55.54 LOS ANGELES SUB

CITY OF RIVERSIDE, CALIFORNIA
PUBLIC WORKS DEPARTMENT

RIVERSIDE AVE UNDERPASS

BEAM SPAN BEARING ASSEMBLEY DETAILS (1 OF 2)

HORIZ. SCALE: AS SHOWN VERT. SCALE: AS SHOWN

STRUCTURE SHEET NO. S27

ACCT. NO. –
W.O. NO. –

R-4240

SHEET 113 OF 146

FILE NO.

DRAWING NAME: \\netapp1b02\ib_projects\8318_ib13\CADD\Sheet\STRUCTURE\635501S027.dwg
PLOT DATE: Sep 27, 2016 - 9:36am PLOTTED BY: dleigh

BEARING PAD/SOLE PLATE/MASONRY PLATE/CONTACT PLATE DATA

SPAN	ABUTMENT/BENT	BEARING PAD		SOLE PLATE						MASONRY PLATE				CONTACT PLATE			
		MK.	REQUIRED	MK.	t (in)	t1 (in)	t2 (in)	EST. WT. EACH (lb)	REQUIRED	MK.	t (in)	EST. WT. EACH (lb)	REQUIRED	MK.	t (in)	EST. WT. EACH (lb)	REQUIRED
1	#1	BP-1E	13	SP-1E1	1 29/32	2	1 7/8	222	1	MP-1E & MATCHING 60 DUROMETER ELASTOMERIC PAD	1 1/2	274	13	CP-IE	1 ⚠2	105	13
				SP-2E1	1 29/32	2	1 7/8	222	1								
				SP-3E1	1 29/32	2	1 7/8	222	1								
				SP-4E1	1 29/32	2	1 7/8	222	1		1/8		13				
				SP-5E1	1 29/32	2	1 7/8	222	1								
				SP-6E1	1 29/32	2	1 7/8	222	1								
				SP-7E1	1 29/32	2	1 7/8	222	1								
				SP-8E1	1 29/32	2	1 7/8	222	1								
				SP-9E1	1 29/32	2	1 7/8	222	1								
				SP-10E1	1 29/32	2	1 7/8	222	1								
				SP-11E1	1 29/32	2	1 7/8	222	1								
				SP-12E1	1 29/32	2	1 7/8	222	1								
				SP-13E1	1 29/32	2	1 7/8	222	1								
1	#2	BP-1F	13	SP-1F1	1 29/32	2	1 7/8	222	1								
				SP-2F1	1 29/32	2	1 7/8	222	1								
				SP-3F1	1 29/32	2	1 7/8	222	1								
				SP-4F1	1 29/32	2	1 7/8	222	1								
				SP-5F1	1 29/32	2	1 7/8	222	1								
				SP-6F1	1 29/32	2	1 7/8	222	1								
				SP-7F1	1 29/32	2	1 7/8	222	1								
				SP-8F1	1 29/32	2	1 7/8	222	1								
				SP-9F1	1 29/32	2	1 7/8	222	1								
				SP-10F1	1 29/32	2	1 7/8	222	1								
				SP-11F1	1 29/32	2	1 7/8	222	1								
				SP-12F1	1 29/32	2	1 7/8	222	1								
				SP-13F1	1 29/32	2	1 7/8	222	1								
2	#2	BP-1F	13	SP-1F2	1 31/32	2	1 7/8	222	1								
				SP-2F2	1 31/32	2	1 7/8	222	1								
				SP-3F2	1 31/32	2	1 7/8	222	1								
				SP-4F2	1 31/32	2	1 7/8	222	1								
				SP-5F2	1 31/32	2	1 7/8	222	1								
				SP-6F2	1 31/32	2	1 7/8	222	1								
				SP-7F2	1 31/32	2	1 7/8	222	1								
				SP-8F2	1 31/32	2	1 7/8	222	1								
				SP-9F2	1 31/32	2	1 7/8	222	1								
				SP-10F2	1 31/32	2	1 7/8	222	1								
				SP-11F2	1 31/32	2	1 7/8	222	1								
				SP-12F2	1 31/32	2	1 7/8	222	1								
				SP-13F2	1 31/32	2	1 7/8	222	1								
2	#3	BP-1E	13	SP-1E2	1 31/32	2	1 7/8	222	1	MP-1E & MATCHING 60 DUROMETER ELASTOMERIC PAD	1 1/2	274	13	CP-IE	1 ⚠2	105	13
				SP-2E2	1 31/32	2	1 7/8	222	1								
				SP-3E2	1 31/32	2	1 7/8	222	1								
				SP-4E2	1 31/32	2	1 7/8	222	1		1/8		13				
				SP-5E2	1 31/32	2	1 7/8	222	1								
				SP-6E2	1 31/32	2	1 7/8	222	1								
				SP-7E2	1 31/32	2	1 7/8	222	1								
				SP-8E2	1 31/32	2	1 7/8	222	1								
				SP-9E2	1 31/32	2	1 7/8	222	1								
				SP-10E2	1 31/32	2	1 7/8	222	1								
				SP-11E2	1 31/32	2	1 7/8	222	1								
				SP-12E2	1 31/32	2	1 7/8	222	1								
				SP-13E2	1 31/32	2	1 7/8	222	1								

NOTE:
FOR DIMENSIONS OF BEARING PADS, SOLE PLATES AND MASONRY PLATES, SEE DETAILS, SHEET S27.

← TO ARLINGTON SPUR 8
EAST REDONDO
(TIMETABLE WEST)

TO STREETER SPUR 8 →
YERMO
(TIMETABLE EAST)

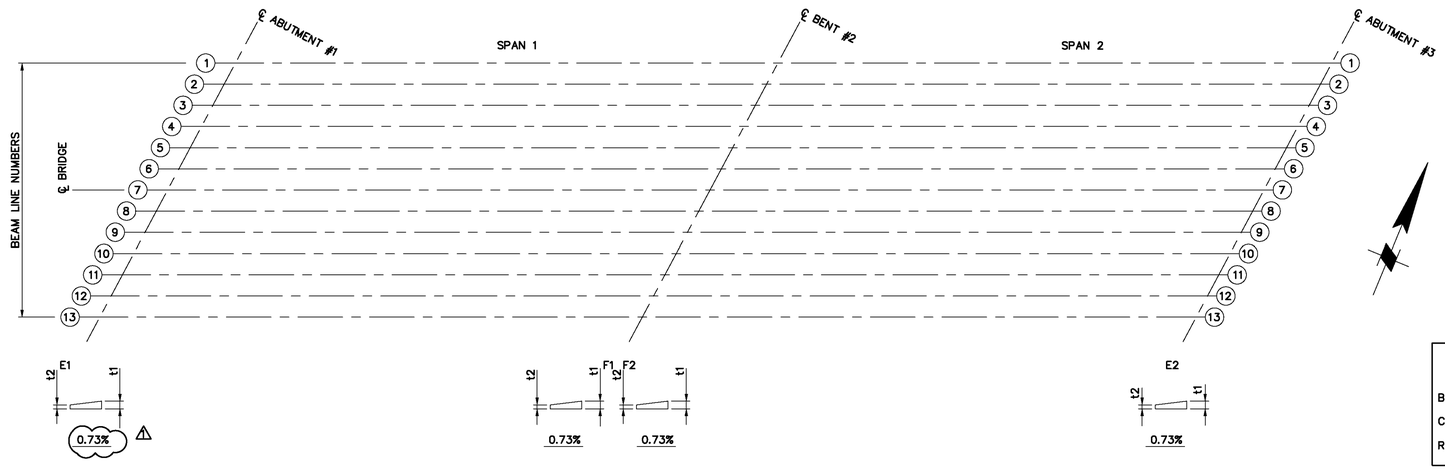

SOLE PLATE PLACEMENT

LONGITUDINAL GRADE:

ABUTMENT BEARING ASSEMBLY DETAIL

NTS

ASBUILT

BID NO. 7185

COMPLETION DATE 03/25/2016

R.E. NAME BONAVENTURE EZEJI

DIGALERT
DIAL TOLL FREE
1-800-422-4133
AT LEAST TWO DAYS BEFORE YOU DIG
UNDERGROUND SERVICE ALERT OF SOUTHERN CALIFORNIA

MOFFATT & NICHOL
3780 KILROY AIRPORT WAY, SUITE 600
LONG BEACH, CALIFORNIA, 90806
562-426-9551

DATE _____

REGISTERED PROFESSIONAL ENGINEER
YONG DENG
NO. C65629
EXP. 09/30/13
CIVIL
STATE OF CALIFORNIA

MARK	REVISIONS	APPR.	DATE
⚠2	AS BUILT		
⚠1	REVISED SOLE PLATE SLOPE AT ABUT #1	YD	10/16/13

DESIGNED BY RW DRAWN BY TP CHECKED BY MSN

UPRR BRIDGE 55.54 LOS ANGELES SUB

CITY OF RIVERSIDE, CALIFORNIA
PUBLIC WORKS DEPARTMENT

RIVERSIDE AVE UNDERPASS

BEAM SPAN BEARING ASSEMBLEY DETAILS (2 OF 2)

HORIZ. SCALE: AS SHOWN VERT. SCALE: AS SHOWN

STRUCTURE SHEET NO. S28

ACCT. NO. –
W.O. NO. –

R-4240

SHEET 114 OF 146

FILE NO.

DRAWING NAME: \\netapplb02\lb_projects\8318 lb13\CADD\Sheet\STRUCTURE\635501S028_Addendum1.dwg
PLOT DATE: Sep 27, 2016 - 9:31am PLOTTED BY: dleigh

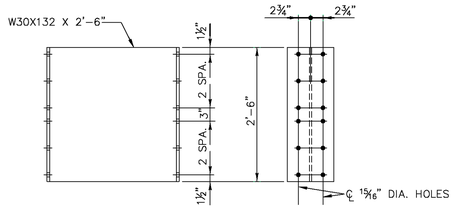

DIAPHRAGM MK. SD-1

SCALE: 3/4"= 1'-0"
EST. WT. = 330 LB.

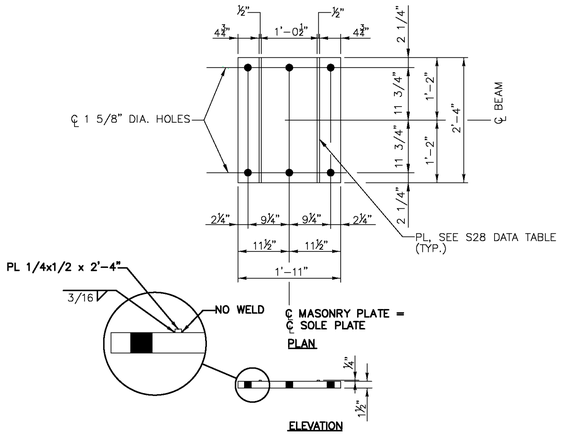

EXPANSION END MASONRY PLATE MK. MP-1E

SCALE: 3/4"= 1'-0"
(24 REQUIRED)
EST. WT. = 276 LB.

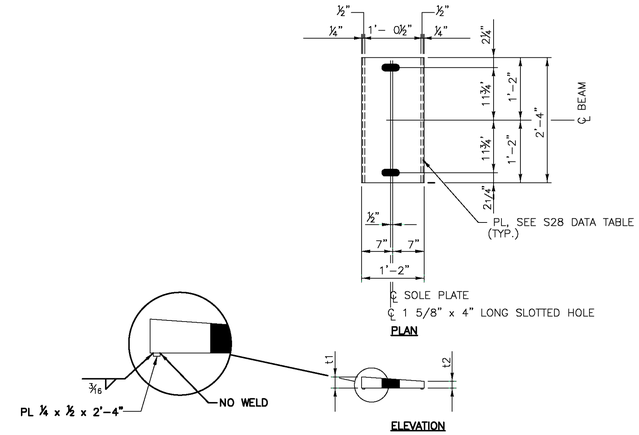

EXPANSION END SOLE PLATE MK. SP-"X"E1 AND SP-"X"E2

SCALE: 3/4"= 1'-0"
SEE DATA TABLE, SHEET S28 FOR EST. WEIGHT AND NUMBER REQUIRED

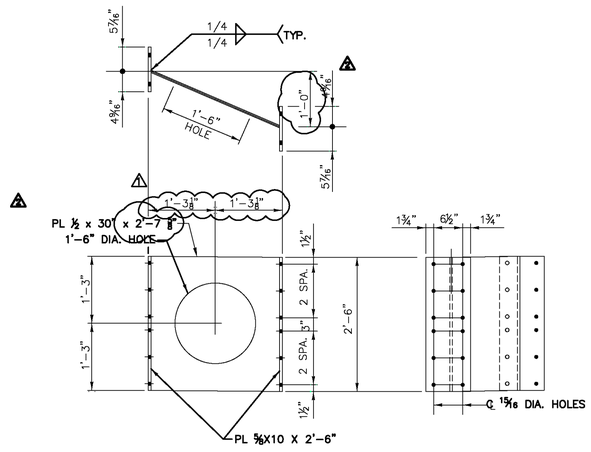

DIAPHRAGM MK. SD-2

SCALE: 3/4"= 1'-0"
EST. WT. = 244 LB. EACH

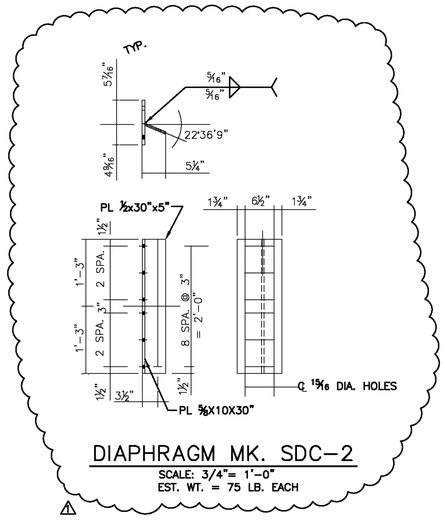

DIAPHRAGM MK. SDC-2

SCALE: 3/4"= 1'-0"
EST. WT. = 75 LB. EACH

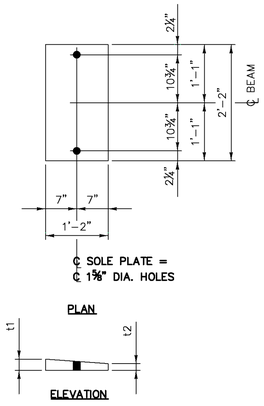

FIXED END SOLE PLATE MK. SP-"X"F1 AND SP-"X" F2

SCALE: 3/4"= 1'-0"
SEE DATA TABLE, SHEET S28 FOR EST. WEIGHT AND NUMBER REQUIRED

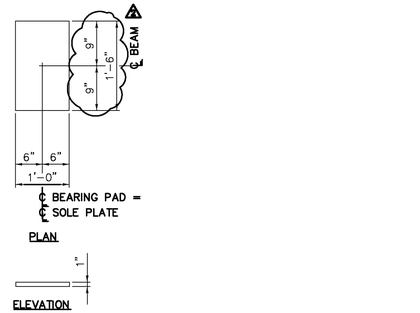

EXPANSION END BEARING PAD MK. BP-1E/BP-1F

SCALE: 3/4"= 1'-0"
60 DUROMETER NEOPRENE
(52 REQUIRED)

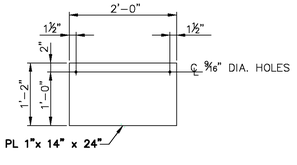

CONTACT PLATE MK. CP-1E DETAIL

SCALE: 3/4"= 1'-0"
(26 REQUIRED)
EST. WT. = 95.3 LB. EACH

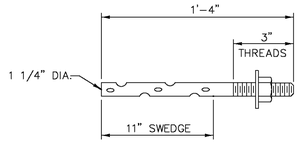

ANCHOR ROD MK. SAR-1

N.T.S.
EST. WT. = 6.6 LB. EACH
(104 REQUIRED)

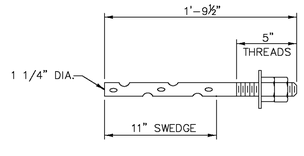

ANCHOR ROD MK. SAR-2

N.T.S.
EST. WT. = 9.3 LB. EACH
(52 REQUIRED)

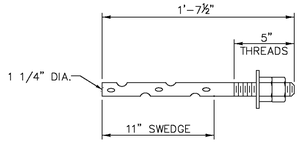

ANCHOR ROD MK. SAR-3

N.T.S.
EST. WT. = 8.6 LB. EACH
(52 REQUIRED)

ASBUILT

BID NO. 7185
COMPLETION DATE 03/25/2016
R.E. NAME BONAVENTURE EZEJI

NOTES:
1. FOR STRUCTURAL STEEL NOTES, SEE SHEET S3.
2. FOR THICKNESS (t), WEIGHT, AND QUANTITY REQUIRED ON SOLE PLATES, SEE TABLE, SHEET S37.

2'-0" 0'-0" 1'-0" 2'-0"
SCALE: 3/4"=1'-0"

UPRR BRIDGE 55.54 LOS ANGELES SUB

STRUCTURE SHEET NO. S29

DIGALERT
DIAL TOLL FREE 1-800-422-4133
AT LEAST TWO DAYS BEFORE YOU DIG
UNDERGROUND SERVICE ALERT OF SOUTHERN CALIFORNIA

MOFFATT & NICHOL
3780 KILROY AIRPORT WAY, SUITE 600
LONG BEACH, CALIFORNIA, 90806
562-426-9551

REGISTERED PROFESSIONAL ENGINEER — YONG DENG — NO. C65629 — EXP. 09/30/13 — CIVIL — STATE OF CALIFORNIA

MARK	REVISIONS	APPR.	DATE
⚠	AS BUILT		
⚠	ADDED SDC-2, REVISED SD-2 DIM AND ANCHOR ROD QTYS	YD	10/16/13

DESIGNED BY RW DRAWN BY TP CHECKED BY MSN

CITY OF RIVERSIDE, CALIFORNIA
PUBLIC WORKS DEPARTMENT
RIVERSIDE AVE UNDERPASS
BEAM SPAN PIECE MARK DETAILS
HORIZ. SCALE: AS SHOWN VERT. SCALE: AS SHOWN

ACCT. NO. -
W.O. NO. -
R-4240
SHEET 115 OF 146
FILE NO.

DRAWING NAME: \\retroplot02\lb_projects\6318 its13\CADD\Sheet\STRUCTURE\635501S029_Addendum1.dwg
PLOT DATE: Sep 27, 2016 - 9:31am PLOTTED BY: dleigh

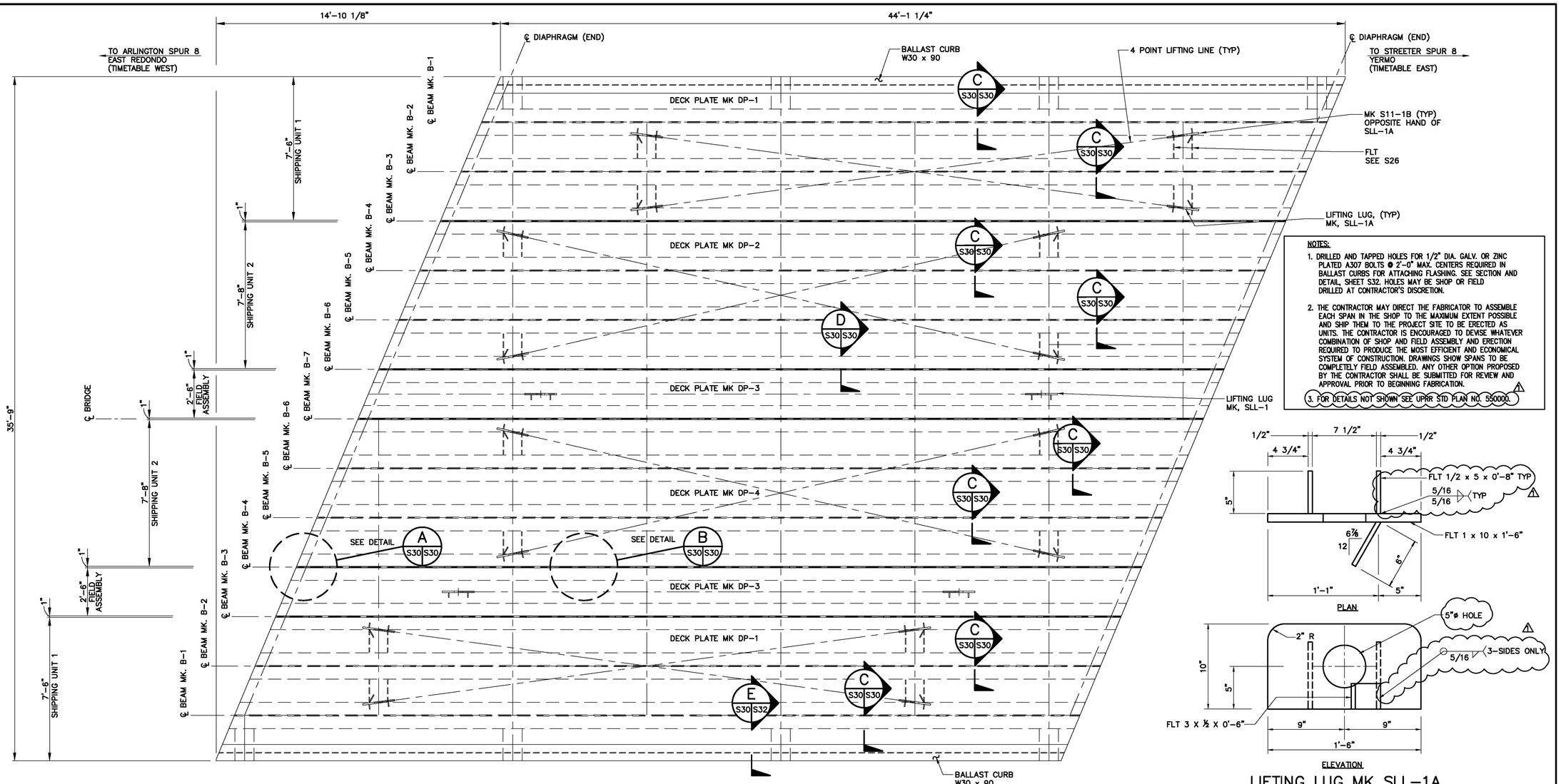

DECK PLATE LAYOUT

SCALE: 3/8"= 1'-0"

NOTE:
LIFTING LUG TO BE IN LINE WITH DIAPHRAGMS AS SHOWN.

NOTES:

1. DRILLED AND TAPPED HOLES FOR 1/2" DIA. GALV. OR ZINC PLATED A307 BOLTS @ 2'-0" MAX. CENTERS REQUIRED IN BALLAST CURBS FOR ATTACHING FLASHING. SEE SECTION AND DETAIL, SHEET S32. HOLES MAY BE SHOP OR FIELD DRILLED AT CONTRACTOR'S DISCRETION.
2. THE CONTRACTOR MAY DIRECT THE FABRICATOR TO ASSEMBLE EACH SPAN IN THE SHOP TO THE MAXIMUM EXTENT POSSIBLE AND SHIP THEM TO THE PROJECT SITE TO BE ERECTED AS UNITS. THE CONTRACTOR IS ENCOURAGED TO DEVISE WHATEVER COMBINATION OF SHOP AND FIELD ASSEMBLY AND ERECTION REQUIRED TO PRODUCE THE MOST EFFICIENT AND ECONOMICAL SYSTEM OF CONSTRUCTION. DRAWINGS SHOW SPANS TO BE COMPLETELY FIELD ASSEMBLED. ANY OTHER OPTION PROPOSED BY THE CONTRACTOR SHALL BE SUBMITTED FOR REVIEW AND APPROVAL PRIOR TO BEGINNING FABRICATION.
3. FOR DETAILS NOT SHOWN SEE UPRR STD PLAN NO. 550000.

LIFTING LUG MK SLL-1A

NO SCALE

LIFTING LUG MK SLL-1

NO SCALE

(SLL-1A SHOWN, SLL-1B MIRRORED)

DETAIL A

SCALE: 1"=1'-0"

DETAIL B

SCALE: 1"=1'-0"

SECTION C

SCALE: 3" = 1'-0"

SECTION D

SCALE: 3" = 1'-0"

*FLT NOT SHOWN

ASBUILT

BID NO. 7185

COMPLETION DATE 03/25/2016

R.E. NAME BONAVENTURE EZEJI

DIGALERT
DIAL TOLL FREE
1-800-422-4133
AT LEAST TWO DAYS BEFORE YOU DIG
UNDERGROUND SERVICE ALERT OF SOUTHERN CALIFORNIA

MOFFATT & NICHOL
3780 KILROY AIRPORT WAY, SUITE 600
LONG BEACH, CALIFORNIA, 90806
562-426-9551

DATE

REGISTERED PROFESSIONAL ENGINEER
YONG DENG
NO. C65629
EXP. 09/30/13
CIVIL
STATE OF CALIFORNIA

MARK	REVISIONS	APPR.	DATE
1	ADDED FLT DETAILS, REVISED SLL-1A AND NOTES	YD	10/16/13

DESIGNED BY RW DRAWN BY TP CHECKED BY MSN

UPRR BRIDGE 55.54 LOS ANGELES SUB

CITY OF RIVERSIDE, CALIFORNIA
PUBLIC WORKS DEPARTMENT

RIVERSIDE AVE UNDERPASS

DECK PLATE LAYOUT

HORIZ. SCALE: AS SHOWN VERT. SCALE: AS SHOWN

STRUCTURE SHEET NO. S30

ACCT. NO. -
W.O. NO. -

R-4240

SHEET 116 OF 146

FILE NO.

DRAWING NAME: \\netapp102\lb_projects\8318 lb13\CADD\Sheet\STRUCTURE\83550150D30_Addendum1.dwg
PLOT DATE: Sep 27, 2016 - 9:31am PLOTTED BY: dhegh

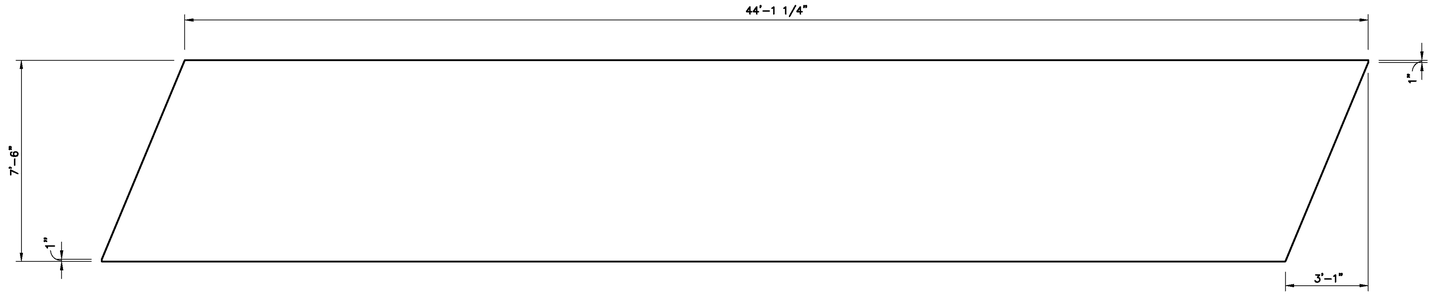

DECK PLATE MK DP-1
SCALE: 3/8"= 1'-0"

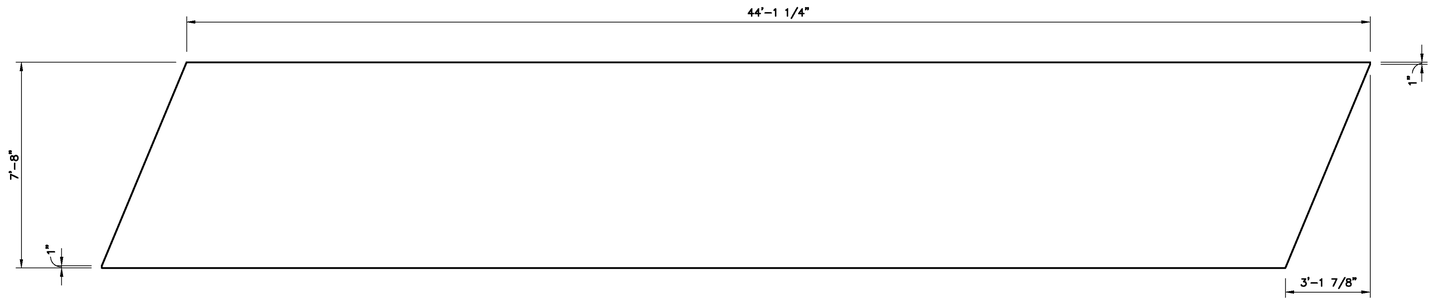

DECK PLATE MK DP-2
SCALE: 3/8"= 1'-0"

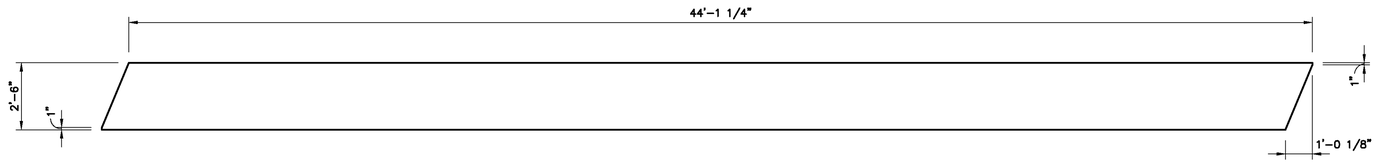

DECK PLATE MK DP-3
SCALE: 3/8"= 1'-0"

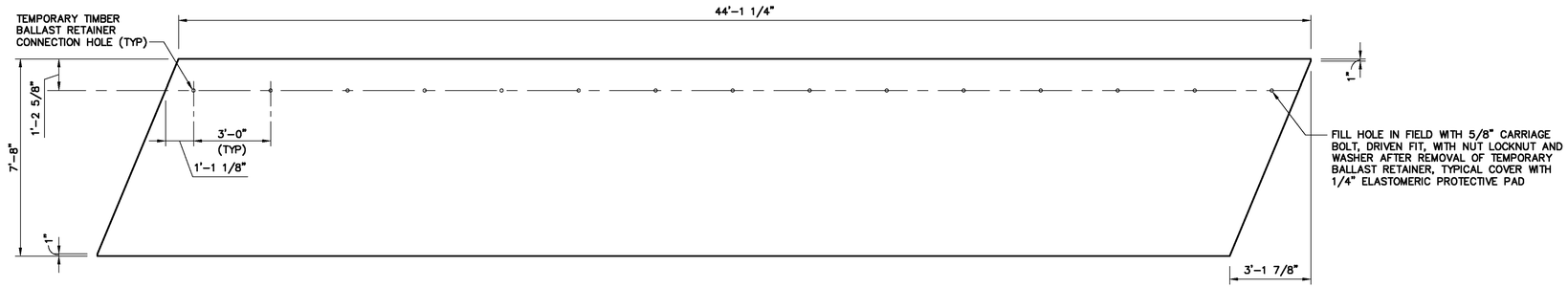

DECK PLATE MK DP-4
SCALE: 3/8"= 1'-0"

ASBUILT

BID NO. 7185

COMPLETION DATE 03/25/2016

R.E. NAME BONAVENTURE EZEJI

4'-0" 0'-0" 2'-0" 4'-0"
SCALE: 3/8"=1'-0"

DIGALERT
DIAL TOLL FREE
1-800-422-4133
AT LEAST TWO DAYS BEFORE YOU DIG
UNDERGROUND SERVICE ALERT OF SOUTHERN CALIFORNIA

MOFFATT & NICHOL
3780 KILROY AIRPORT WAY, SUITE 600
LONG BEACH, CALIFORNIA, 90806
562-426-9551

DATE _____

REGISTERED PROFESSIONAL ENGINEER
YONG DENG
NO. C65629
EXP. 09/30/13
CIVIL
STATE OF CALIFORNIA

MARK	REVISIONS	APPR.	DATE

DESIGNED BY RW DRAWN BY TP CHECKED BY MSN

UPRR BRIDGE 55.54 LOS ANGELES SUB

CITY OF RIVERSIDE, CALIFORNIA
PUBLIC WORKS DEPARTMENT

RIVERSIDE AVE UNDERPASS

DECK PLATE DETAILS

HORIZ. SCALE: AS SHOWN VERT. SCALE: AS SHOWN

STRUCTURE SHEET NO. S31
ACCT. NO. -
W.O. NO. -
R-4240
SHEET 117 OF 146
FILE NO.

DRAWING NAME: \\retopplb02\lb_projects\6318 lts13\CADD\Sheet\STRUCTURE\635501S031.dwg
PLOT DATE: Sep 27, 2016 - 9:31am PLOTTED BY: dleigh

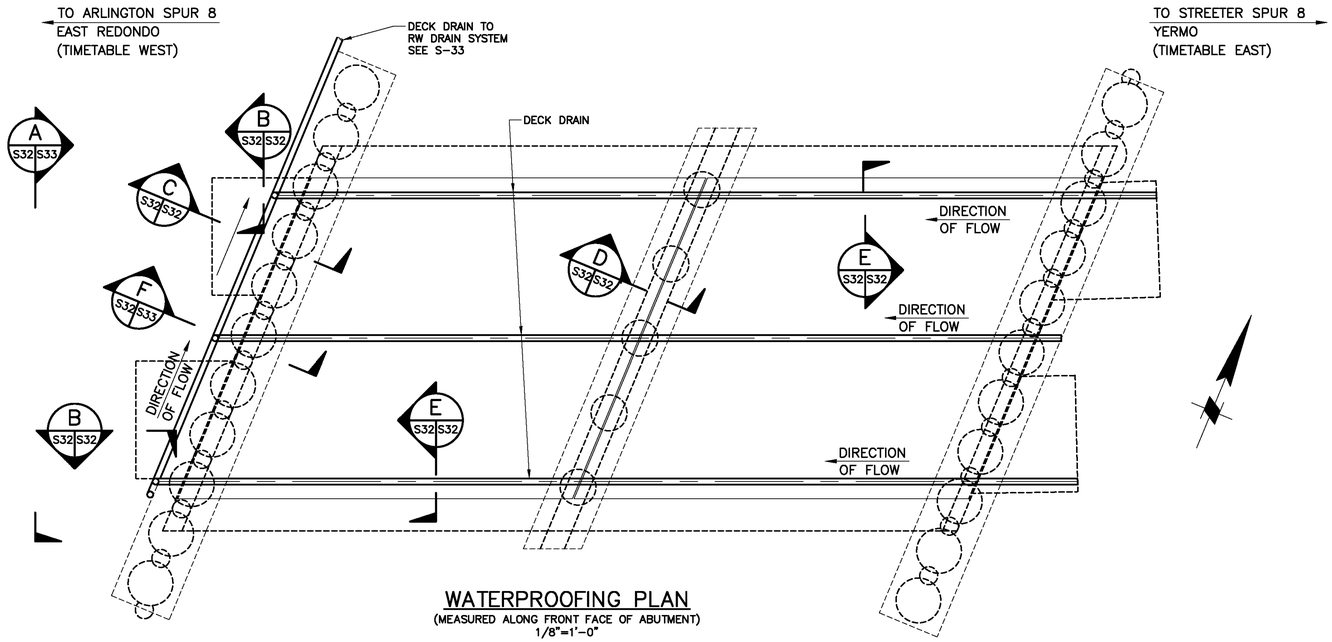

WATERPROOFING PLAN

(MEASURED ALONG FRONT FACE OF ABUTMENT)
1/8"=1'-0"

WATERPROOFING NOTES:

1. ENTIRE DECK AND APPROACH SLABS SHALL BE WATERPROOFED PER NOTES AND DETAILS, THIS SHEET.
2. THE CONTRACTOR SHALL SUBMIT A DRAWING TO THE CITY OF RIVERSIDE AND UPRR SHOWING THE LAYOUT OF THE WATERPROOFING MEMBRANE AND EACH LAYER OF THE ASPHALT SHEETS. THE LAYOUTS ARE SUBJECT TO THE APPROVAL OF THE CITY AND UPRR.
3. FILL GAPS BETWEEN DECK PLATES AND HOLES IN DECK PLATES WITH MASTIC PRIOR TO INSTALLING WATERPROOFING MEMBRANE.
4. APPLY ADHESIVE TO THE ENTIRE DECK, APPROACH SLABS, AND APPLICABLE PORTIONS OF CURBS AT THE RATE OF ONE GALLON PER HUNDRED SQ. FT. PRIOR TO INSTALLING THE WATERPROOFING MEMBRANE. DO NOT APPLY ADHESIVE AS DETAILED AT THE JOINTS BETWEEN SPANS AND AT THE ABUTMENT BACKWALL. OVERLAP THE ENDS OF THE WATERPROOFING MEMBRANE AS DETAILED.
5. THE ASPHALT SHEETS ARE TO BE PLACED OVER THE WATERPROOFING MEMBRANE. BOND THE BOTTOM LAYER OF ASPHALT SHEETS TO THE WATERPROOFING MEMBRANE AND THE TOP LAYER OF ASPHALT SHEETS TO THE BOTTOM LAYER WITH ADHESIVE, APPLYING IT AT THE SAME RATE AND MANNER AS INDICATED FOR THE WATERPROOFING. DO NOT APPLY ADHESIVE TO THE ASPHALT SHEETS AS DETAILED AT THE JOINTS BETWEEN SPANS AND AT THE ABUTMENT BACKWALLS. STAGGER JOINTS BETWEEN LAYERS OF ASPHALT SHEETS A MINIMUM OF 6" SO THAT NO JOINT IN THE TOP LAYER COINCIDES WITH A JOINT IN THE BOTTOM LAYER.
6. CAUTION – ADHESIVE IS EXTREMELY FLAMMABLE. DO NOT EXPOSE TO OPEN FLAME OR SPARKS FROM GRINDING OR WELDING.
7. IMMEDIATELY FOLLOWING ACCEPTANCE OF THE WATERPROOFING, THE CONTRACTOR SHALL PLACE BALLAST TO A MINIMUM DEPTH OF 6". THE BALLAST IS TO BE FURNISHED BY THE RAILROAD. IN PLACING THE BALLAST, MEANS SHALL BE EMPLOYED SO AS TO NOT DAMAGE THE ASPHALT SHEETS OR WATERPROOFING MEMBRANE.

SECTION B (S32 S32)
SCALE: 1 1/2" = 1'-0"

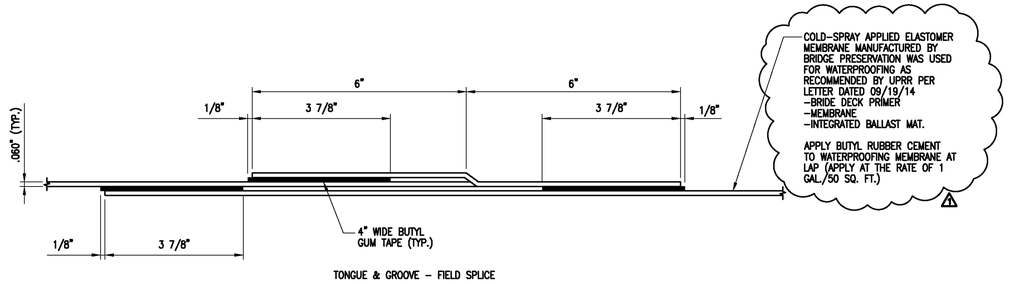

TONGUE & GROOVE – FIELD SPLICE

BUTYL RUBBER OR EPDM WATERPROOFING SPLICE DETAIL

NTS

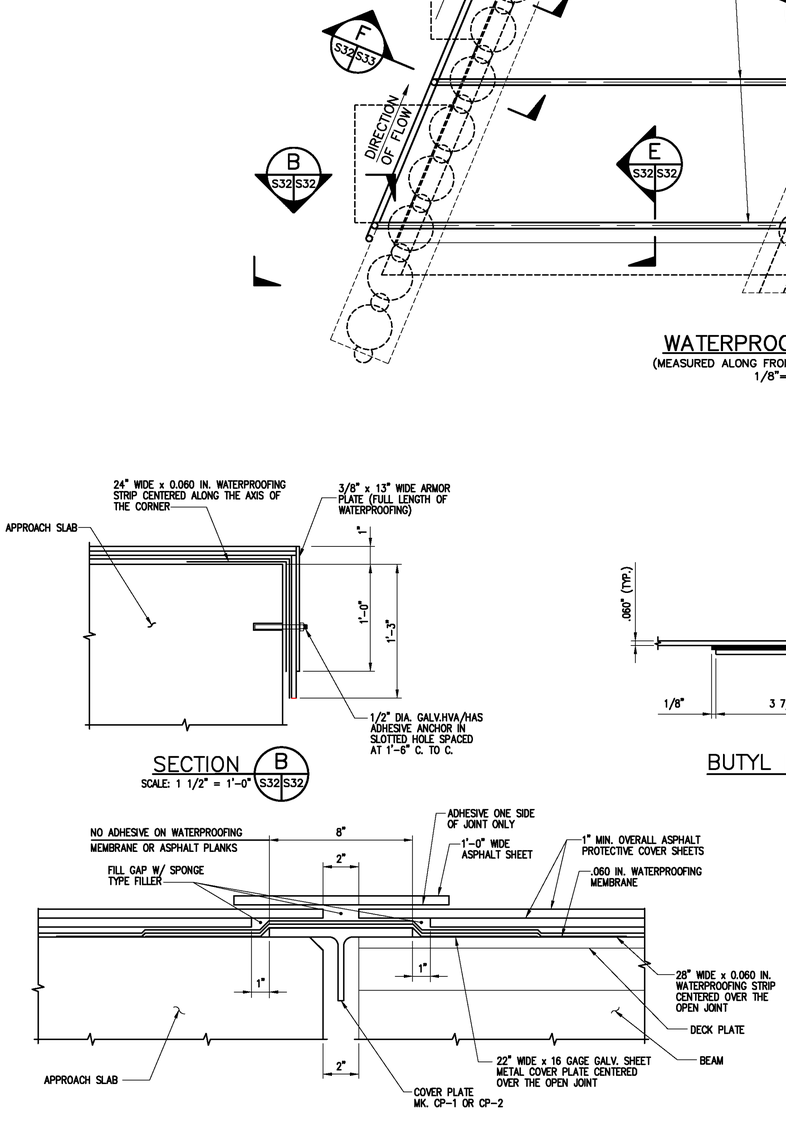

SECTION C (S32 S32)
SCALE: 3" = 1'-0"

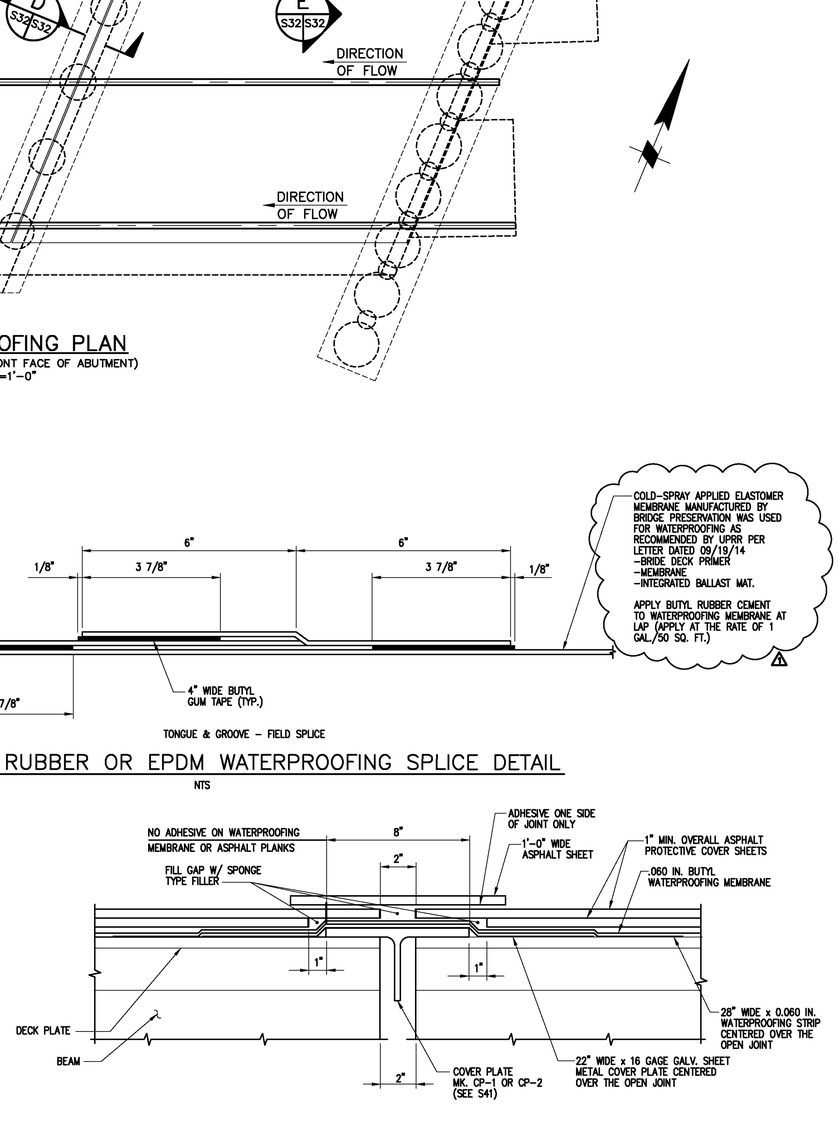

SECTION D (S32 S32)
SCALE: 3" = 1'-0"

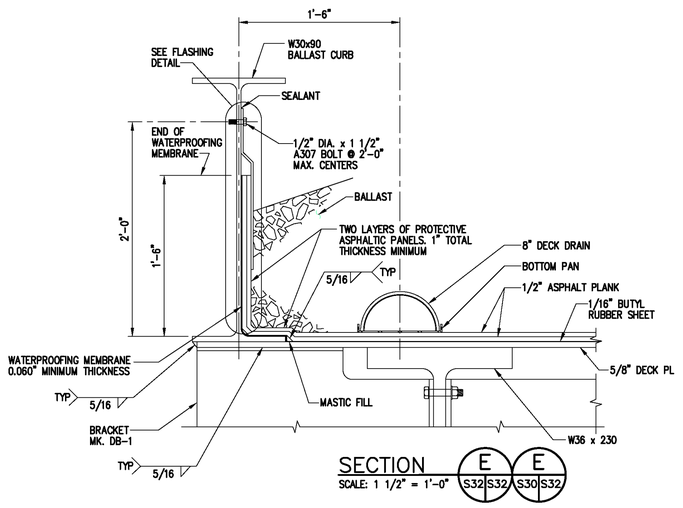

SECTION E (S32 S32 S30 S32)
SCALE: 1 1/2" = 1'-0"

NOTES:

1. ALL STRUCTURAL STEEL PLATES, BOLTS AND WASHERS SHALL BE GALVANIZED.
2. DISCONTINUE FLASHING AT BENT AND ABUTMENT GAPS IN STEEL BALLAST CURB. LEAVE MIN. 1" GAP BETWEEN ADJACENT PIECES OF FLASHING.

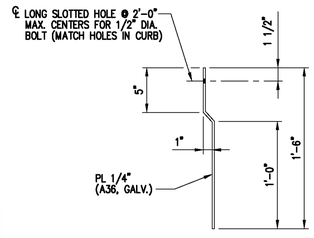

CURB FLASHING DETAIL

SCALE: 1 1/2" = 1'-0"
(EST. WT.=15.3 LB/FT)

ASBUILT

BID NO. 7185
COMPLETION DATE 03/25/2016
R.E. NAME BONAVENTURE EZEJI

1'-0" 0'-0" 6" 1'-0"
SCALE: 1 1/2"=1'-0"

8'-0" 0'-0" 8'-0" 16'-0"
SCALE: 1/8"=1'-0"

6" 0'-0" 3" 6"
SCALE: 3"=1'-0"

DIGALERT
DIAL TOLL FREE
1-800-422-4133
AT LEAST TWO DAYS BEFORE YOU DIG
UNDERGROUND SERVICE ALERT OF SOUTHERN CALIFORNIA

MOFFATT & NICHOL
3780 KILROY AIRPORT WAY, SUITE 600
LONG BEACH, CALIFORNIA, 90806
562-426-9551

DATE _____

REGISTERED PROFESSIONAL ENGINEER
YONG DENG
NO. C65629
EXP. 09/30/13
CIVIL
STATE OF CALIFORNIA

MARK	REVISIONS	APPR.	DATE
⚠	AS BUILT		

DESIGNED BY RW DRAWN BY TP CHECKED BY MSN

UPRR BRIDGE 55.54 LOS ANGELES SUB

CITY OF RIVERSIDE, CALIFORNIA
PUBLIC WORKS DEPARTMENT

RIVERSIDE AVE UNDERPASS

WATERPROOFING AND DRAINAGE DETAILS (1 OF 2)

HORIZ. SCALE: AS SHOWN VERT. SCALE: AS SHOWN

STRUCTURE SHEET NO. S32
ACCT. NO. –
W.O. NO. –
R-4240
SHEET 118 OF 146
FILE NO.

DRAWING NAME: \\ntoppb02\lb_projects\8318 lb13\CADD\Sheet\STRUCTURE\835501S032.dwg
PLOT DATE: Sep 27, 2016 - 9:31am PLOTTED BY: dleigh

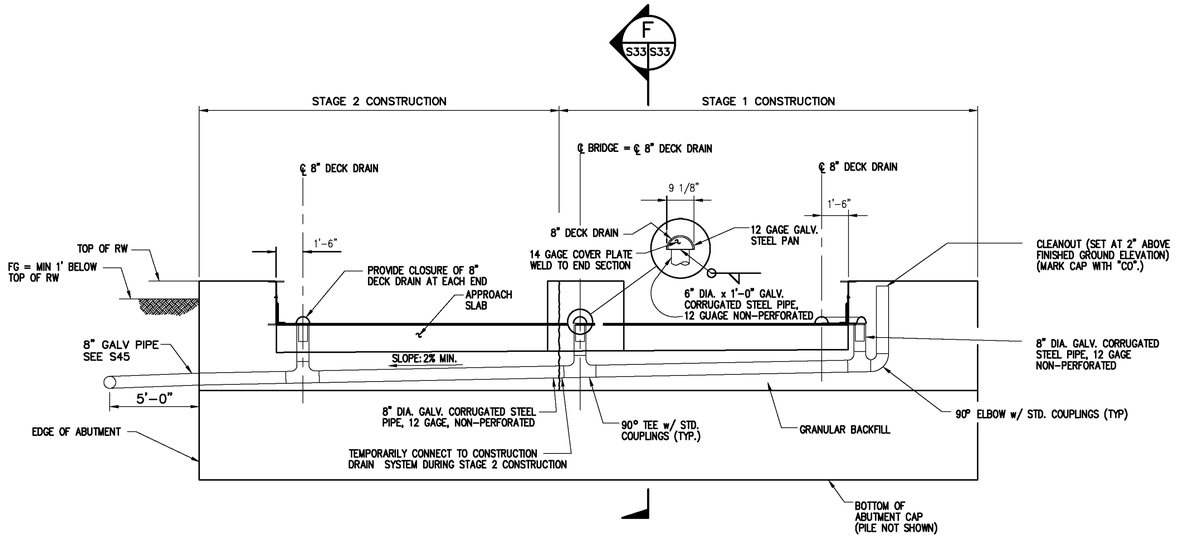

VIEW A
S32 S33

SCALE: NTS

(LOOKING BEHIND ABUT #1 TO UPSTATION)

NOTE:

1. PROVIDE A RODENT SCREEN WHERE 8" DIA. GALV. STEEL PIPE DAYLIGHTS.
2. SEE S45 FOR DETAILS NOT SHOWN

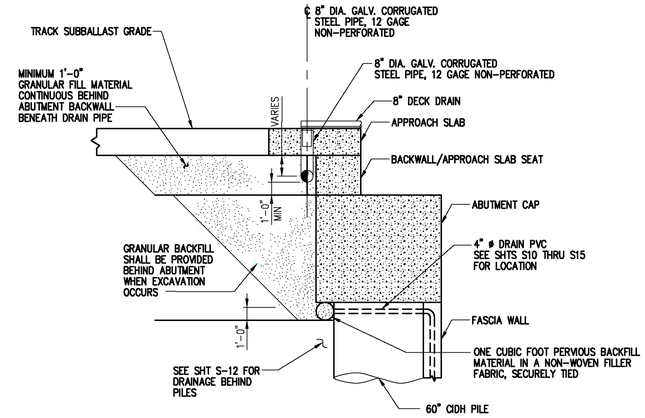

SECTION F F
S32 S33 S33 S33

SCALE: NTS

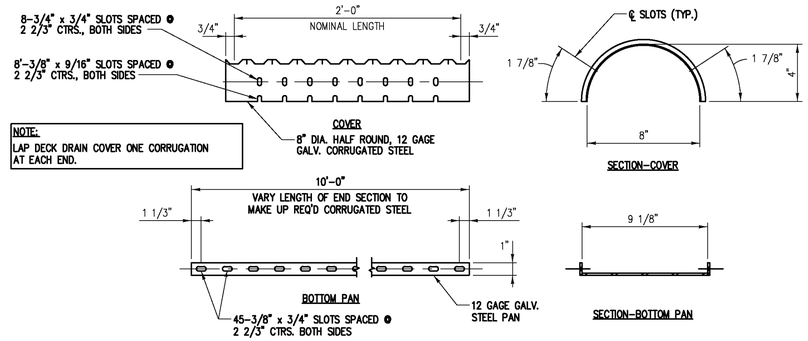

8" DECK DRAIN DETAILS

NTS

ASBUILT

BID NO. 7185

COMPLETION DATE 03/25/2016

R.E. NAME BONAVENTURE EZEJI

DRAWING NAME: \\retroplib02\lb_projects\6318 lb13\CADD\Sheet\STRUCTURE\635501S033.dwg
PLOT DATE: Sep 27, 2016 - 2:51pm PLOTTED BY: dleigh

DIGALERT
DIAL TOLL FREE
1-800-422-4133
AT LEAST TWO DAYS BEFORE YOU DIG
UNDERGROUND SERVICE ALERT OF SOUTHERN CALIFORNIA

MOFFATT & NICHOL
3780 KILROY AIRPORT WAY, SUITE 600
LONG BEACH, CALIFORNIA, 90806
562-426-9551

DATE _____

REGISTERED PROFESSIONAL ENGINEER
YONG DENG
NO. C65629
EXP. 09/30/13
CIVIL
STATE OF CALIFORNIA

MARK	REVISIONS	APPR.	DATE
1	REVISED DECK DRAIN DIMENSIONS	YD	5/6/14

DESIGNED BY RW DRAWN BY TP CHECKED BY MSN

UPRR BRIDGE 55.54 LOS ANGELES SUB

CITY OF RIVERSIDE, CALIFORNIA
PUBLIC WORKS DEPARTMENT

RIVERSIDE AVE UNDERPASS

WATERPROOFING AND DRAINAGE DETAILS (2 OF 2)

HORIZ. SCALE: AS SHOWN VERT. SCALE: AS SHOWN

STRUCTURE SHEET NO. S33

ACCT. NO. -
W.O. NO. -

R-4240

SHEET 119 OF 146

FILE NO.

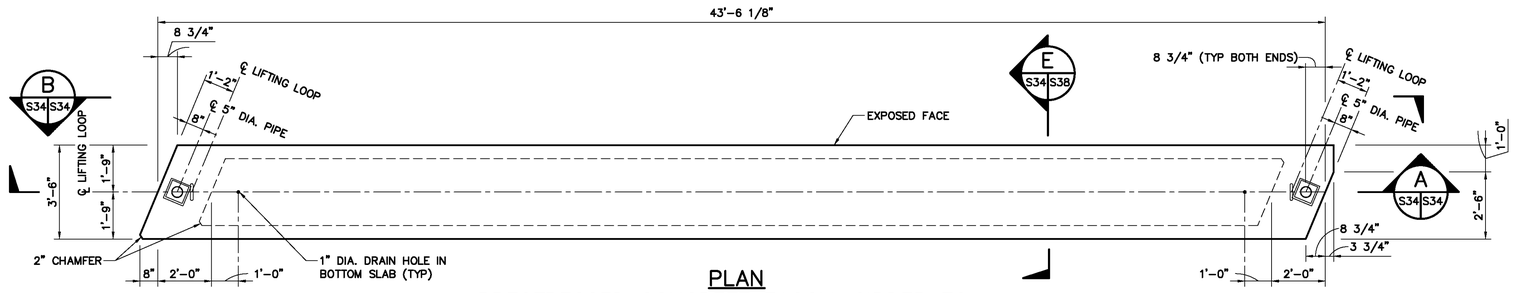

PLAN

PRESTRESSED CONCRETE FASCIA GIRDER FG-1

3/8"=1'-0"

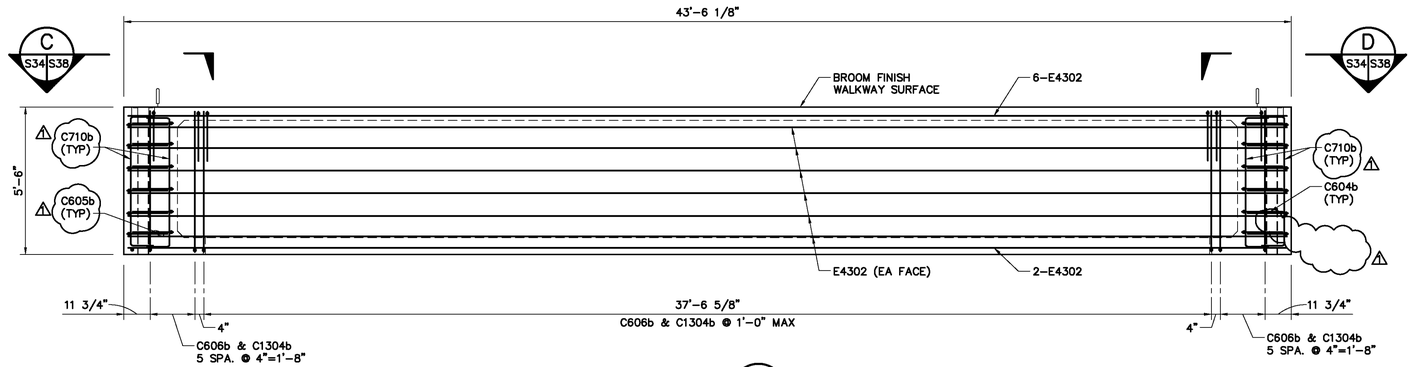

SECTION A

3/8"=1'-0" S34 S34

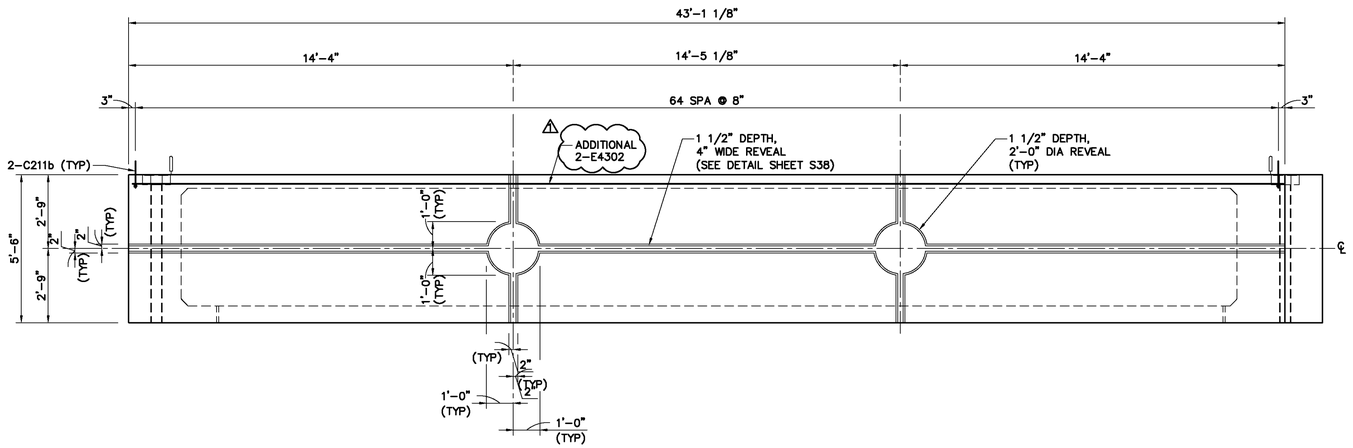

ELEVATION B

3/8"=1'-0" S34 S34

(SHOWING EXPOSED FACE)

EST. WT. OF PRESTRESSED CONC. FASCIA GIRDER
MK. FG-1 = 62.20 KIPS (31.1 TONS)

NOTES:

1. FOR NOTES, DETAILS AND MATERIAL SCHEDULE, SEE SHEET S38.
2. FOR SECTIONS, SEE SHEET S38.
3. FOR REINFORCING SCHEDULE, SEE SHEET S38.

ASBUILT

BID NO. 7185

COMPLETION DATE 03/25/2016

R.E. NAME BONAVENTURE EZEJI

4'-0" 0'-0" 2'-0" 4'-0"

SCALE: 3/8"=1'-0"

DIGALERT

DIAL TOLL FREE 1-800-422-4133 AT LEAST TWO DAYS BEFORE YOU DIG

UNDERGROUND SERVICE ALERT OF SOUTHERN CALIFORNIA

MOFFATT & NICHOL
3780 KILROY AIRPORT WAY, SUITE 600
LONG BEACH, CALIFORNIA, 90806
562-426-9551

DATE

REGISTERED PROFESSIONAL ENGINEER — YONG DENG — NO. C65629 — EXP. 09/30/13 — CIVIL — STATE OF CALIFORNIA

MARK	REVISIONS	APPR.	DATE
⚠	REVISED DETAIL NOTES	YD	10/28/13

DESIGNED BY RW DRAWN BY TP CHECKED BY MSN

UPRR BRIDGE 55.54 LOS ANGELES SUB

CITY OF RIVERSIDE, CALIFORNIA
PUBLIC WORKS DEPARTMENT

RIVERSIDE AVE UNDERPASS

PRESTRESSED CONCRETE FASCIA GIRDER DETAILS (1 OF 6)

HORIZ. SCALE: AS SHOWN VERT. SCALE: AS SHOWN

STRUCTURE SHEET NO. S34

ACCT. NO. -
W.O. NO. -

R-4240

SHEET 120 OF 146

FILE NO.

DRAWING NAME: \\netapp102\lb_projects\1318 lb13\CADD\Sheet\STRUCTURE\9355015034_Addendum1.dwg
PLOT DATE: Sep 27, 2016 - 9:31am PLOTTED BY: dleigh

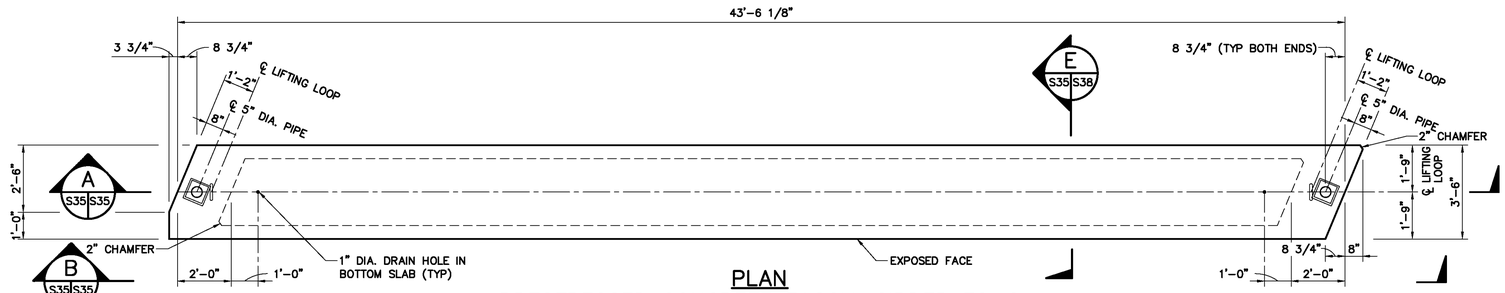

PLAN
PRESTRESSED CONCRETE FASCIA GIRDER FG-2
3/8"=1'-0"

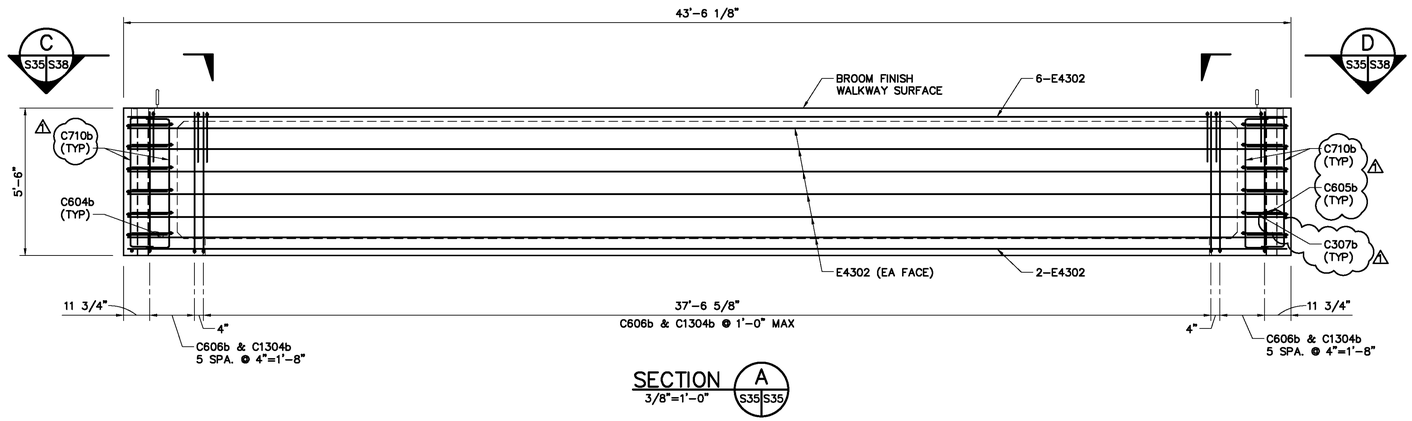

SECTION A S35 S35
3/8"=1'-0"

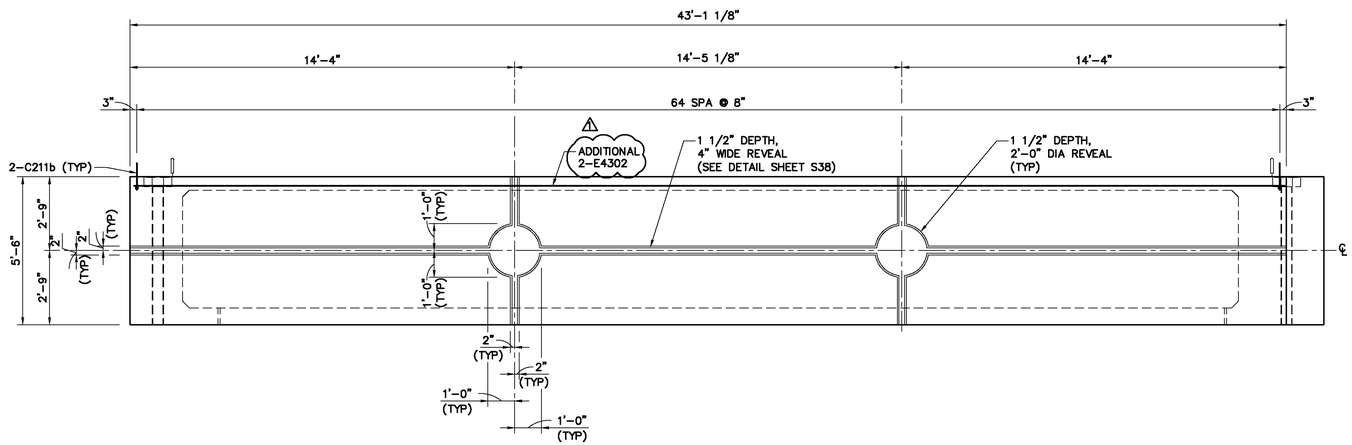

ELEVATION B S35 S35
3/8"=1'-0"
(SHOWING EXPOSED FACE)

EST. WT. OF PRESTRESSED CONC. FASCIA GIRDER
MK. FG-2 = 62.20 KIPS (31.1 TONS)

NOTES:
1. FOR NOTES, DETAILS AND MATERIAL SCHEDULE, SEE SHEET S38.
2. FOR SECTIONS, SEE SHEET S38.
3. FOR REINFORCING SCHEDULE, SEE SHEET S38.

ASBUILT
BID NO. 7185
COMPLETION DATE 03/25/2016
R.E. NAME BONAVENTURE EZEJI

4'-0" 0'-0" 2'-0" 4'-0"
SCALE: 3/8"=1'-0"

DIGALERT
DIAL TOLL FREE
1-800-422-4133
AT LEAST TWO DAYS BEFORE YOU DIG
UNDERGROUND SERVICE ALERT OF SOUTHERN CALIFORNIA

MOFFATT & NICHOL
3780 KILROY AIRPORT WAY, SUITE 600
LONG BEACH, CALIFORNIA, 90806
562-426-9551

DATE

REGISTERED PROFESSIONAL ENGINEER
YONG DENG
NO. C65629
EXP. 09/30/13
CIVIL
STATE OF CALIFORNIA

MARK	REVISIONS	APPR.	DATE
⚠	REVISED DETAIL NOTES	YD	10/28/13

DESIGNED BY RW DRAWN BY TP CHECKED BY MSN

UPRR BRIDGE 55.54 LOS ANGELES SUB

CITY OF RIVERSIDE, CALIFORNIA
PUBLIC WORKS DEPARTMENT

RIVERSIDE AVE UNDERPASS

PRESTRESSED CONCRETE FASCIA GIRDER DETAILS (2 OF 6)

HORIZ. SCALE: AS SHOWN VERT. SCALE: AS SHOWN

STRUCTURE SHEET NO. S35
ACCT. NO. -
W.O. NO. -
R-4240
SHEET 121 OF 146
FILE NO.

DRAWING NAME: \\netapp\ip02\lb_projects\8318 lb13\CADD\Sheet\STRUCTURE\8355013S035_Addendum1.dwg
PLOT DATE: Sep 27, 2016 - 8:31am PLOTTED BY: dleigh

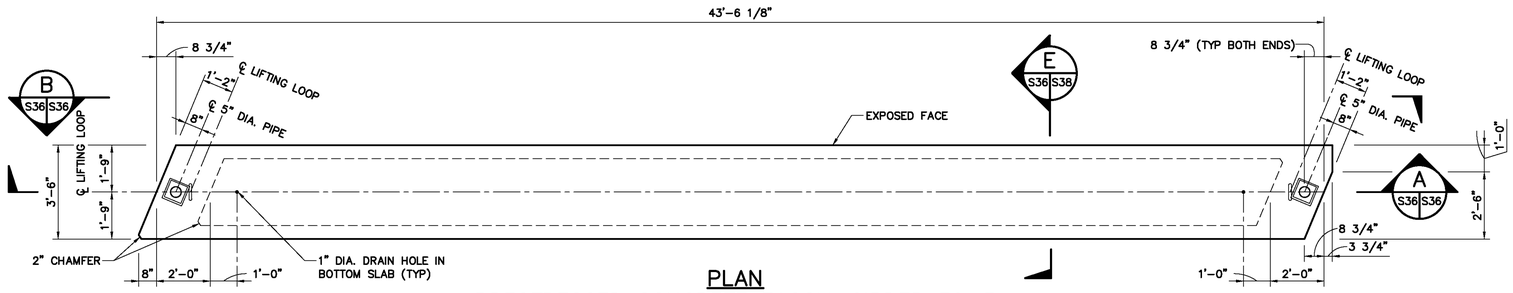

PLAN

PRESTRESSED CONCRETE FASCIA GIRDER FG-3

3/8"=1'-0"

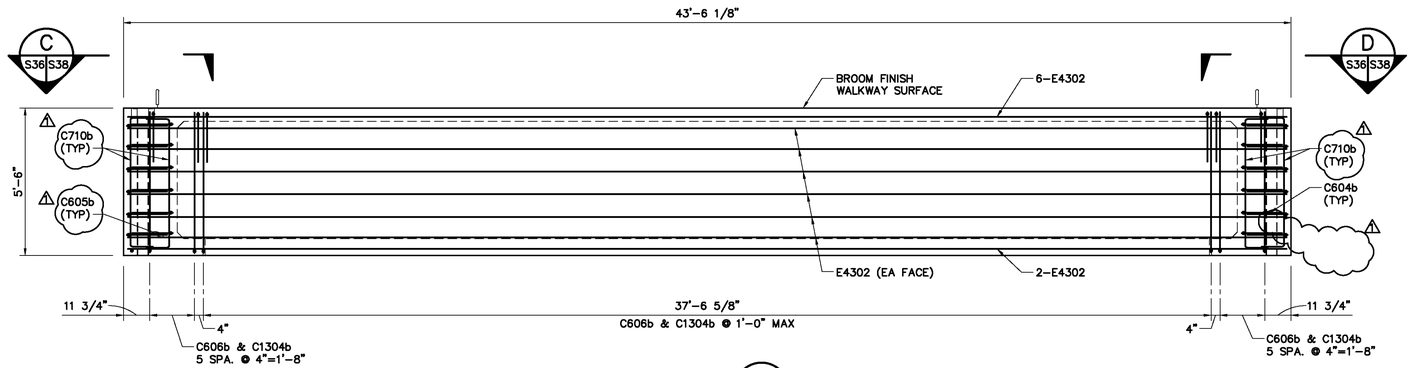

SECTION A

3/8"=1'-0"

S36 S36

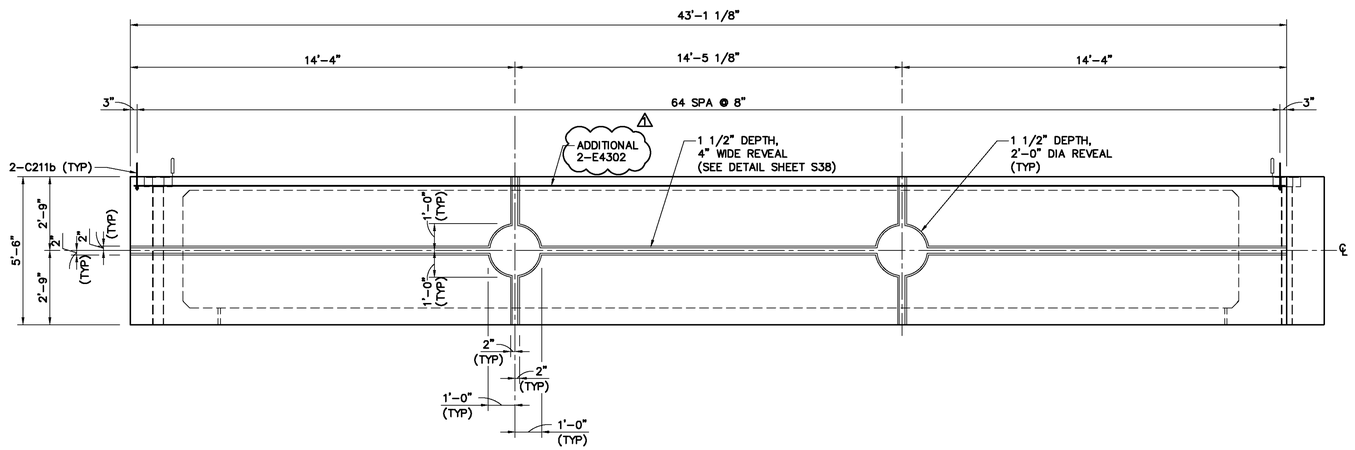

ELEVATION B

3/8"=1'-0"

S36 S36

(SHOWING EXPOSED FACE)

EST. WT. OF PRESTRESSED CONC. FASCIA GIRDER
MK. FG-3 = 62.20 KIPS (31.1 TONS)

NOTES:

1. FOR NOTES, DETAILS AND MATERIAL SCHEDULE, SEE SHEET S38.
2. FOR SECTIONS, SEE SHEET S38.
3. FOR REINFORCING SCHEDULE, SEE SHEET S38.

ASBUILT

BID NO. 7185

COMPLETION DATE 03/25/2016

R.E. NAME BONAVENTURE EZEJI

4'-0" 0'-0" 2'-0" 4'-0"

SCALE: 3/8"=1'-0"

DIGALERT

DIAL TOLL FREE 1-800-422-4133 AT LEAST TWO DAYS BEFORE YOU DIG

UNDERGROUND SERVICE ALERT OF SOUTHERN CALIFORNIA

MOFFATT & NICHOL

3780 KILROY AIRPORT WAY, SUITE 600
LONG BEACH, CALIFORNIA, 90806
562-426-9551

DATE

REGISTERED PROFESSIONAL ENGINEER
YONG DENG
NO. C65629
EXP. 09/30/13
CIVIL
STATE OF CALIFORNIA

MARK	REVISIONS	APPR.	DATE
⚠	REVISED DETAIL NOTES	YD	10/28/13

DESIGNED BY RW DRAWN BY TP CHECKED BY MSN

UPRR BRIDGE 55.54 LOS ANGELES SUB

CITY OF RIVERSIDE, CALIFORNIA
PUBLIC WORKS DEPARTMENT

RIVERSIDE AVE UNDERPASS

PRESTRESSED CONCRETE FASCIA GIRDER DETAILS (3 OF 6)

HORIZ. SCALE: AS SHOWN VERT. SCALE: AS SHOWN

STRUCTURE SHEET NO. S36

ACCT. NO. -
W.O. NO. -

R-4240

SHEET 122 OF 146

FILE NO.

DRAWING NAME: \\netapp1p02\lb_projects\8318 lb13\CADD\Sheet\STRUCTURE\63550150S36_Addendum1.dwg
PLOT DATE: Sep 27, 2016 - 8:31am PLOTTED BY: dleigh

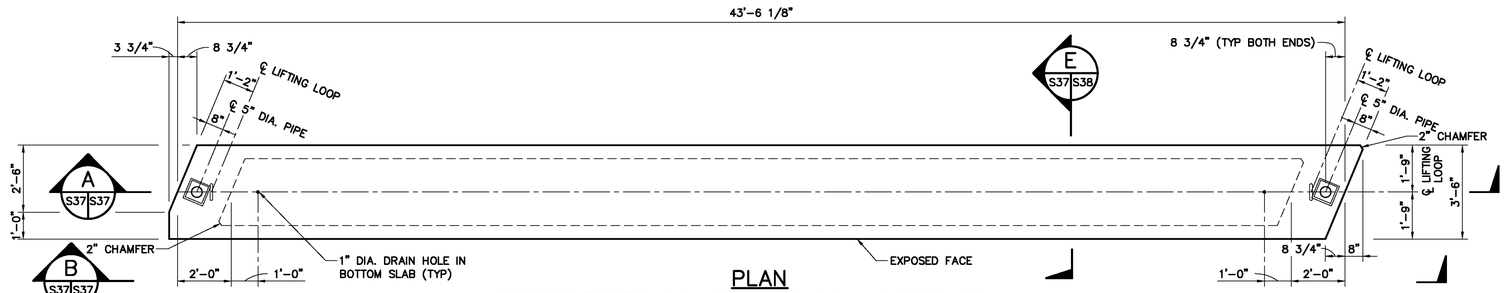

PLAN
PRESTRESSED CONCRETE FASCIA GIRDER FG-4
3/8"=1'-0"

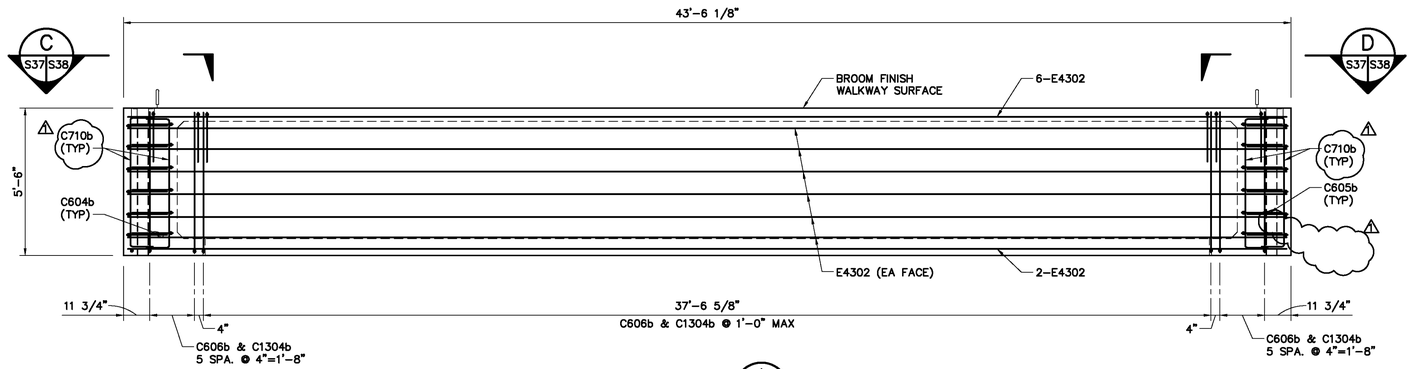

SECTION
3/8"=1'-0"

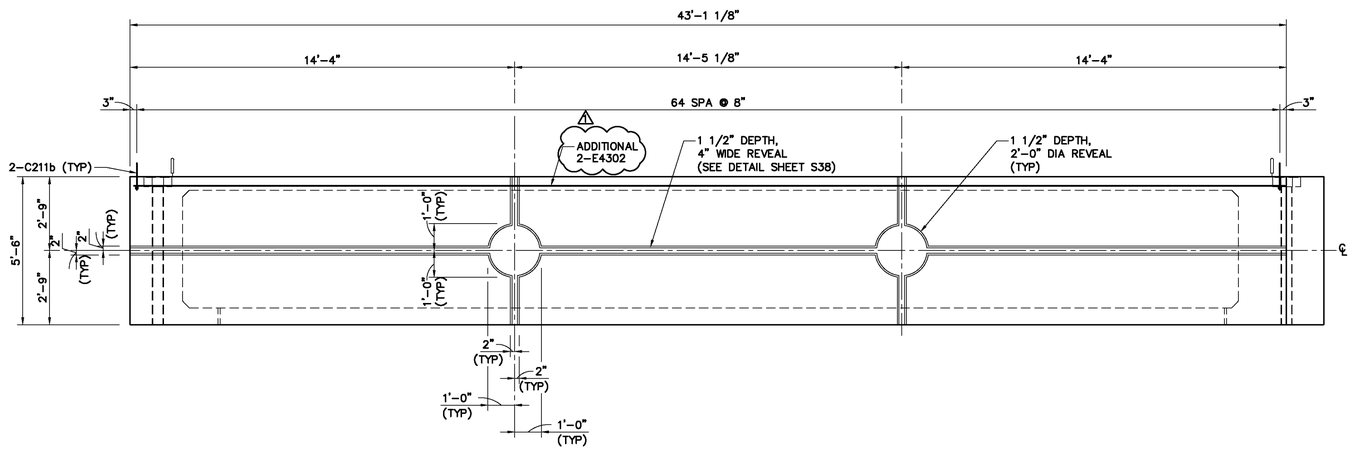

ELEVATION
3/8"=1'-0"
(SHOWING EXPOSED FACE)

EST. WT. OF PRESTRESSED CONC. FASCIA GIRDER
MK. FG-4 = 62.20 KIPS (31.1 TONS)

NOTES:
1. FOR NOTES, DETAILS AND MATERIAL SCHEDULE, SEE SHEET S38.
2. FOR SECTIONS, SEE SHEET S38.
3. FOR REINFORCING SCHEDULE, SEE SHEET S38.

ASBUILT
BID NO. 7185
COMPLETION DATE 03/25/2016
R.E. NAME BONAVENTURE EZEJI

4'-0" 0'-0" 2'-0" 4'-0"
SCALE: 3/8"=1'-0"

DIGALERT
DIAL TOLL FREE
1-800-422-4133
AT LEAST TWO DAYS BEFORE YOU DIG
UNDERGROUND SERVICE ALERT OF SOUTHERN CALIFORNIA

MOFFATT & NICHOL
3780 KILROY AIRPORT WAY, SUITE 600
LONG BEACH, CALIFORNIA, 90806
562-426-9551
DATE

REGISTERED PROFESSIONAL ENGINEER
YONG DENG
NO. C65629
EXP. 09/30/13
CIVIL
STATE OF CALIFORNIA

MARK	REVISIONS	APPR.	DATE
1	REVISED DETAIL NOTES	YD	10/28/13

DESIGNED BY RW DRAWN BY TP CHECKED BY MSN

UPRR BRIDGE 55.54 LOS ANGELES SUB
CITY OF RIVERSIDE, CALIFORNIA
PUBLIC WORKS DEPARTMENT
RIVERSIDE AVE UNDERPASS
PRESTRESSED CONCRETE FASCIA GIRDER DETAILS (4 OF 6)
HORIZ. SCALE: AS SHOWN VERT. SCALE: AS SHOWN

STRUCTURE SHEET NO. S37
ACCT. NO. -
W.O. NO. -
R-4240
SHEET 123 OF 146
FILE NO.

DRAWING NAME: \\netapp02\lb_projects\8318 lb13\CADD\Sheet\STRUCTURE\63550\S037_Addendum1.dwg
PLOT DATE: Sep 27, 2016 - 8:31am PLOTTED BY: dleigh

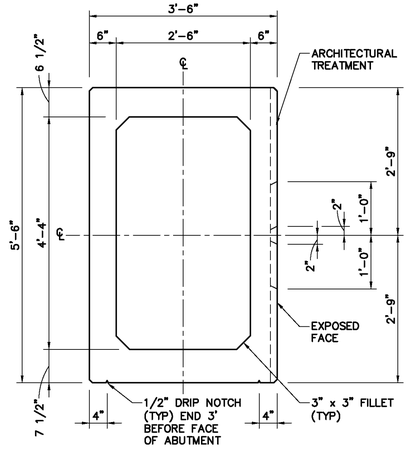

FASCIA GIRDER FRAMING SECTION

3/4"=1'-0"

E E E E

S34 S38 S35 S38 S36 S38 S37 S38

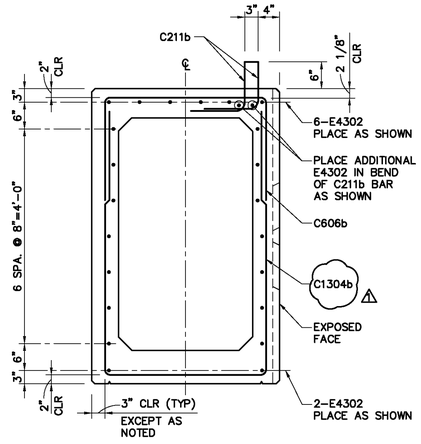

FASCIA GIRDER REINFORCING SECTION

3/4"=1'-0"

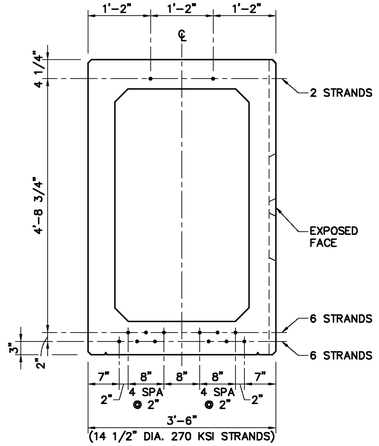

FASCIA GIRDER PRESTRESSING STRAND SECTION

3/4"=1'-0"

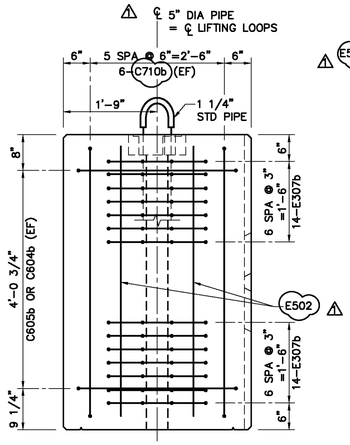

FASCIA GIRDER REINFORCING END VIEW

3/4"=1'-0"

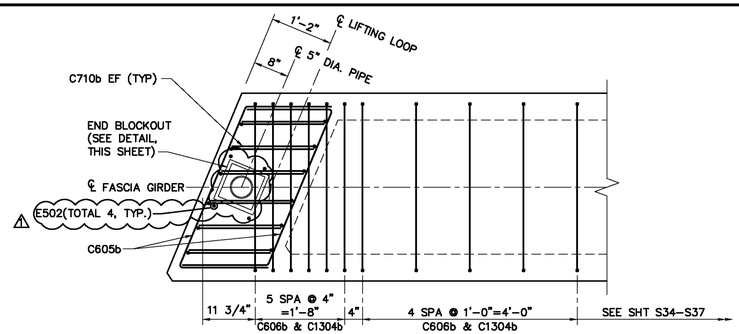

SECTION

3/4"=1'-0"

C C C C C

S34 S38 S35 S38 S36 S38 S37 S38

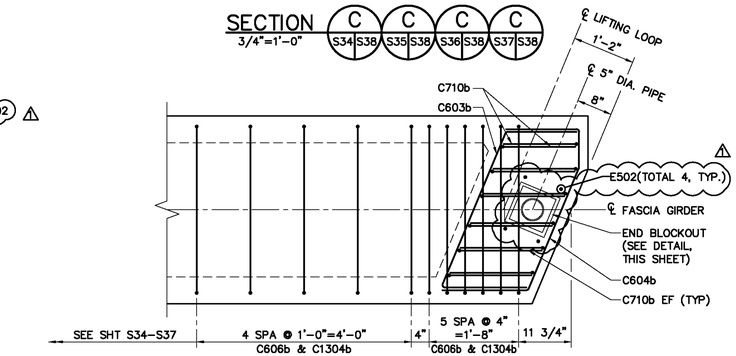

SECTION

3/4"=1'-0"

D D D D

S34 S38 S35 S38 S36 S38 S37 S38

GENERAL NOTES–PRESTRESSED CONCRETE FASCIA GIRDER

CONCRETE:

CONCRETE MATERIAL, PLACING AND CURING SHALL BE IN ACCORDANCE WITH THE REQUIREMENTS SPECIFIED IN THE SPECIFICATIONS AND THE CURRENT EDITION OF CHAPTER 8 OF THE AREMA MANUAL FOR RAILWAY ENGINEERING.

THE COMPRESSIVE STRENGTH OF THE CONCRETE SHALL EXCEED 5000 PSI AT 28 DAYS AND 4000 PSI AT TRANSFER OF PRESTRESSING FORCE.

AIR ENTRAINING AGENTS SHALL BE IN ACCORDANCE WITH THE REQUIREMENTS SPECIFIED IN THE CURRENT EDITION OF ASTM C260. THE TOTAL ENTRAINED AIR CONTENT SHALL BE 6% + 1% BY VOLUME OF THE PLASTIC CONCRETE.

CONCRETE AGGREGATE SHALL BE IN ACCORDANCE WITH THE REQUIREMENTS SPECIFIED IN THE CURRENT EDITION OF ASTM C33. COARSE AGGREGATE SHALL BE SIZE NO. 67.

PRESTRESSING STRAND:

PRESTRESSING STRAND SHALL BE 1/2" INCH DIAMETER, SEVEN WIRE, UNCOATED, LOW RELAXATION STRAND WHICH IS IN ACCORDANCE WITH THE REQUIREMENTS SPECIFIED IN ASTM A416. THE STRAND SHALL HAVE AN ULTIMATE TENSILE STRENGTH OF 270 KSI. THE INITIAL PRESTRESS SHALL BE 30,600 LBS. PER STRAND.

STRAND SHALL BE TESTED IN ACCORDANCE WITH PCI RECOMMENDATIONS (MOUSTAFA METHOD) AND CERTIFIED BY THE FABRICATOR AS HAVING ADEQUATE BOND CHARACTERISTICS TO SATISFY THE PREDICTION EQUATIONS FOR TRANSFER AND DEVELOPMENT LENGTH GIVEN IN THE AREMA MANUAL FOR RAILWAY ENGINEERING.

AN ALTERNATE STRAND PATTERN WHICH HAS THE SAME ECCENTRICITY AS THE PATTERN SHOWN ON THIS PLAN AND IS BETTER SUITED TO THE MANUFACTURER'S FACILITIES WILL BE CONSIDERED. MANUFACTURER MUST SUBMIT PLANS AND COMPUTATIONS FOR RAILROAD APPROVAL PRIOR TO CASTING.

REINFORCING STEEL:

REINFORCING STEEL SHALL BE DEFORMED, PER CURRENT ASTM A615 SPECIFICATION AND MEET GRADE 60 REQUIREMENTS.

FABRICATION OF REINFORCING STEEL SHALL BE PER CHAPTER 7 OF THE CRSI MANUAL OF STANDARD PRACTICE. DIMENSIONS OF BENDING DETAILS ARE OUT TO OUT OF BAR.

REINFORCING STEEL IS TO BE BLOCKED TO PROPER LOCATION AND SECURELY WIRED AGAINST DISPLACEMENT. USE PLASTIC PROTECTED REINFORCING SUPPORTS, MEETING CRSI SPECIFICATIONS CHAPTER 3, CLASS 1. TACK WELDING OF REINFORCING IS PROHIBITED. MINIMUM CONCRETE COVER ON REINFORCEMENT SHALL MEET CURRENT AREMA REQUIREMENTS.

MANUFACTURE:

PRODUCTION PROCEDURES AND DIMENSIONAL TOLERANCES FOR THE MANUFACTURE OF PRECAST, PRESTRESSED GIRDERS SHALL BE IN ACCORDANCE WITH THE AREMA MANUAL FOR RAILWAY ENGINEERING AND THE PRESTRESSED CONCRETE INSTITUTE'S CURRENT MANUAL MNL 116 FOR QUALITY CONTROL.

MANUFACTURE (CONT.):

TOLERANCE FOR LOCATION OF LIFTING LOOPS SHALL BE 1/2"±.

THE ENDS OF THE STRANDS SHALL BE BURNED OFF AND RECESSED TO A DEPTH OF 2 INCH. SUCH RECESSES AND MINOR SPALLS MUST BE FILLED AND FINISHED TO THE PLAN DIMENSIONS USING AN EPOXY BONDING COMPOUND AND GROUT.

SURFACES SHALL BE FORMED IN A MANNER WHICH WILL PRODUCE A SMOOTH AND UNIFORM APPEARANCE WITHOUT RUBBING OR PLASTERING. UNLESS OTHERWISE NOTED, EXPOSED EDGES OF 90–DEGREES OR LESS ARE TO BE CHAMFERED 3/4" x 3/4". UNFORMED SURFACES SHALL HAVE A SMOOTH FINISH FREE OF ALL FLOAT AND TROWEL MARKS.

THE FABRICATOR SHALL STENCIL THE FABRICATOR'S NAME, DATE OF FABRICATION, PIECE MARK, AND LIFTING WEIGHT AT LOCATION SHOWN.

THE AREA AROUND LIFTING LOOPS SHALL BE RECESSED 3/4". LIFTING LOOPS TO BE REMOVED IN FIELD FLUSH WITH CONCRETE SURFACE AND GROUTED AFTER LIFTING LOOPS ARE REMOVED.

INSPECTION, LOADING, AND SECURING FOR SHIPMENT: REFER TO SPECIFICATIONS.

IF LIFTED WITH SLINGS INSTEAD OF LIFTING LOOPS, SLINGS MUST NOT BE PLACED MORE THAN 3'–0" FROM ENDS OF BEAMS.

LIFTING LOOPS:

FABRICATOR IS RESPONSIBLE FOR DEVELOPING LIFTING LOOP ANCHORAGE DETAIL TO PROVIDE SAFETY FACTOR OF 4 ON WORKING LOAD. DETAIL SHALL BE PROOF–TESTED WITH TEST RESULTS KEPT ON FILE BY FABRICATOR AND AVAILABLE FOR INSPECTION.

MATERIAL SCHEDULE

(PRESTRESSED CONCRETE FASCIA GIRDERS)

REQUIRED					
FG–1	FG–2	FG–3	FG–4	UNIT	DESCRIPTION
15.4	15.4	15.4	15.4	CU.YD.	5000 PSI CONCRETE
1	1	1	1	LOT	REINFORCING STEEL (PER SCHEDULE)
616	616	616	616	L.F.	1/2" DIA 270 KSI STRAND
2	2	2	2	EA.	5" DIA. SCHEDULE 40 STEEL PIPE (ASTM A53, GRADE B)
2	2	2	2	EA.	LIFTING LOOP

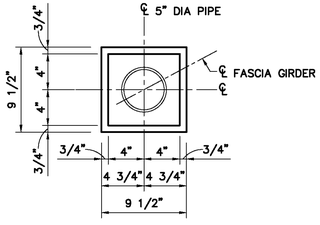

PLAN

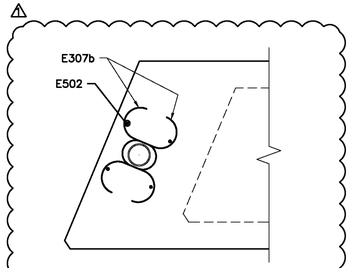

E307b BAR PLACEMENT

3/4"=1'-0"

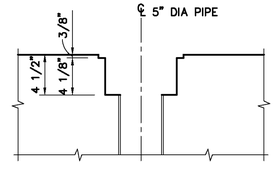

SECTION

END BLOCKOUT DETAIL

1 1/2"=1'-0"

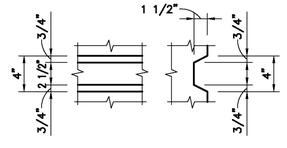

4" WIDE REVEAL DETAIL

1 1/2"=1'-0"

ASBUILT

BID NO. 7185

COMPLETION DATE 03/25/2016

R.E. NAME BONAVENTURE EZEJI

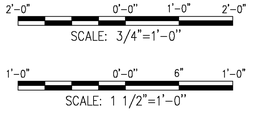

DIGALERT

DIAL TOLL FREE 1-800-422-4133

AT LEAST TWO DAYS BEFORE YOU DIG

UNDERGROUND SERVICE ALERT OF SOUTHERN CALIFORNIA

MOFFATT & NICHOL

3780 KILROY AIRPORT WAY, SUITE 600

LONG BEACH, CALIFORNIA, 90806

562–426–9551

DATE _____

REGISTERED PROFESSIONAL ENGINEER — YONG DENG — NO. C65629 — EXP. 09/30/13 — CIVIL — STATE OF CALIFORNIA

MARK	REVISIONS	APPR.	DATE
⚠	REVISED NOTES & ADDED DETAILS	YD	10/28/13

DESIGNED BY RW DRAWN BY TP CHECKED BY MSN

UPRR BRIDGE 55.54 LOS ANGELES SUB

CITY OF RIVERSIDE, CALIFORNIA
PUBLIC WORKS DEPARTMENT

RIVERSIDE AVE UNDERPASS

PRESTRESSED CONCRETE FASCIA GIRDER DETAILS (5 OF 6)

HORIZ. SCALE: AS SHOWN VERT. SCALE: AS SHOWN

STRUCTURE SHEET NO. S38

ACCT. NO. –

W.O. NO. –

R–4240

SHEET 124 OF 146

FILE NO.

DRAWING NAME: \\retroplot02\b_projects\8318 its13\CADD\Sheet\STRUCTURE\635501S038_Addendum1.dwg
PLOT DATE: Sep 27, 2016 – 9:31am PLOTTED BY: dleigh

REINFORCING SCHEDULE

REQUIRED							
FG-1	FG-2	FG-3	FG-4	MARK	SIZE	LENGTH	SHAPE
65	65	65	65	C211b	4	2'-11"	
51	51	51	51	C606b	4	6'-6"	
9	9	9	9	C603b	4	6'-3"	
9	9	9	9	C604b	4	6'-4"	
18	18	18	18	C605b	4	6'-5"	
32	32	32	32	C710b	4	8'-2"	
51	51	51	51	C1304b	4	13'-4"	
56	56	56	56	E307b	6	3'-7"	
24	24	24	24	E4302	6	43'-2"	
4	4	4	4	E502	6	5'-2"	

EST. WT. OF REINFORCING STEEL FG-1 = 3011 LB.
EST. WT. OF REINFORCING STEEL FG-2 = 3011 LB.
EST. WT. OF REINFORCING STEEL FG-3 = 3011 LB.
EST. WT. OF REINFORCING STEEL FG-4 = 3011 LB.

BENDING DIAGRAM
(DIMENSIONS ARE OUT TO OUT)

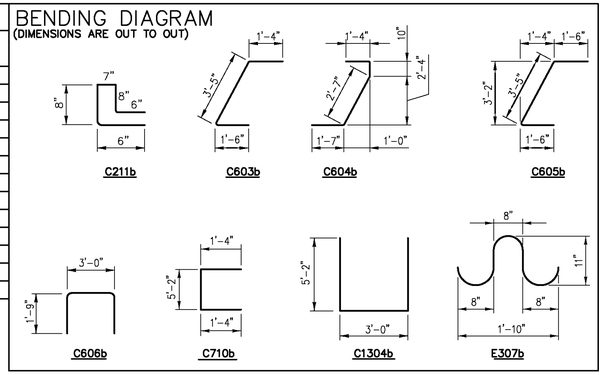

C211b C603b C604b C605b

C606b C710b C1304b E307b

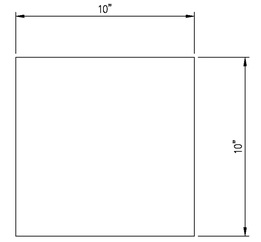

PLAN

ELEVATION

BEARING PAD MK. BP-2

SCALE: 3" = 1'-0"
(16 REQUIRED)
60 DUROMETER NEOPRENE

ASBUILT

BID NO. 7185
COMPLETION DATE 03/25/2016
R.E. NAME BONAVENTURE EZEJI

6" 0'-0" 3" 6"
SCALE: 3"=1'-0"

DIGALERT
DIAL TOLL FREE
1-800-422-4133
AT LEAST TWO DAYS BEFORE YOU DIG
UNDERGROUND SERVICE ALERT OF SOUTHERN CALIFORNIA

MOFFATT & NICHOL
3780 KILROY AIRPORT WAY, SUITE 600
LONG BEACH, CALIFORNIA, 90806
562-426-9551

DATE _____

REGISTERED PROFESSIONAL ENGINEER
YONG DENG
NO. C65629
EXP. 09/30/13
CIVIL
STATE OF CALIFORNIA

MARK	REVISIONS	APPR.	DATE

DESIGNED BY RW DRAWN BY TP CHECKED BY MSN

UPRR BRIDGE 55.54 LOS ANGELES SUB

CITY OF RIVERSIDE, CALIFORNIA
PUBLIC WORKS DEPARTMENT

RIVERSIDE AVE UNDERPASS

PRESTRESSED CONCRETE FASCIA
GIRDER DETAILS (6 OF 6)

HORIZ. SCALE: AS SHOWN VERT. SCALE: AS SHOWN

STRUCTURE SHEET NO. S39
ACCT. NO. -
W.O. NO. -
R-4240
SHEET 125 OF 146
FILE NO.

DRAWING NAME: \\netapp1b02\b_projects\8318 Ib13\CADD\Sheet\STRUCTURE\635501S039.dwg
PLOT DATE: Sep 27, 2016 - 9:31am PLOTTED BY: dengh

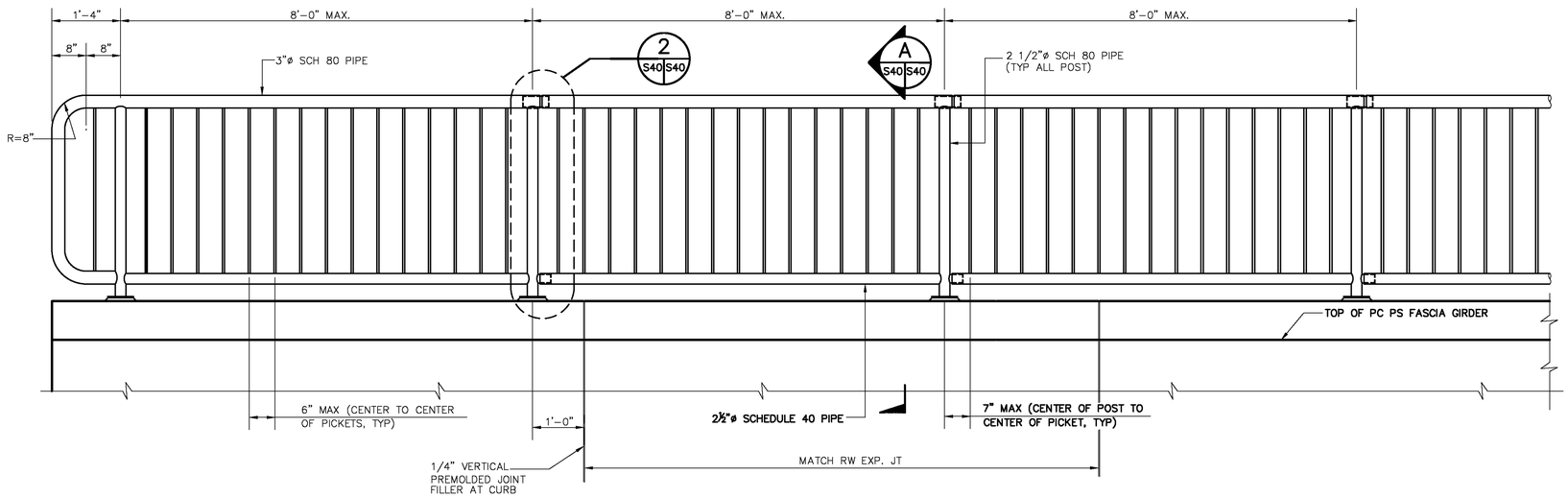

HANDRAIL ELEVATION

SCALE: 3/4"= 1'-0"

SECTION A
1"=1'-0"
S40 S40

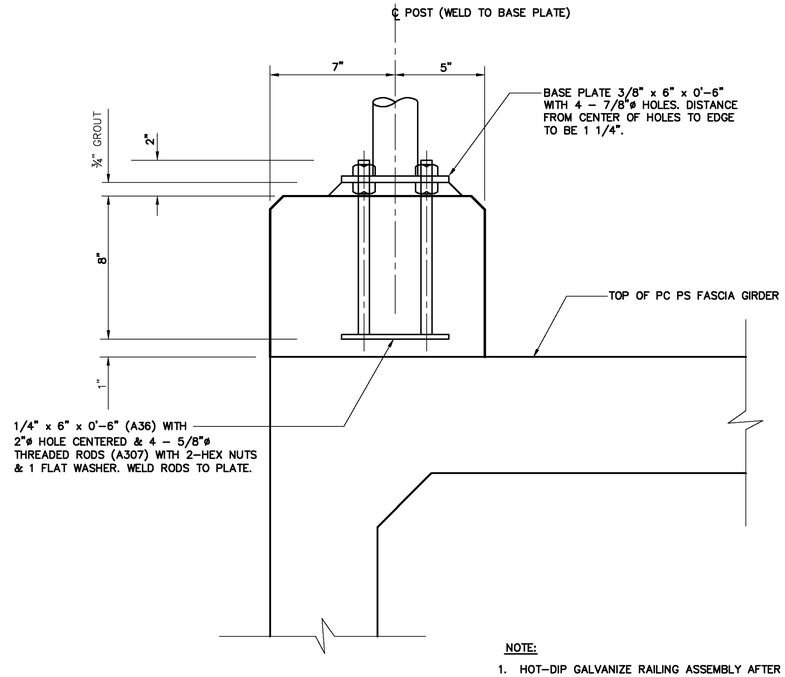

DETAIL 1
SCALE: 3" = 1'-0"
S40 S40

NOTE:

1. HOT-DIP GALVANIZE RAILING ASSEMBLY AFTER FABRICATION, AND PAINT WITH TWO COATS OF BLACK POLYURETHANE PAINT.

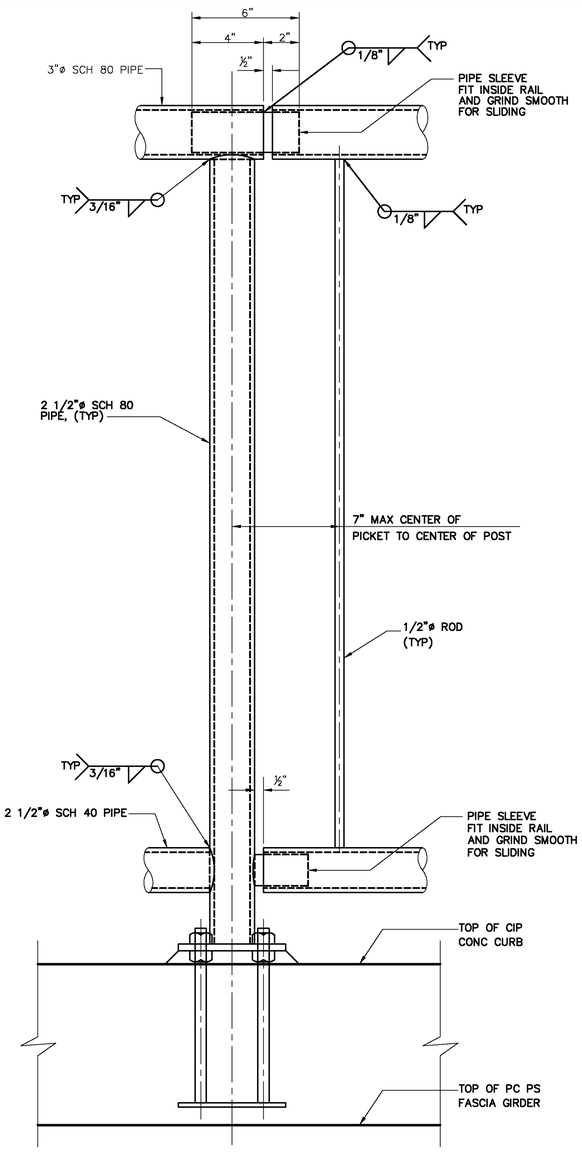

DETAIL 2
SCALE: 3" = 1'-0"
S40 S40

ASBUILT

BID NO. 7185

COMPLETION DATE 03/25/2016

R.E. NAME BONAVENTURE EZEJI

2'–0" 0'–0" 1'–0" 2'–0"
SCALE: 3/4"=1'–0"

1'–0" 0'–0" 1'–0" 2'–0"
SCALE: 1"=1'–0"

1'–0" 0'–0" 6" 1'–0"
SCALE: 1 1/2"=1'–0"

6" 0'–0" 3" 6"
SCALE: 3"=1'–0"

DIGALERT
DIAL TOLL FREE
1-800-422-4133
AT LEAST TWO DAYS
BEFORE YOU DIG
UNDERGROUND SERVICE ALERT OF SOUTHERN CALIFORNIA

MOFFATT & NICHOL
3780 KILROY AIRPORT WAY, SUITE 600
LONG BEACH, CALIFORNIA, 90806
562-426-9551

DATE

REGISTERED PROFESSIONAL ENGINEER
YONG DENG
NO. C65629
EXP. 09/30/13
CIVIL
STATE OF CALIFORNIA

MARK	REVISIONS	APPR.	DATE

DESIGNED BY RW DRAWN BY TP CHECKED BY MSN

UPRR BRIDGE 55.54 LOS ANGELES SUB

CITY OF RIVERSIDE, CALIFORNIA
PUBLIC WORKS DEPARTMENT

RIVERSIDE AVE UNDERPASS

BRIDGE STEEL HANDRAIL DETAILS

HORIZ. SCALE: AS SHOWN VERT. SCALE: AS SHOWN

STRUCTURE SHEET NO. S40

ACCT. NO. –
W.O. NO. –

R-4240

SHEET 126 OF 146

FILE NO.

DRAWING NAME: \\netapplb02\lb_projects\8318 lb13\CADD\Sheet\STRUCTURE\635501S040.dwg
PLOT DATE: Sep 27, 2016 - 9:32am PLOTTED BY: dlreigh

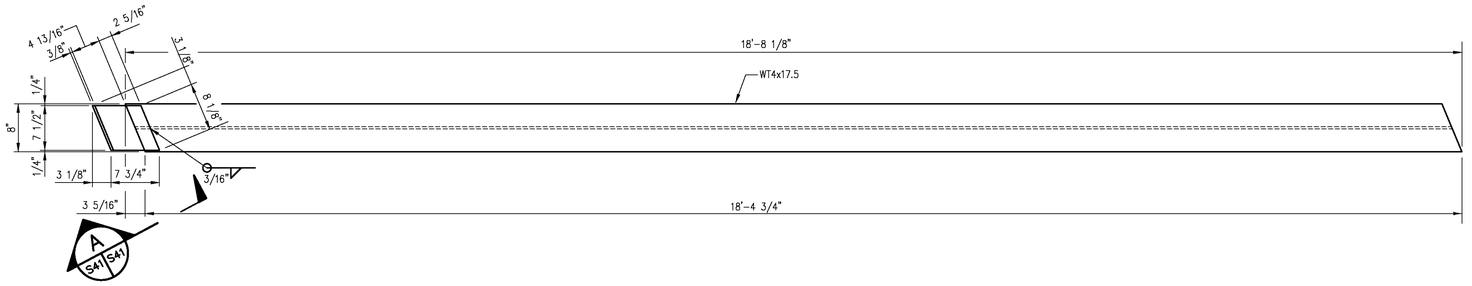

COVER PLATE MK. CP-1

SCALE: 1"=1'-0"

EST. WT. = 358 LB. EA. (3 REQUIRED)

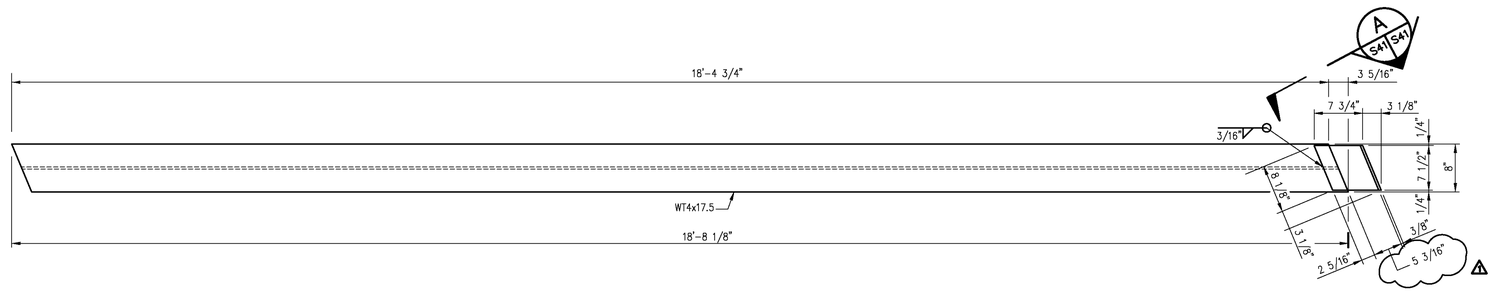

COVER PLATE MK. CP-2

SCALE: 1"=1'-0"

EST. WT. = 358 LB. EA. (3 REQUIRED)

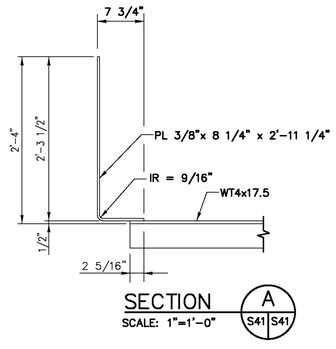

SECTION A

SCALE: 1"=1'-0"

S41 | S41

NOTES:

1. WT. SECTIONS TO BE PER ASTM A992 SPECIFICATIONS.
2. PLATE MATERIAL TO BE PER ASTM A709 GR 36-T1 ⚠1 SPECIFICATIONS.
3. COVER PLATES TO BE GALVANIZED PER ASTM A123 SPECIFICATIONS.

ASBUILT

BID NO. 7185

COMPLETION DATE 03/25/2016

R.E. NAME BONAVENTURE EZEJI

1'-0" 0'-0" 1'-0" 2'-0"

SCALE: 1"=1'-0"

DIGALERT
DIAL TOLL FREE
1-800-422-4133
AT LEAST TWO DAYS BEFORE YOU DIG
UNDERGROUND SERVICE ALERT OF SOUTHERN CALIFORNIA

MOFFATT & NICHOL
3780 KILROY AIRPORT WAY, SUITE 600
LONG BEACH, CALIFORNIA, 90806
562-426-9551

DATE

REGISTERED PROFESSIONAL ENGINEER
YONG DENG
NO. C55629
EXP. 09/30/13
CIVIL
STATE OF CALIFORNIA

MARK	REVISIONS	APPR.	DATE
⚠1	AS BUILT		

DESIGNED BY RW DRAWN BY TP CHECKED BY MSN

UPRR BRIDGE 55.54 LOS ANGELES SUB

CITY OF RIVERSIDE, CALIFORNIA
PUBLIC WORKS DEPARTMENT

RIVERSIDE AVE UNDERPASS

MISCELLANEOUS DETAILS

HORIZ. SCALE: AS SHOWN VERT. SCALE: AS SHOWN

STRUCTURE SHEET NO. S41

ACCT. NO. -
W.O. NO. -

R-4240

SHEET 127 OF 146

FILE NO.

DRAWING NAME: \\netapp1b02\lb_projects\8318 lb13\CADD\Sheet\STRUCTURE\835501S041.dwg
PLOT DATE: Sep 27, 2016 - 9:32am PLOTTED BY: dhegh

RETAINING WALL TYPE	
RW	TYPE
RW1	24" CIDH PILE RETAINING WALL
RW2	48" CIDH PILE RETAINING WALL
RW3	48" CIDH PILE AND CIP RETAINING WALL
RW4	CMU CANTILEVER RETAINING WALL
RW5	24" CIDH PILE RETAINING WALL
RW6	48" CIDH PILE RETAINING WALL
RW7	48"/24" CIDH PILE RETAINING WALL
RW8	SOLDIER PILE WALL

RW1
RW2
RR BRIDGE
RW3
25
26
S0° 46'5"W
27
28
29
30
31
32
RIVERSIDE AVE
RW5
RW6
RW7
RW4
SUNNYSIDE DR
TIPPERARY WAY
UPRR SOUTH R/W
UPRR MORTH R/W
ALIGNMENT 3+68.00' CURVE LEFT
ALIGNMENT 2+35.00' CURVE LEFT
PROP SHOOFLY
RW8
FUTURE MAIN TRACK
EXIST MAIN TRACK
NEW MAIN TRACK
ALIGNMENT 3+39.36' CURVE LEFT
2934
2935
2936
2937
2938
2939
2933
1
2
3
4
5

PLAN
SCALE: 1"= 30'

ASBUILT

BID NO. 7185

COMPLETION DATE 03/25/2016

R.E. NAME BONAVENTURE EZEJI

30' 0' 30' 60'

SCALE: 1"=30'

DRAWING NAME: \\retroplb02\lb_projects\6318 lb13\CADD\Sheet\STRUCTURE\635501S042.dwg
PLOT DATE: Sep 27, 2016 - 9:32am PLOTTED BY: dleigh

DIGALERT
DIAL TOLL FREE
1-800-422-4133
AT LEAST TWO DAYS BEFORE YOU DIG
UNDERGROUND SERVICE ALERT OF SOUTHERN CALIFORNIA

MOFFATT & NICHOL
3780 KILROY AIRPORT WAY, SUITE 600
LONG BEACH, CALIFORNIA, 90806
562-426-9551

DATE

REGISTERED PROFESSIONAL ENGINEER
YONG DENG
NO. C65629
EXP. 09/30/13
CIVIL
STATE OF CALIFORNIA

MARK	REVISIONS	APPR.	DATE

DESIGNED BY RW DRAWN BY TP CHECKED BY MSN

UPRR BRIDGE 55.54 LOS ANGELES SUB

CITY OF RIVERSIDE, CALIFORNIA
PUBLIC WORKS DEPARTMENT

RIVERSIDE AVE UNDERPASS

RETAINING WALL LOCATION GENERAL LAYOUT

HORIZ. SCALE: AS SHOWN VERT. SCALE: AS SHOWN

STRUCTURE SHEET NO. S42

ACCT. NO. -
W.O. NO. -

R-4240

SHEET 128 OF 146

FILE NO.

PILE DATA TABLE–WEST RETAINING WALL

RW	PILE TYPE	DESIGN LOADING	NOMINAL RESISTANCE		CUT–OFF ELEV * (FT)	DESIGN TIP PILE ELEV (FT)	PILE DESIGN LENGTH (L)
			COMPRESSION	TENSION			
RW 1	TYPE 1 24" CIDH PILE	N/A	N/A	N/A	VARIES	VARIES	28'
RW 1	TYPE 2 24" CIDH PILE	N/A	N/A	N/A	VARIES	VARIES	46'
RW 2	TYPE 3 48" CIDH PILE	N/A	N/A	N/A	VARIES	VARIES	68'
RW 2	TYPE 4 48" CIDH PILE	N/A	N/A	N/A	VARIES	VARIES	80'

PILE DATA TABLE–EAST RETAINING WALL

PILE NO.	PILE TYPE	DESIGN LOADING	NOMINAL RESISTANCE		CUT–OFF ELEV * (FT)	DESIGN TIP PILE ELEV (FT)	PILE DESIGN LENGTH (L)
			COMPRESSION	TENSION			
RW 5	TYPE 1 24" CIDH PILE	N/A	N/A	N/A	VARIES	VARIES	28'
RW 5	TYPE 2 24" CIDH PILE	N/A	N/A	N/A	VARIES	VARIES	46'
RW 6	TYPE 3 48" CIDH PILE	N/A	N/A	N/A	VARIES	VARIES	68'
RW 7	TYPE 3 48" CIDH PILE	N/A	N/A	N/A	VARIES	VARIES	68'
RW 7	TYPE 2 24" CIDH PILE	N/A	N/A	N/A	VARIES	VARIES	46'
RW 7	TYPE 1 24" CIDH PILE	N/A	N/A	N/A	VARIES	VARIES	28'

* CUT–OFF ELEV = BOTTOM OF PILE CAP + 0.25'

NOTES:

1. FOR LOCATION OF THE PILES, SEE "INDIVIDUAL RW" SHEET.
2. DESIGN TIP ELEVATION IS CONTROLLED BY THE FOLLOWING DEMANDS: (1) COMPRESSION; (2) TENSION; (3) LATERAL LOADS.
3. SPECIFIED TIP ELEVATION SHALL NOT BE RAISED.
4. FOR ARCHITECTURAL TREATMENT, SEE SPECIFICATIONS.
5. TIP OF SECANT PILE SHALL 1' BELOW FG.

DESIGN NOTES:

DESIGN: AMERICAN RAILWAY ENGINEERING MAINTENANCE–OF–WAY ASSOCIATION (AREMA) MANUAL FOR RAILWAY ENGINEERING (2010)–CHAPTER 8, CONCRETE STRUCTURE AND FOUNDATIONS, CHAPTER 9, SEISMIC DESIGN, CHAPTER 15, STEEL STRUCTURES AND CALTRANS BRIDGE DESIGN SPECIFICATIONS (2010).

CONCRETE:

CAST–IN–PLACE REINFORCED CONCRETE
$f'c$ = 4 ksi
fy = 60 ksi
n = 8

FASCIA WALL $f'c$ = 4 ksi

REINFORCING:

STEEL: ASTM A706 GRADE 60

SEISMIC LOAD: ACTIVE PLUS SEISMIC LOAD (SEE DESIGN FORCE DIAGRAM)

LATERAL EARTH PRESSURE:

ACTIVE EARTH PRESSURE		Pa = 36 H_3
PASSIVE EARTH PRESSURE		Pp = 450 H2
SURCHARGE PRESSURE		Ps = 0.3q
SEISMIC PRESSURE	RW9	Pe = 31.2 H (ACTIVE + EQ)
	RW8	Pe + 33.7 H (ACTIVE + EQ)

LOAD COMBINATIONS:

EXTERNAL STABILITY (FOR SLIDING AND OVERTURNING)
GROUP 1: D + E + L (FS ≥ 1.5)
GROUP 2: D + E + EQ (FS ≥ 1.0)

INTERNAL STABILITY (FOR MEMBER DESIGN)
SERVICE LOAD DESIGN:
GROUP I: D + L + E
GROUP II: D + E + EQ

LOAD FACTOR DESIGN:
GROUP I: 1.4 (D + 5/3 L + E)
GROUP IA: 1.8 (D + L + E)
GROUP II: 1.0 (D + E + EQ)

WHERE:
D = DEAD LOAD
E = LATERAL EARTH PRESSURE
EQ = SEISMIC LOAD
L = LIVE LOAD

INDEX TO PLANS

SHEET NO.	TITLE
S42	RETAINING WALL LOCATION GENERAL LAYOUT
S43	RETAINING WALL GENERAL NOTES AND INDEX TO PLANS
S44	RETAINING WALL 1 AND 2 PLAN AND ELEVATION
S45	RETAINING WALL 3 PLAN AND ELEVATION
S46	RETAINING WALL 4 PLAN AND ELEVATION
S47	RETAINING WALL 5 AND 6 PLAN AND ELEVATION
S48	RETAINING WALL 7 PLAN AND ELEVATION
S49	RETAINING WALL 8 PLAN AND ELEVATION
S50	RETAINING WALL 8 DETAILS (1 OF 2)
S51	RETAINING WALL 8 DETAILS (2 OF 2)
S52	24" DIA. CIDH PILE RETAINING WALL DETAILS
S53	48" DIA. CIDH PILE RETAINING WALL DETAILS
S54	RW STEEL HANDRAIL DETAILS

CALTRANS STANDARD DATED 2010 PLANS

A10A	ACRONYMS AND ABBREVIATIONS (SHEET 1 OF 2)
A10B	ACRONYMS AND ABBREVIATIONS (SHEET 2 OF 2)
A10C	SYMBOLS (SHEET 1 OF 2)
A10D	SYMBOLS (SHEET 2 OF 2)
A62B	LIMITS OF PAYMENT FOR EXCAVATION AND BACKFILL BRIDGE SURCHARGE AND WALL
B0–3	BRIDGE DETAILS
RSP B3–1B	RETAINING WALL TYPE 1 (CASE 2)
B3–5	RETAINING WALL DETAILS NO. 1
B3–6	RETAINING WALL DETAILS NO. 2

PLAN SYMBOLS

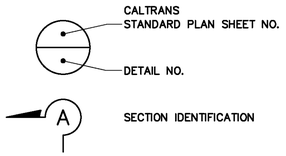

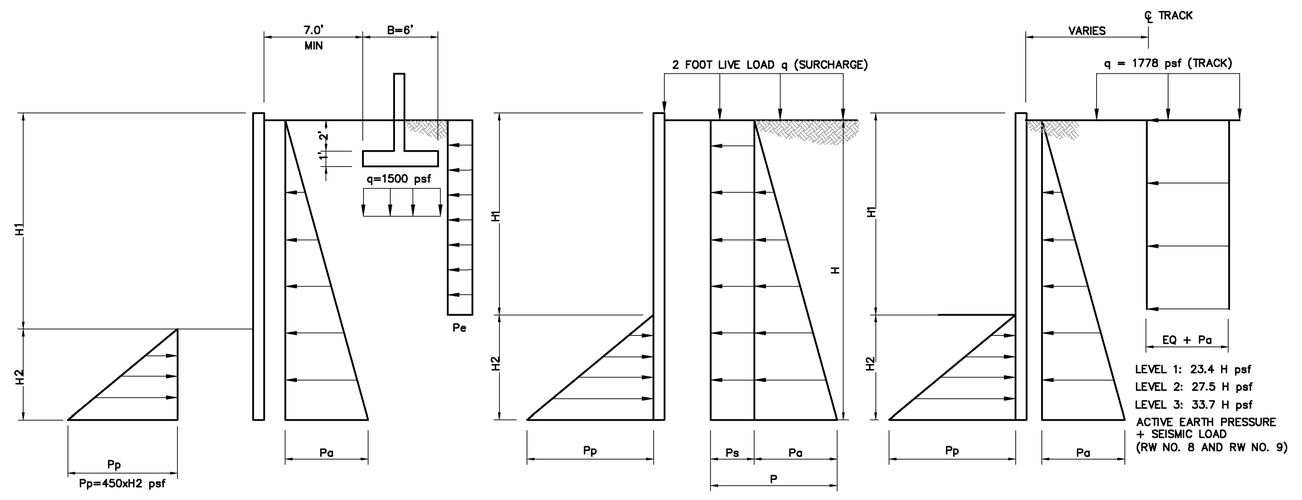

CANTILEVER WALL WITH BUILDING (RW1 ONLY) | OTHER CIDH PILES WITHOUT BUILDING | RW8 & RW9 | CANTILEVER WALL

DESIGN FORCE DIAGRAM

ASBUILT
BID NO. 7185
COMPLETION DATE 03/25/2016
R.E. NAME BONAVENTURE EZEJI

DIGALERT
DIAL TOLL FREE
1-800-422-4133
AT LEAST TWO DAYS BEFORE YOU DIG
UNDERGROUND SERVICE ALERT OF SOUTHERN CALIFORNIA

MOFFATT & NICHOL
3780 KILROY AIRPORT WAY, SUITE 600
LONG BEACH, CALIFORNIA, 90806
562–426–9551

DATE _____

REGISTERED PROFESSIONAL ENGINEER
YONG DENG
NO. C65629
EXP. 09/30/13
CIVIL
STATE OF CALIFORNIA

MARK	REVISIONS	APPR.	DATE
⚠	REVISED INDEX TO PLANS	YD	08/28/14

DESIGNED BY RW DRAWN BY TP CHECKED BY MSN

UPRR BRIDGE 55.54 LOS ANGELES SUB

CITY OF RIVERSIDE, CALIFORNIA
PUBLIC WORKS DEPARTMENT

RIVERSIDE AVE UNDERPASS

RETAINING WALL GENERAL NOTES AND INDEX TO PLANS

HORIZ. SCALE: AS SHOWN VERT. SCALE: AS SHOWN

STRUCTURE SHEET NO. S43
ACCT. NO. –
W.O. NO. –
R–4240
SHEET 129 OF 146
FILE NO.

DRAWING NAME: \\retopplb02\lb_projects\6318 lb13\CADD\Sheet\STRUCTURE\635501S043.dwg
PLOT DATE: Sep 27, 2016 – 9:32am PLOTTED BY: dleigh

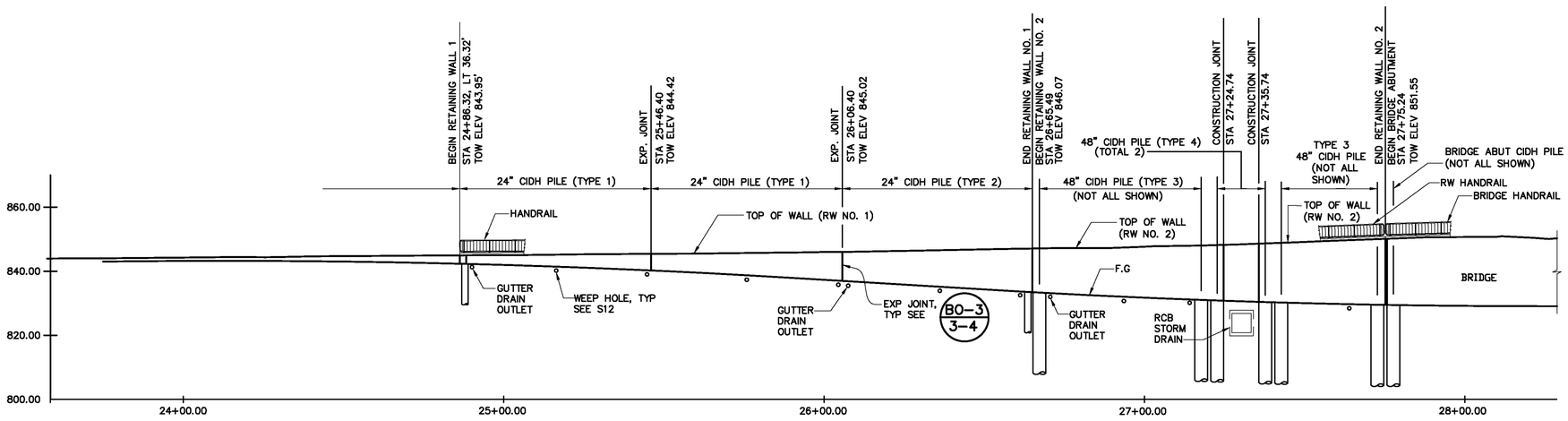

ELEVATION
SCALE: 1" = 20'

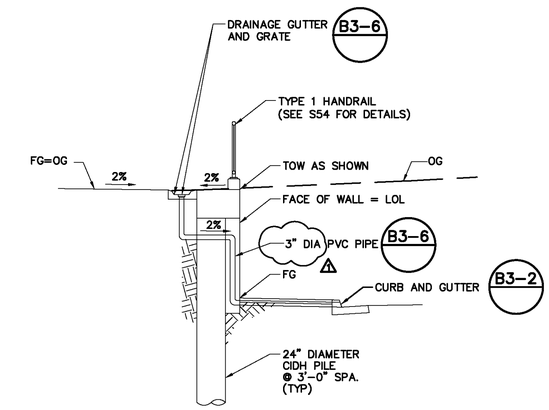

RETAINING WALL NO. 1 TYPICAL SECTION
SCALE: 1" = 5'-0"
TOW = TOP OF WALL

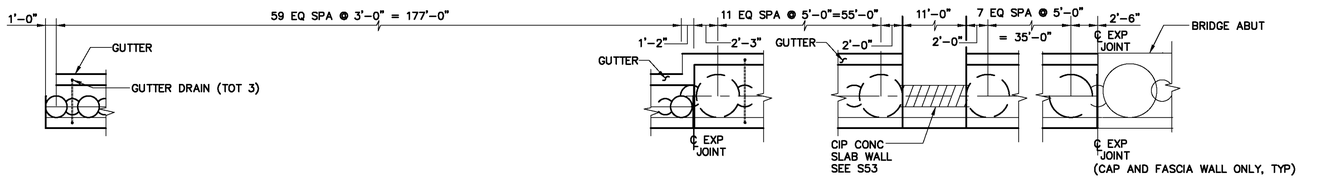

ENLARGED PLAN
N.T.S.

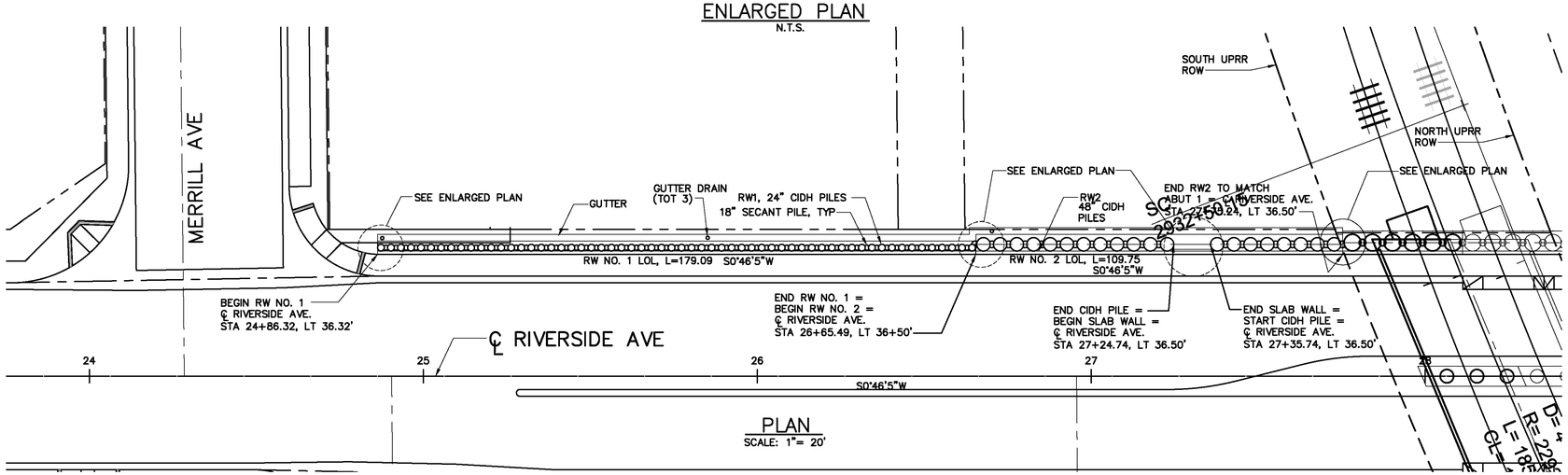

PLAN
SCALE: 1"= 20'

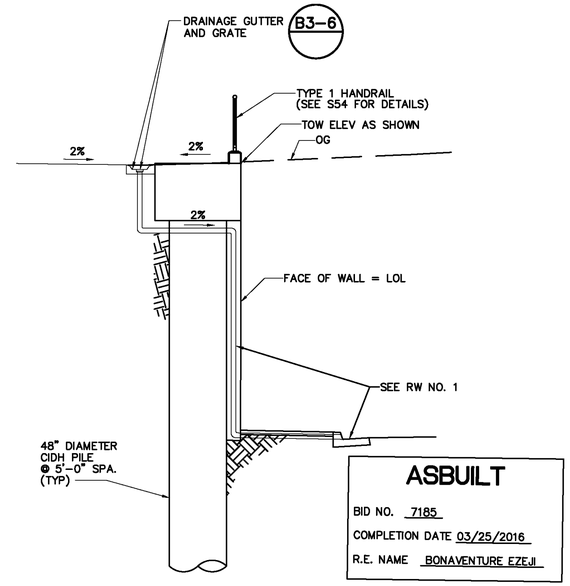

RETAINING WALL NO. 2 TYPICAL SECTION
SCALE: 1" = 5'-0"

20' 0' 20' 40'
SCALE: 1"=20'

ASBUILT
BID NO. 7185
COMPLETION DATE 03/25/2016
R.E. NAME BONAVENTURE EZEJI

DIGALERT
DIAL TOLL FREE
1-800-422-4133
AT LEAST TWO DAYS
BEFORE YOU DIG
UNDERGROUND SERVICE ALERT OF SOUTHERN CALIFORNIA

MOFFATT & NICHOL
3780 KILROY AIRPORT WAY, SUITE 600
LONG BEACH, CALIFORNIA, 90806
562-426-9551

DATE

REGISTERED PROFESSIONAL ENGINEER
YONG DENG
NO. C65629
EXP. 09/30/13
CIVIL
STATE OF CALIFORNIA

MARK	REVISIONS	APPR.	DATE
1	AS BUILT		

DESIGNED BY RW DRAWN BY TP CHECKED BY MSN

UPRR BRIDGE 55.54 LOS ANGELES SUB

CITY OF RIVERSIDE, CALIFORNIA
PUBLIC WORKS DEPARTMENT

RIVERSIDE AVE UNDERPASS

RETAINING WALLS 1 AND 2
PLAN AND ELEVATION

HORIZ. SCALE: AS SHOWN VERT. SCALE: AS SHOWN

STRUCTURE SHEET NO. S44
ACCT. NO. -
W.O. NO. -
R-4240
SHEET 130 OF 146
FILE NO.

DRAWING NAME: \\retroplot02\lb_projects\8318 its13\CADD\Sheet\STRUCTURE\635501S044.dwg
PLOT DATE: Sep 27, 2016 - 9:32am PLOTTED BY: dleigh

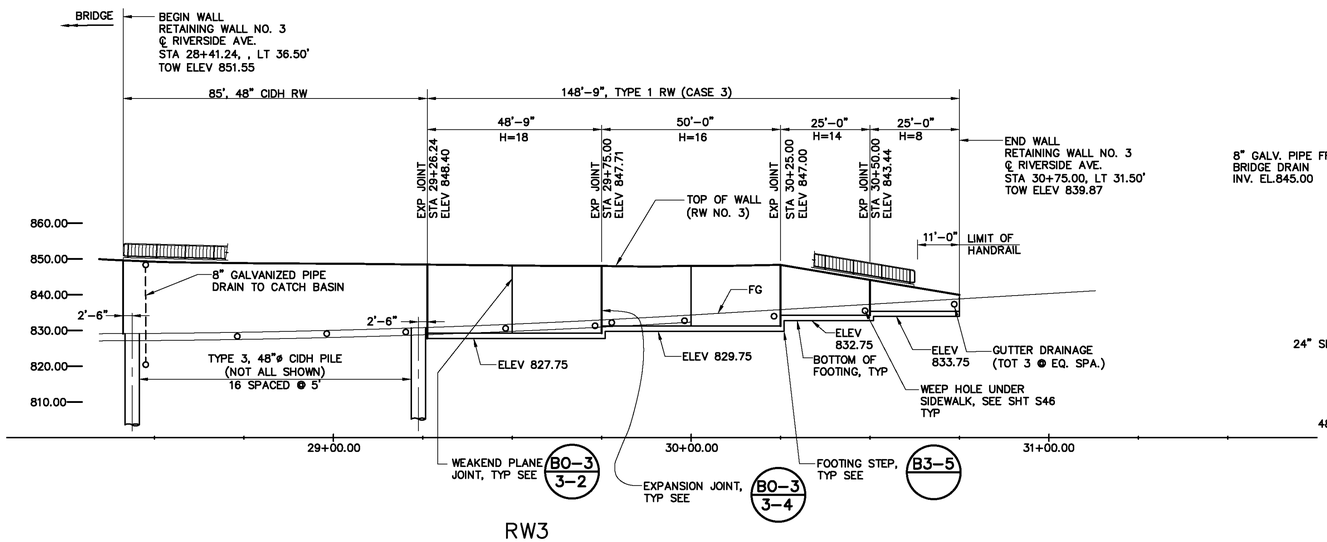

RW3

ELEVATION

SCALE: 1" = 20'

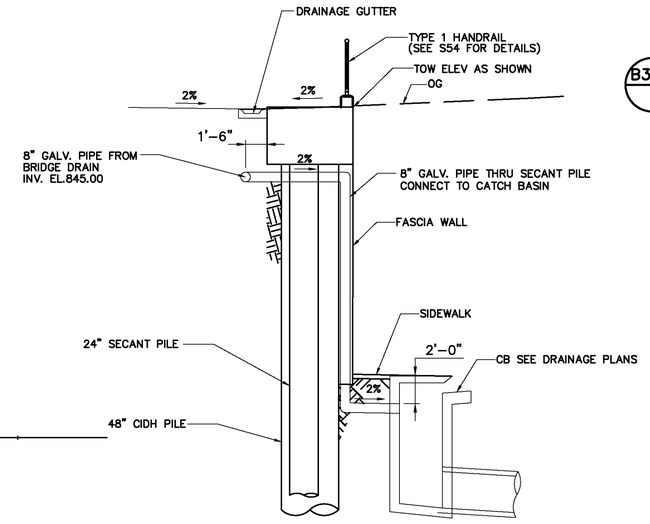

BRIDGE DRAIN DETAILS

NTS

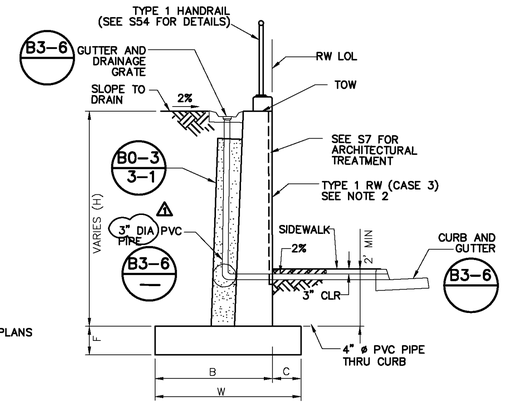

RETAINING WALL NO. 3 TYPICAL SECTION

NTS

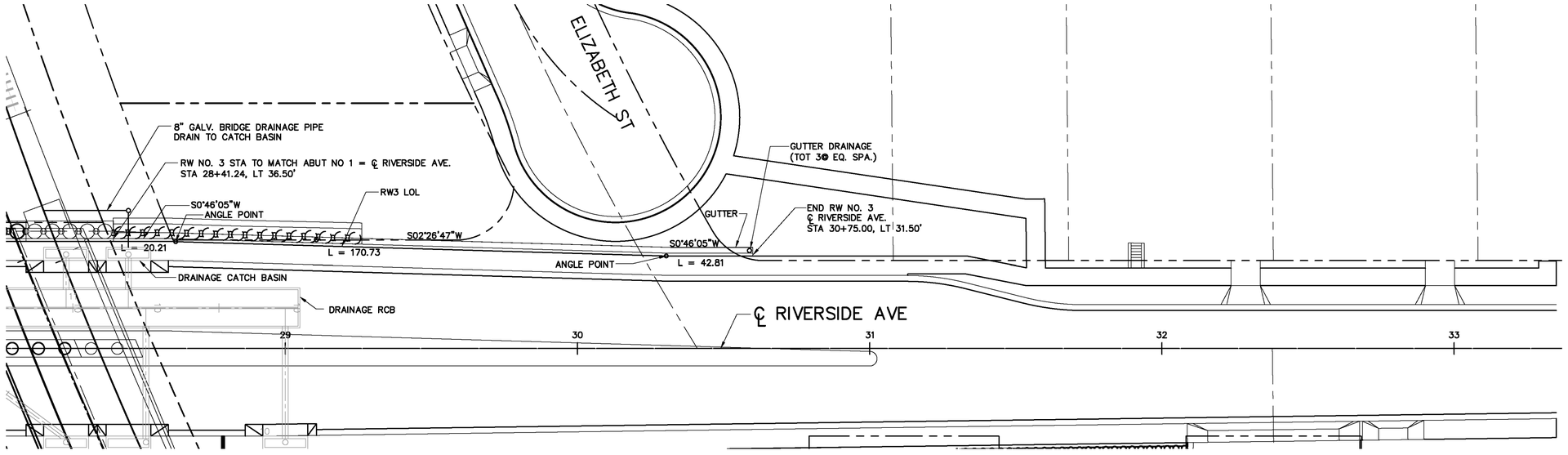

PLAN

SCALE: 1"= 20'

ASBUILT

BID NO. 7185

COMPLETION DATE 03/25/2016

R.E. NAME BONAVENTURE EZEJI

NOTE:

1. SEE SHEET S8 FOR FOOTING DETAIL AT CATCH BASIN
2. SEE CALTRNS STANDARD PLANS RSP B3-1B/B3-1C
3. SEE S44 FOR ADDITIONAL DETAILS NOT SHOWN.
4. SEE S12 FOR CIDH PILE AND CIP RETAINING WALL CONNECTION.

20' 0' 20' 40'

SCALE: 1"=20'

DIGALERT
DIAL TOLL FREE
1-800-422-4133
AT LEAST TWO DAYS
BEFORE YOU DIG
UNDERGROUND SERVICE ALERT OF SOUTHERN CALIFORNIA

MOFFATT & NICHOL
3780 KILROY AIRPORT WAY, SUITE 600
LONG BEACH, CALIFORNIA, 90806
562-426-9551

DATE _____

REGISTERED PROFESSIONAL ENGINEER
YONG DENG
NO. C65629
EXP. 09/30/13
CIVIL
STATE OF CALIFORNIA

MARK	REVISIONS	APPR.	DATE
⚠	AS BUILT		

DESIGNED BY RW DRAWN BY TP CHECKED BY MSN

UPRR BRIDGE 55.54 LOS ANGELES SUB

CITY OF RIVERSIDE, CALIFORNIA
PUBLIC WORKS DEPARTMENT

RIVERSIDE AVE UNDERPASS

RETAINING WALL NO. 3 PLAN AND ELEVATION

HORIZ. SCALE: AS SHOWN VERT. SCALE: AS SHOWN

STRUCTURE SHEET NO. S45

ACCT. NO. -
W.O. NO. -

R-4240

SHEET 131 OF 146

FILE NO.

DRAWING NAME: \\retopplb02\lb_projects\6318 its13\CADD\Sheet\STRUCTURE\635501S045.dwg
PLOT DATE: Sep 27, 2016 - 9:32am PLOTTED BY: dleigh

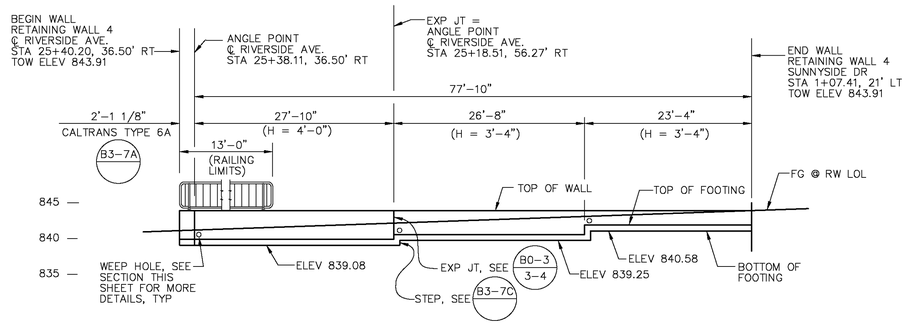

ELEVATION
SCALE: 1" = 10'-0"

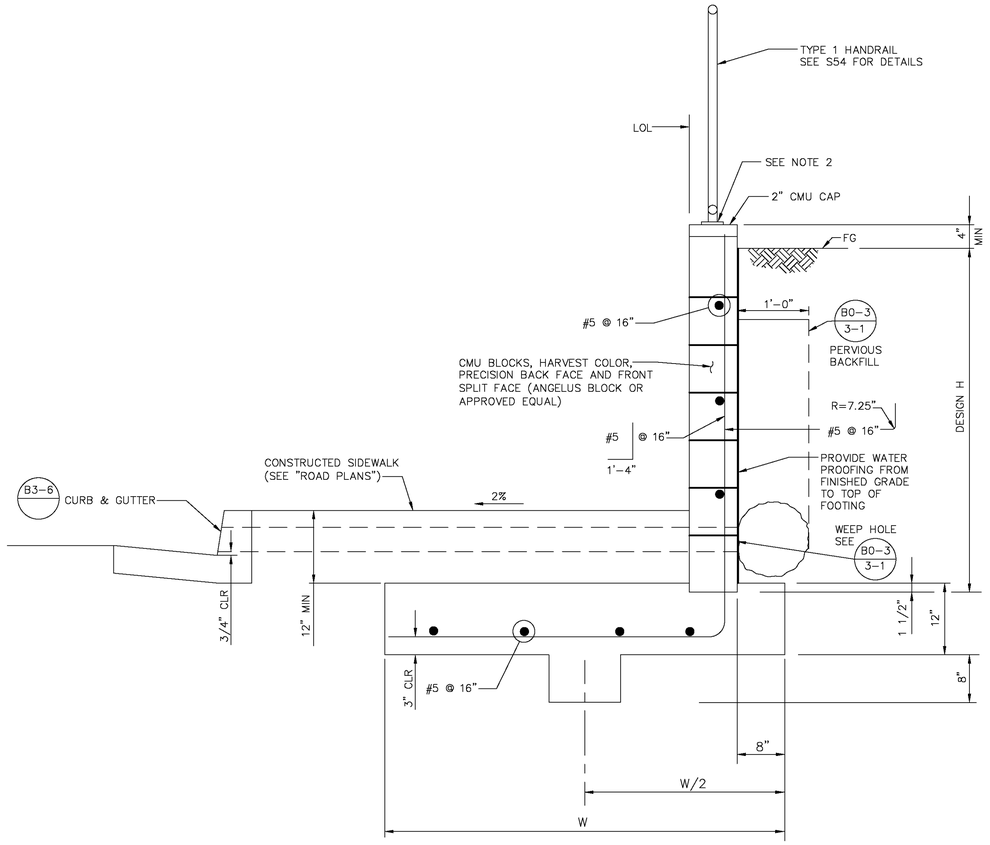

TYPICAL SECTION
SCALE: 1"= 1'-0"

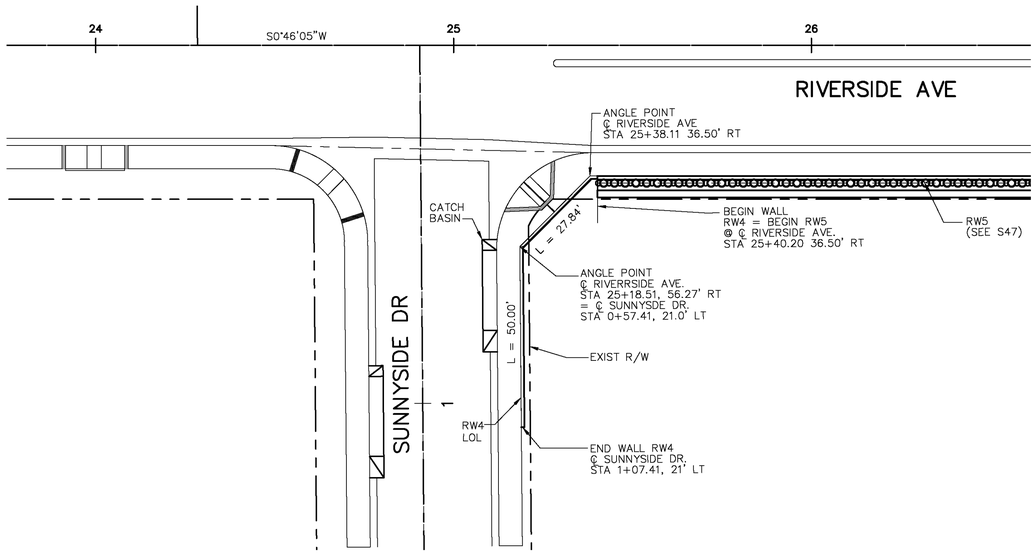

PLAN
SCALE: 1"= 20'

ASBUILT

BID NO. 7185

COMPLETION DATE 03/25/2016

R.E. NAME BONAVENTURE EZEJI

NOTES:

1. SEE SHEET S8 FOR FOOTING DETAILS AT CATCH BASIN
2. INSTALL HANDRAIL POST PER APWA STD PLAN NO. 606-3 FOR CMU WALL.

20' 0' 20' 40'

SCALE: 1"=20'

DIGALERT
DIAL TOLL FREE
1-800-422-4133
AT LEAST TWO DAYS BEFORE YOU DIG
UNDERGROUND SERVICE ALERT OF SOUTHERN CALIFORNIA

MOFFATT & NICHOL
3780 KILROY AIRPORT WAY, SUITE 600
LONG BEACH, CALIFORNIA, 90806
562-426-9551

DATE

REGISTERED PROFESSIONAL ENGINEER
YONG DENG
NO. C65629
EXP. 09/30/13
CIVIL
STATE OF CALIFORNIA

MARK	REVISIONS	APPR.	DATE

DESIGNED BY RW DRAWN BY TP CHECKED BY MSN

UPRR BRIDGE 55.54 LOS ANGELES SUB

STRUCTURE SHEET NO. S46

ACCT. NO. -
W.O. NO. -

CITY OF RIVERSIDE, CALIFORNIA
PUBLIC WORKS DEPARTMENT

RIVERSIDE AVE UNDERPASS

R-4240

RETAINING WALL 4 PLAN AND ELEVATION

SHEET 132 OF 146

HORIZ. SCALE: AS SHOWN VERT. SCALE: AS SHOWN

FILE NO.

DRAWING NAME: \\netapplib02\lb_projects\6318 lb13\CADD\Sheet\STRUCTURE\635501S046.dwg
PLOT DATE: Sep 27, 2016 - 9:32am PLOTTED BY: dleigh

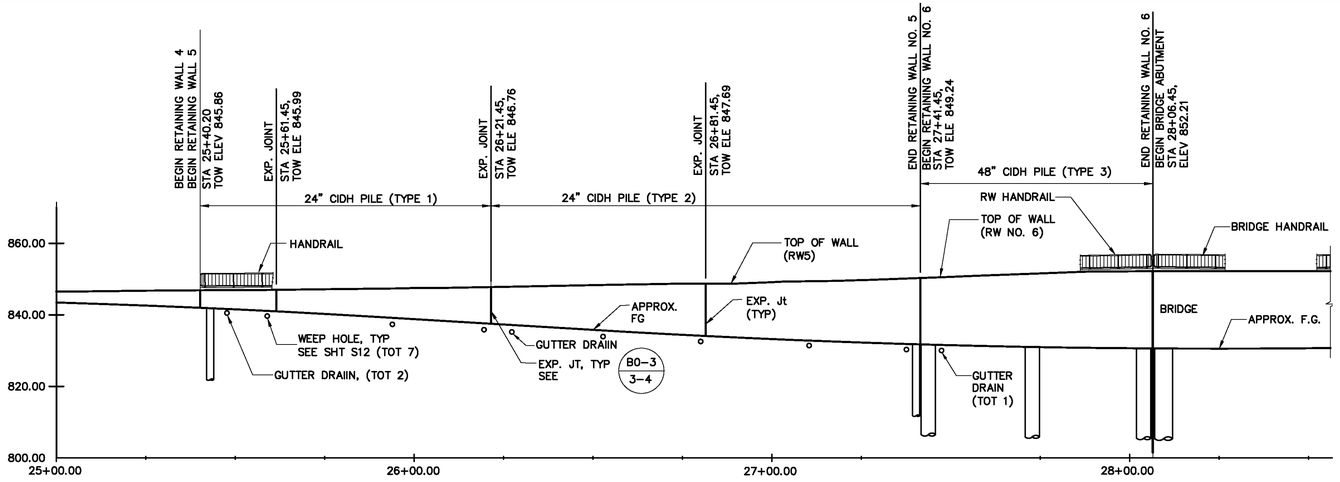

ELEVATION
SCALE: 1" = 20'

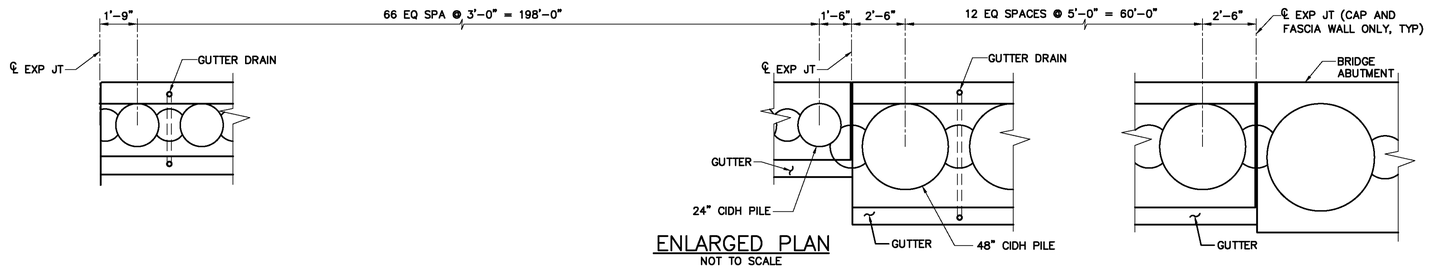

ENLARGED PLAN
NOT TO SCALE

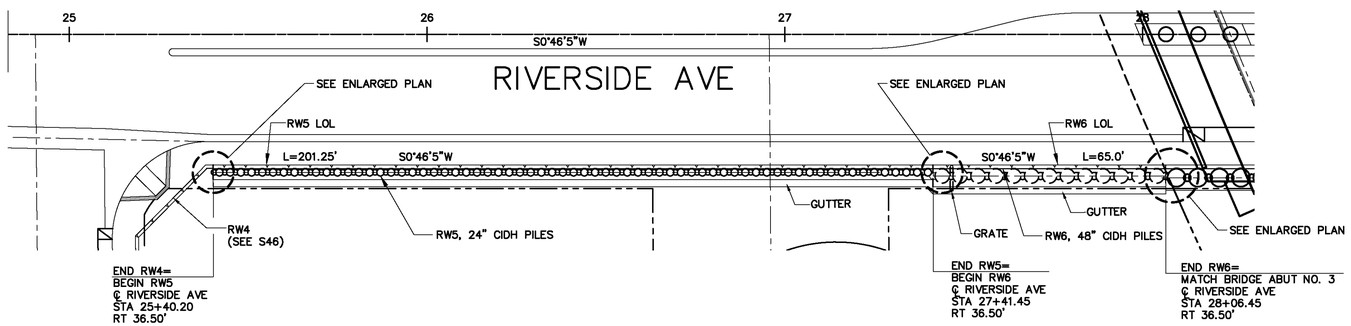

PLAN
SCALE: 1"= 20'

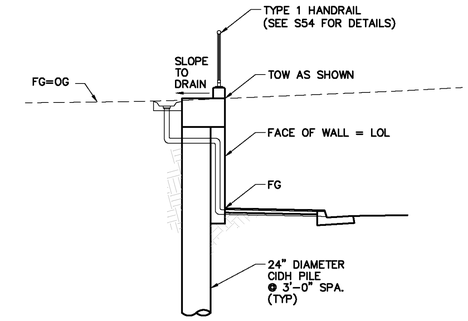

RETAINING WALL NO. 5 TYPICAL SECTION
SCALE: 1" = 5'-0"

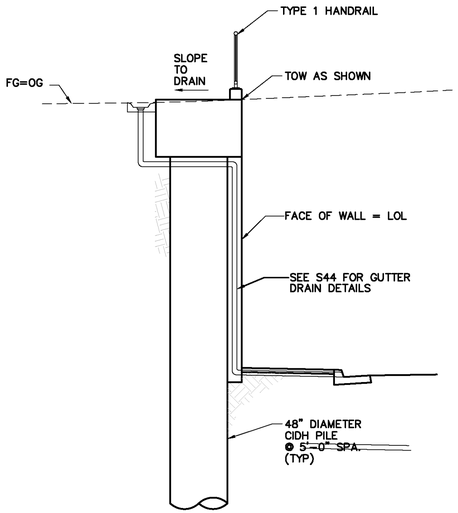

RETAINING WALL NO. 6 TYPICAL SECTION
SCALE: 1" = 5'-0"

TOW = TOP OF WALL

20' 0' 20' 40'
SCALE: 1"=20'

ASBUILT
BID NO. 7185
COMPLETION DATE 03/25/2016
R.E. NAME BONAVENTURE EZEJI

DIGALERT
DIAL TOLL FREE
1-800-422-4133
AT LEAST TWO DAYS BEFORE YOU DIG
UNDERGROUND SERVICE ALERT OF SOUTHERN CALIFORNIA

MOFFATT & NICHOL
3780 KILROY AIRPORT WAY, SUITE 600
LONG BEACH, CALIFORNIA, 90806
562-426-9551

DATE

REGISTERED PROFESSIONAL ENGINEER
YONG DENG
NO. C65629
EXP. 09/30/13
CIVIL
STATE OF CALIFORNIA

MARK	REVISIONS	APPR.	DATE

DESIGNED BY RW DRAWN BY TP CHECKED BY MSN

UPRR BRIDGE 55.54 LOS ANGELES SUB

CITY OF RIVERSIDE, CALIFORNIA
PUBLIC WORKS DEPARTMENT

RIVERSIDE AVE UNDERPASS

RETAINING WALLS 5 AND 6
PLAN AND ELEVATION

HORIZ. SCALE: AS SHOWN VERT. SCALE: AS SHOWN

STRUCTURE SHEET NO. S47
ACCT. NO. -
W.O. NO. -
R-4240
SHEET 133 OF 146
FILE NO.

DRAWING NAME: \\netapp1b02\b_projects\b318 (b13)\CADD\Sheet\STRUCTURE\635501S047.dwg
PLOT DATE: Sep 27, 2016 - 9:32am PLOTTED BY: dengh

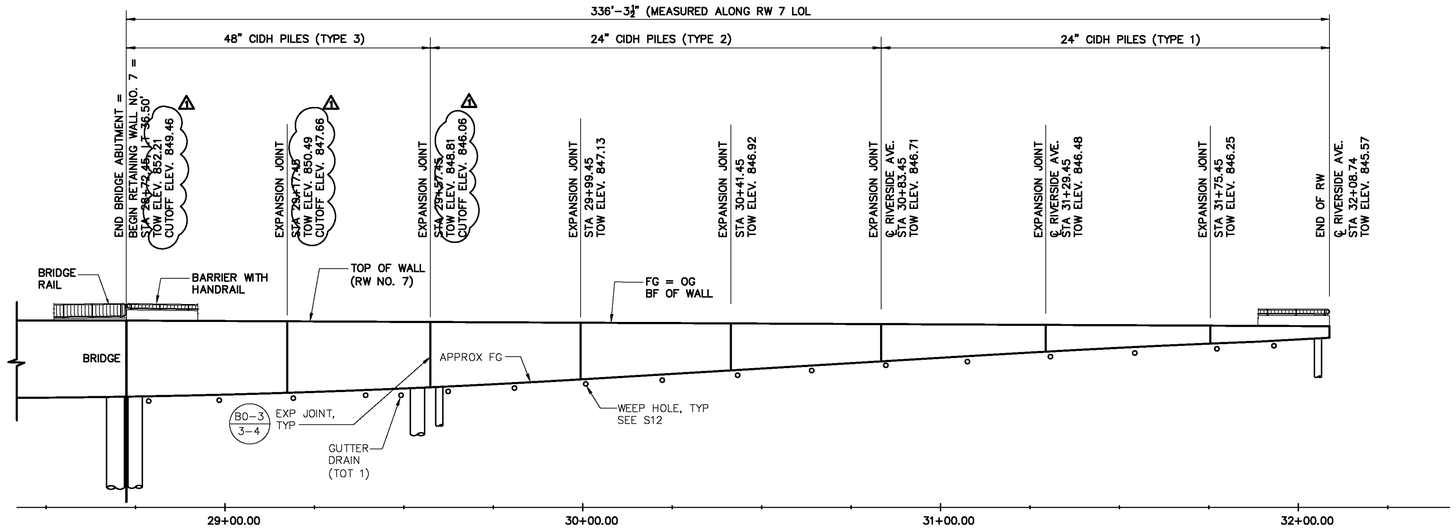

ELEVATION
SCALE: 1" = 20'

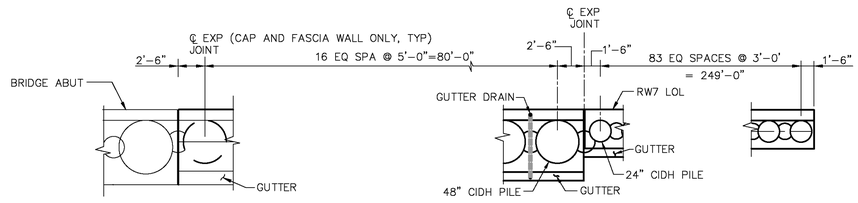

ENLARGED PLAN
N.T.S.

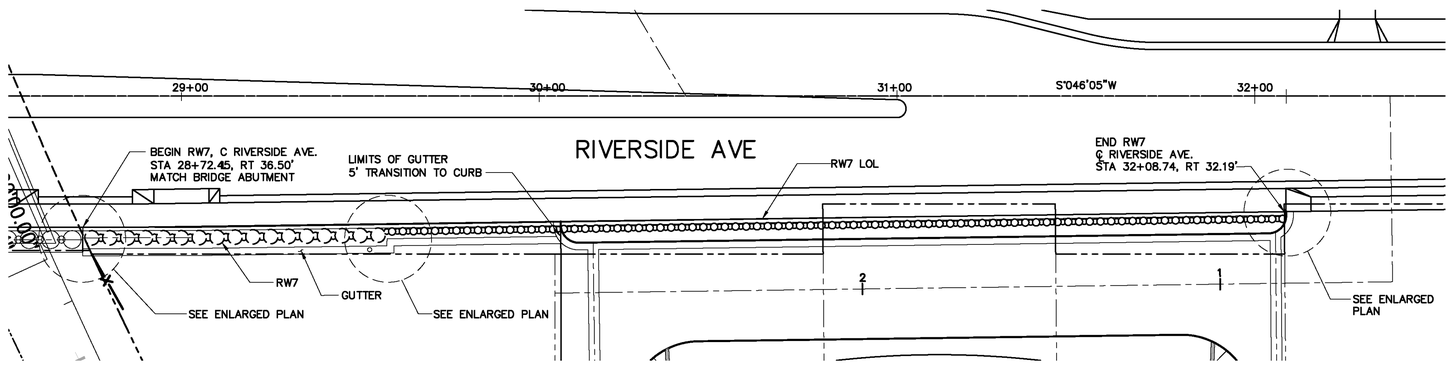

PLAN
SCALE: 1"= 20'

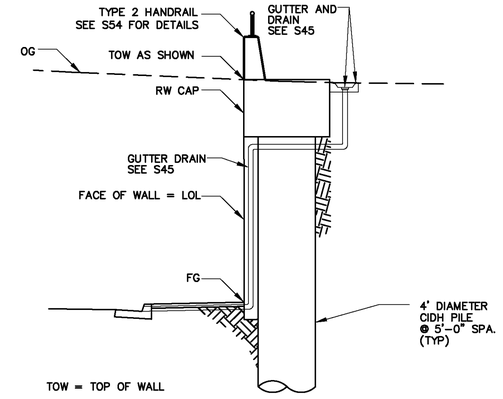

RETAINING WALL NO. 7
NO SCALE
(STA 28+72.45 TO STA 29+57.45)

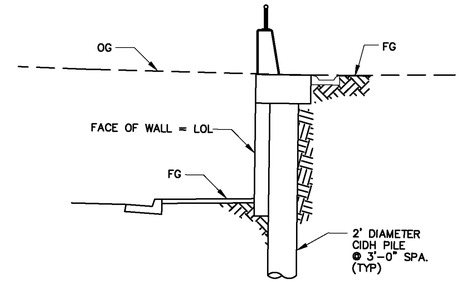

RETAINING WALL NO. 7
NO SCALE
(STA 29+57.45 TO 30+06.02)

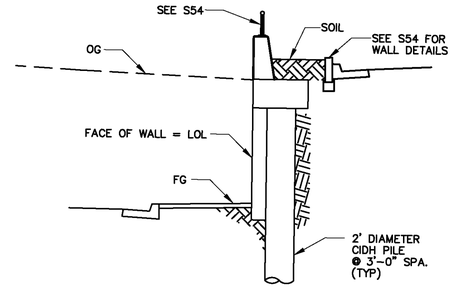

RETAINING WALL NO. 7
NO SCALE
(STA 30+06.02 TO STA 32+08.74)

ASBUILT
BID NO. 7185
COMPLETION DATE 03/25/2016
R.E. NAME BONAVENTURE EZEJI

20' 0' 20' 40'
SCALE: 1"=20'

DIGALERT
DIAL TOLL FREE 1-800-422-4133
AT LEAST TWO DAYS BEFORE YOU DIG
UNDERGROUND SERVICE ALERT OF SOUTHERN CALIFORNIA

MOFFATT & NICHOL
3780 KILROY AIRPORT WAY, SUITE 600
LONG BEACH, CALIFORNIA, 90806
562-426-9551
DATE

REGISTERED PROFESSIONAL ENGINEER — YONG DENG — NO. C55629 — EXP. 09/30/13 — CIVIL — STATE OF CALIFORNIA

MARK	REVISIONS	APPR.	DATE
⚠	AS BUILT		

DESIGNED BY RW DRAWN BY TP CHECKED BY MSN

UPRR BRIDGE 55.54 LOS ANGELES SUB
CITY OF RIVERSIDE, CALIFORNIA
PUBLIC WORKS DEPARTMENT
RIVERSIDE AVE UNDERPASS
RETAINING WALL 7
PLAN AND ELEVATION
HORIZ. SCALE: AS SHOWN VERT. SCALE: AS SHOWN

STRUCTURE SHEET NO. S48
ACCT. NO. -
W.O. NO. -
R-4240
SHEET 134 OF 146
FILE NO.

DRAWING NAME: \\netapp1b02\lb_projects\8318 lb13\CADD\Sheet\STRUCTURE\8355015048.dwg
PLOT DATE: Sep 27, 2016 - 8:32am PLOTTED BY: dleigh

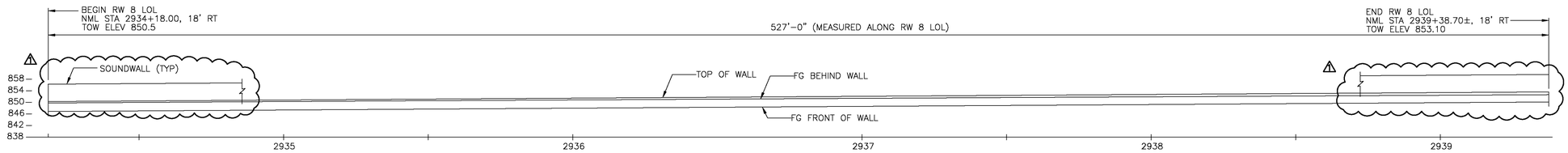

RW8

ELEVATION
SCALE: 1"= 20'

NOTE:

1. CONTRACTOR SHALL DETERMINE THE LOCATIONS AND LIMITS OF TEMPORARY SHORING AS REQUIRED FOR CONSTRUCTION OF THE SHOOFLY TRACK. FOR EACH LOCATION, CONTRACTOR SHALL SUBMIT TEMPORARY SHORING DESIGN AND SHOP DRAWINGS TO UPRR FOR APPROVAL. THE DESIGN CALCULATIONS SHALL BEAR THE SEAL OF A CALIFORNIA REGISTERED CIVIL OR STRUCTURAL ENGINEER.

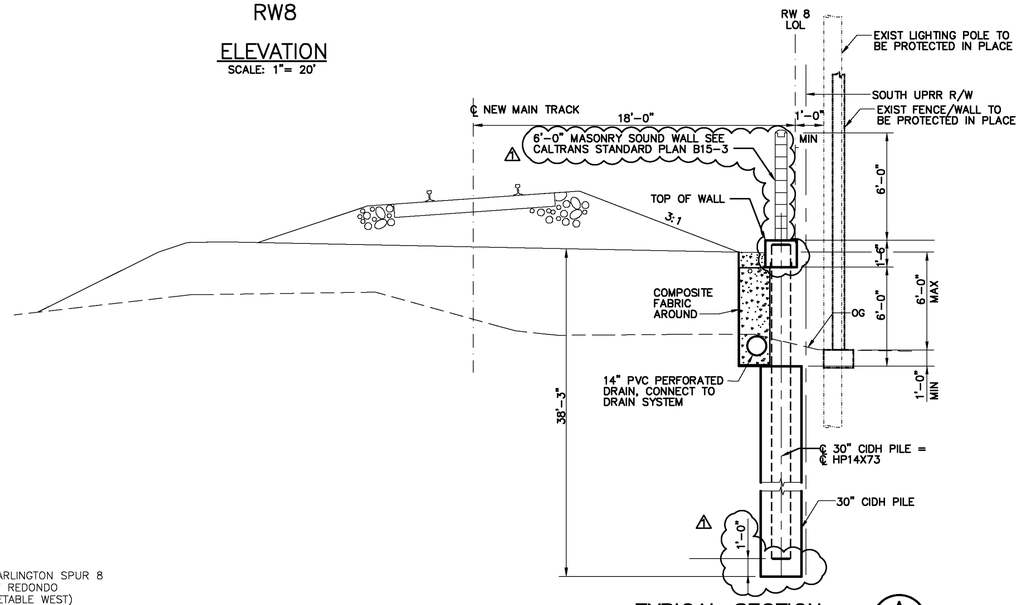

TYPICAL SECTION
(SEE SHEET S51 FOR MORE DETAILS NOT SHOWN)
SCALE: 1/4"=1'-0"
A S49 S49

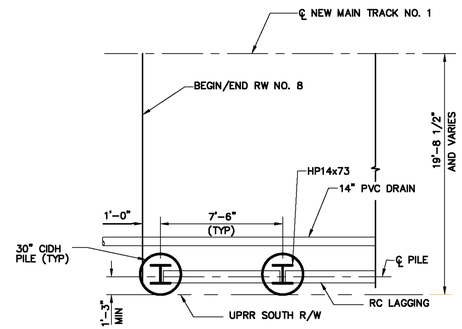

PARTIAL RW NO. 8 PLAN
SCALE: 1/4"=1'-0"

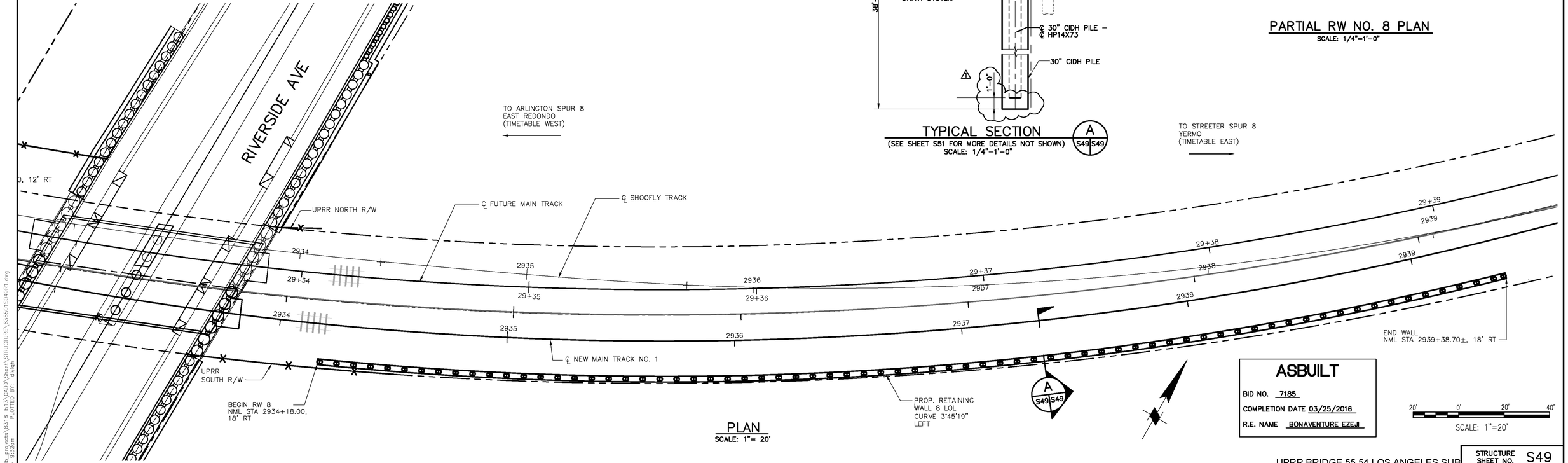

PLAN
SCALE: 1"= 20'

ASBUILT

BID NO. 7185
COMPLETION DATE 03/25/2016
R.E. NAME BONAVENTURE EZEJI

20' 0' 20' 40'
SCALE: 1"=20'

DIGALERT
DIAL TOLL FREE
1-800-422-4133
AT LEAST TWO DAYS BEFORE YOU DIG
UNDERGROUND SERVICE ALERT OF SOUTHERN CALIFORNIA

MOFFATT & NICHOL
3780 KILROY AIRPORT WAY, SUITE 600
LONG BEACH, CALIFORNIA, 90806
562-426-9551

DATE _____

REGISTERED PROFESSIONAL ENGINEER
YONG DENG
NO. C65629
EXP. 09/30/15
CIVIL
STATE OF CALIFORNIA

MARK	REVISIONS	APPR.	DATE
⚠	MASONRY SOUND WALL	YD	6/26/14

DESIGNED BY RW DRAWN BY TP CHECKED BY MSN

UPRR BRIDGE 55.54 LOS ANGELES SUB

CITY OF RIVERSIDE, CALIFORNIA
PUBLIC WORKS DEPARTMENT

RIVERSIDE AVE UNDERPASS

RETAINING WALL 8 PLAN AND ELEVATION

HORIZ. SCALE: AS SHOWN VERT. SCALE: AS SHOWN

STRUCTURE SHEET NO. S49
ACCT. NO. -
W.O. NO. -
R-4240
SHEET 135 OF 146
FILE NO.

DRAWING NAME: \\netapp1b02\b_projects\8318 ib13\CADD\Sheet\STRUCTURE\635501S049R1.dwg
PLOT DATE: Sep 27, 2016 - 9:32am PLOTTED BY: design

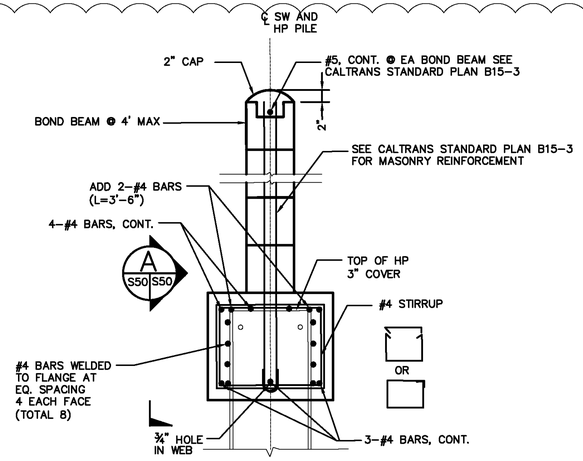

PILE CAP DETAILS

N.T.S.

NOTE: SHOP WELD SHOWN, AT CONTRACTOR'S OPTION, FIELD WELD IS ALLOWED

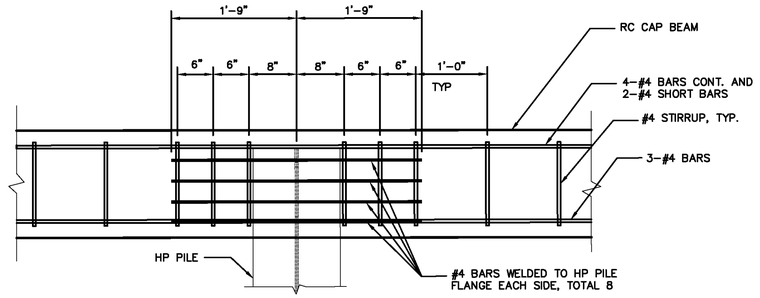

SECTION A

S50 S50

N.T.S.

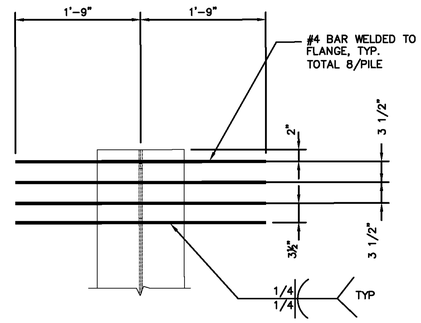

HP PILE HEAD DETAIL

N.T.S.

NOTE: SHOP WELD SHOWN, AT CONTRACTOR'S OPTION, FIELD WELD IS ALLOWED

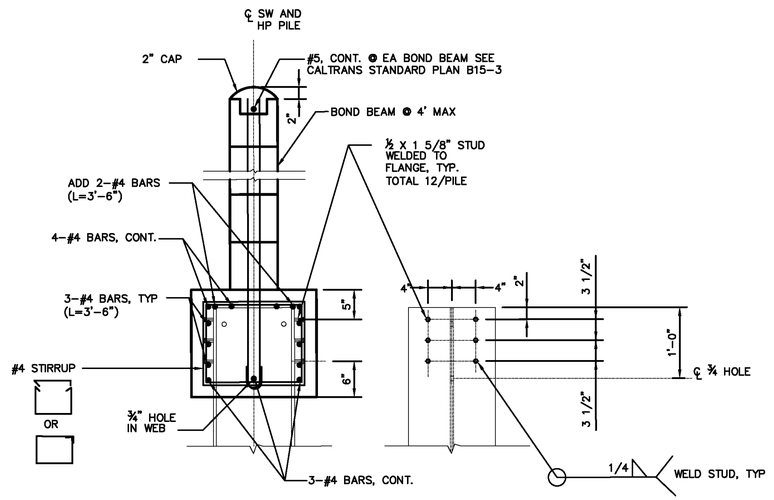

ALT PILE CAP AND PILE HEAD

N.T.S.

NOTE: SHOP WELD SHOWN, AT CONTRACTOR'S OPTION, FIELD WELD IS ALLOWED

NOTES:
1. SEE CALTRANS STANDARD PLANS B15-3 THRU B15-5 FOR DETAILS NOT SHOWN;
2. MASONRY BLOCK SHALL BE "ANGELUS BLOCK, SPLIT-FACE (BOTH SIDES), HARVEST COLOR" OR APPROVED EQUAL.
3. EXPANSIONS JOINT SHALL BE PLACED AT NOT MORE THAN 48'-0" SPACING, SEE B15-4 FOR EXPANSIONEXPANSION JPINT DETAILS.
4. CONCRETE MASONRY SHALL BE:
   FM' = 1500 PSI
   FB = 495 PSI
   FS = 24,000 PSI
   N = 25.8
5. CONCRETE SHALL BE;
   FC'=4,000 PSI
   FY = 60,000 PSI
   CONCRETE COVER 2" UNLESS OTHERWISE NOTED.

ASBUILT

BID NO. 7185

COMPLETION DATE 03/25/2016

R.E. NAME BONAVENTURE EZEJI

DIGALERT
DIAL TOLL FREE
1-800-422-4133
AT LEAST TWO DAYS BEFORE YOU DIG
UNDERGROUND SERVICE ALERT OF SOUTHERN CALIFORNIA

MOFFATT & NICHOL
3780 KILROY AIRPORT WAY, SUITE 600
LONG BEACH, CALIFORNIA, 90806
562-426-9551

DATE

REGISTERED PROFESSIONAL ENGINEER
YONG DENG
NO. C65629
EXP. 09/30/15
CIVIL
STATE OF CALIFORNIA

MARK	REVISIONS	APPR.	DATE
⚠	ADDED CAP BEAM DETAILS	YD	6/26/14

DESIGNED BY RW DRAWN BY TP CHECKED BY MSN

UPRR BRIDGE 55.54 LOS ANGELES SUB

CITY OF RIVERSIDE, CALIFORNIA
PUBLIC WORKS DEPARTMENT

RIVERSIDE AVE UNDERPASS

RETAINING WALL 8 DETAILS (1 OF 2)

HORIZ. SCALE: AS SHOWN VERT. SCALE: AS SHOWN

STRUCTURE SHEET NO. S50

ACCT. NO. -
W.O. NO. -

R-4240

SHEET 136 OF 146

FILE NO.

DRAWING NAME: \\netappbp02\lb_projects\8318 lb13\CADD\Sheet\STRUCTURE\635501SD50R1.dwg
PLOT DATE: Sep 27, 2016 - 9:33am PLOTTED BY: dleigh

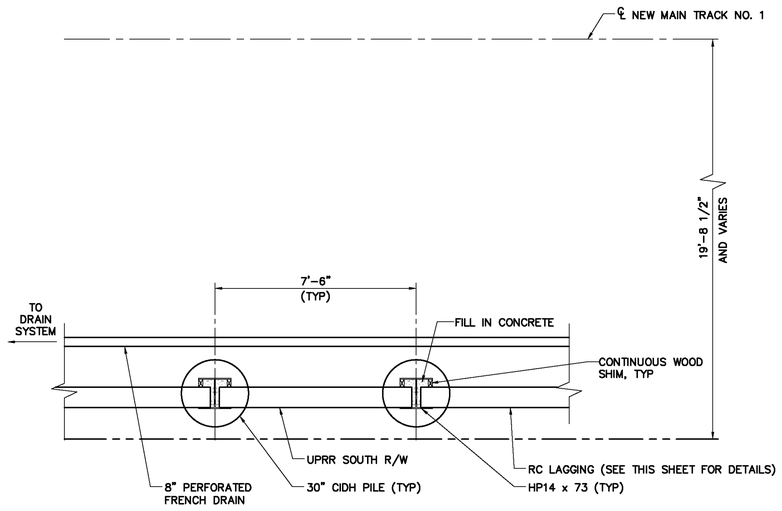

PARTIAL RW 8 PLAN
3/8"=1'-0"

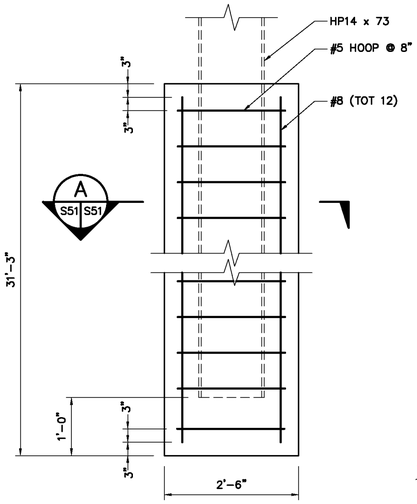

30" CIDH PILE
3/4"=1'-0"

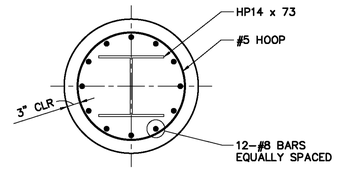

SECTION A
S51 S51
3/4"=1'-0"

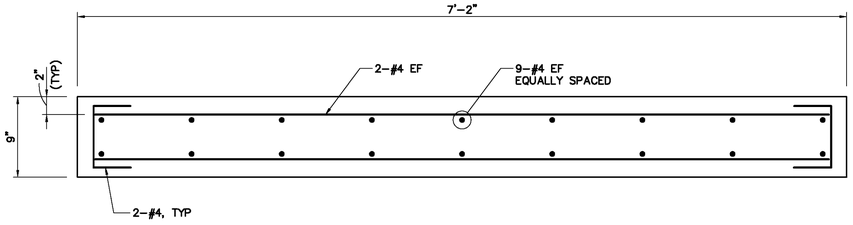

RC LAGGING DETAILS
1 1/2"=1'-0"

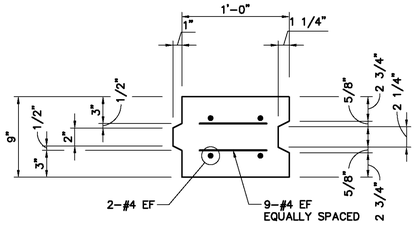

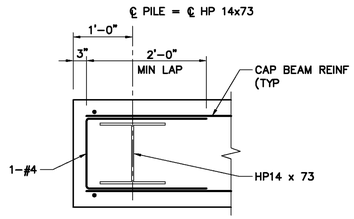

CAP BEAM END DETAIL
NOT TO SCALE

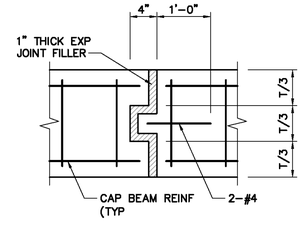

CAP BEAM EXPANSION JOINT DETAIL
(60' MAX SPACING)
NOT TO SCALE

ASBUILT

BID NO. 7185

COMPLETION DATE 03/25/2016

R.E. NAME BONAVENTURE EZEJI

2'-0" 0'-0" 6" 1'-0"
SCALE: 1 1/2"=1'-0"

2'-0" 0'-0" 1'-0" 2'-0"
SCALE: 3/4"=1'-0"

4'-0" 0'-0" 2'-0" 4'-0"
SCALE: 3/8"=1'-0"

DRAWING NAME: \\retopplb02\lb_projects\6318 lts13\CADD\Sheet\STRUCTURE\635501S051R1.dwg
PLOT DATE: Sep 27, 2016 - 9:53am PLOTTED BY: dleigh

DIGALERT
DIAL TOLL FREE
1-800-422-4133
AT LEAST TWO DAYS BEFORE YOU DIG
UNDERGROUND SERVICE ALERT OF SOUTHERN CALIFORNIA

MOFFATT & NICHOL
3780 KILROY AIRPORT WAY, SUITE 600
LONG BEACH, CALIFORNIA, 90806
562-426-9551

DATE _____

REGISTERED PROFESSIONAL ENGINEER
YONG DENG
NO. C65629
EXP. 09/30/15
CIVIL
STATE OF CALIFORNIA

MARK	REVISIONS	APPR.	DATE
1	MOVE AND REVISED CAP BEAM DETAIL TO S50	YD	6/26/14

DESIGNED BY RW DRAWN BY TP CHECKED BY MSN

UPRR BRIDGE 55.54 LOS ANGELES SUB

CITY OF RIVERSIDE, CALIFORNIA
PUBLIC WORKS DEPARTMENT

RIVERSIDE AVE UNDERPASS

RETAINING WALL 8 DETAILS (2 OF 2)

HORIZ. SCALE: AS SHOWN VERT. SCALE: AS SHOWN

STRUCTURE SHEET NO. S51
ACCT. NO. -
W.O. NO. -
R-4240
SHEET 137 OF 146
FILE NO.

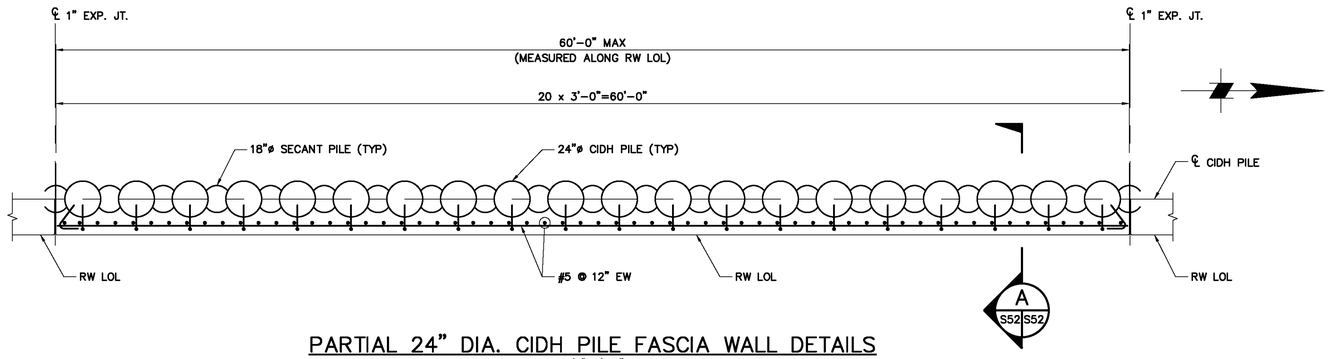

PARTIAL 24" DIA. CIDH PILE FASCIA WALL DETAILS

1/4"=1'-0"

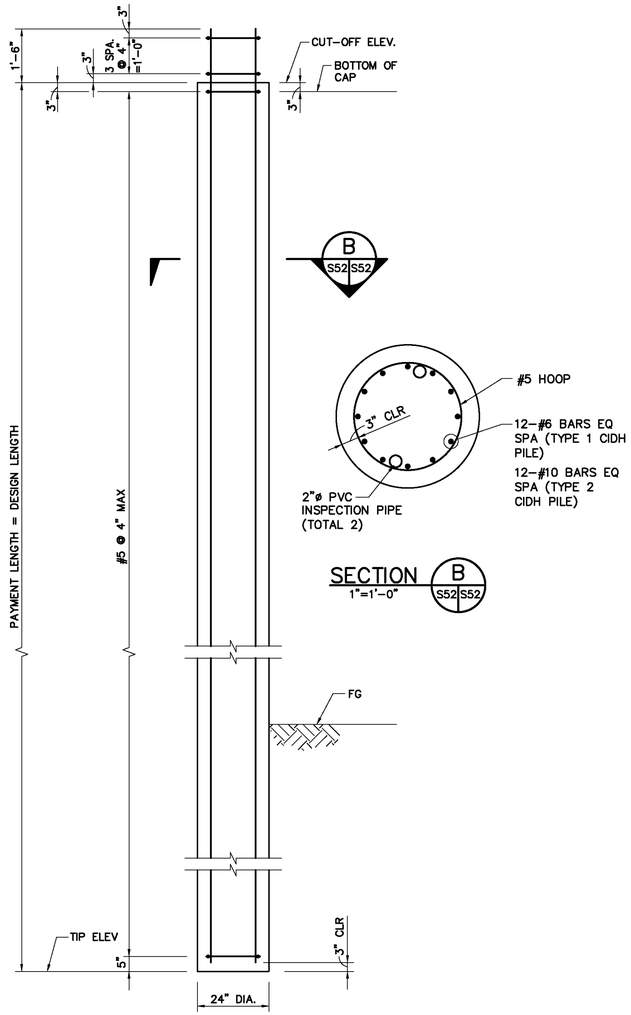

SECTION B S52 S52

1"=1'-0"

24" CIDH PILE DETAILS

1/2"=1'-0"

(TYPE 1 AND 2, SEE S43 THRU S48 FOR LOCATIONS)

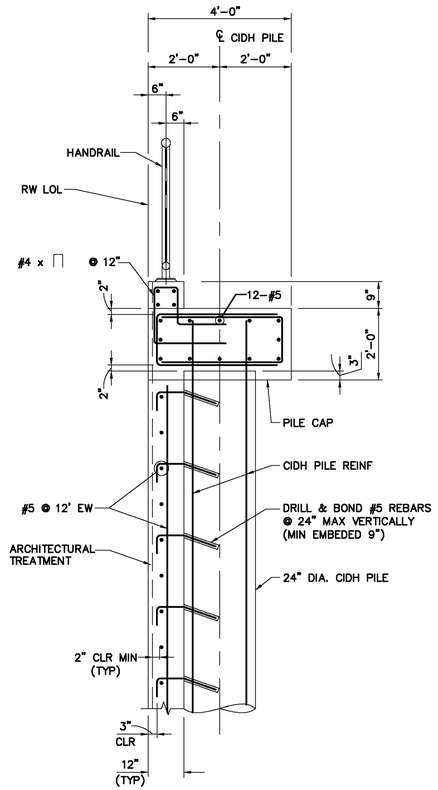

SECTION A S52 S52

1/2"=1'-0"

ASBUILT

BID NO. 7185

COMPLETION DATE 03/25/2016

R.E. NAME BONAVENTURE EZEJI

4'-0" 0'-0" 4'-0" 8'-0"

SCALE: 1/4"=1'-0"

2'-0" 0'-0" 2'-0" 4'-0"

SCALE: 1/2"=1'-0"

DIGALERT
DIAL TOLL FREE
1-800-422-4133
AT LEAST TWO DAYS BEFORE YOU DIG
UNDERGROUND SERVICE ALERT OF SOUTHERN CALIFORNIA

MOFFATT & NICHOL
3780 KILROY AIRPORT WAY, SUITE 600
LONG BEACH, CALIFORNIA, 90806
562-426-9551

DATE _____

REGISTERED PROFESSIONAL ENGINEER
YONG DENG
NO. C65629
EXP. 09/30/13
CIVIL
STATE OF CALIFORNIA

MARK	REVISIONS	APPR.	DATE

DESIGNED BY RW DRAWN BY TP CHECKED BY MSN

UPRR BRIDGE 55.54 LOS ANGELES SUB

CITY OF RIVERSIDE, CALIFORNIA
PUBLIC WORKS DEPARTMENT

RIVERSIDE AVE UNDERPASS

24" DIA. CIDH PILE DETAILS

HORIZ. SCALE: AS SHOWN VERT. SCALE: AS SHOWN

STRUCTURE SHEET NO. S52

ACCT. NO. -
W.O. NO. -

R-4240

SHEET 138 OF 146

FILE NO.

DRAWING NAME: \\retopplb02\b_projects\b318 (b13\CADD\Sheet\STRUCTURE\635501S052.dwg
PLOT DATE: Sep 27, 2016 - 9:33am PLOTTED BY: dengh

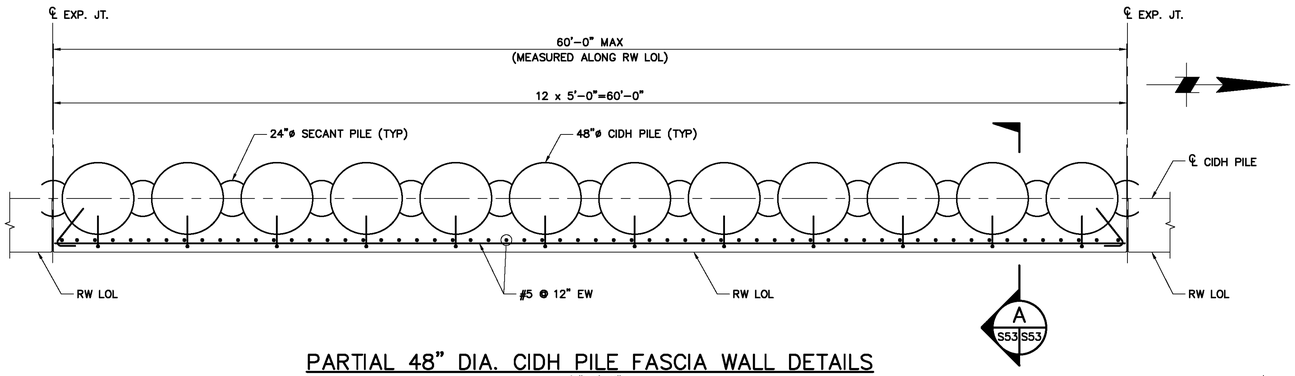

PARTIAL 48" DIA. CIDH PILE FASCIA WALL DETAILS

1/4"=1'-0"

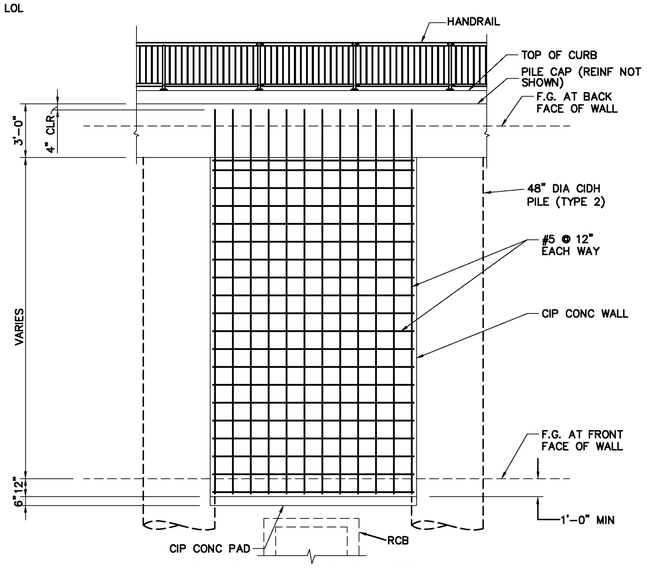

SLAB WALL ELEVATION

1/4"=1'-0"

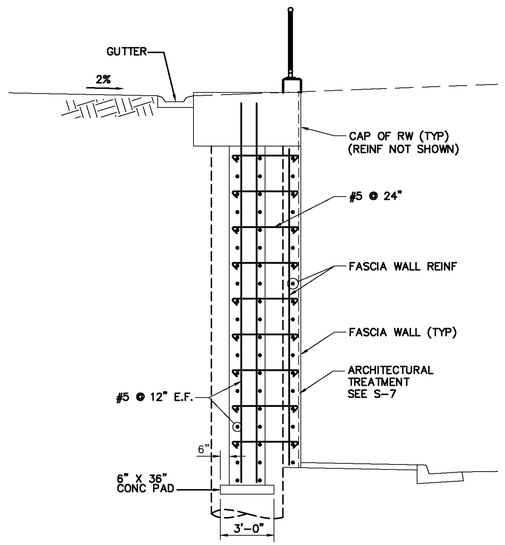

SECTION C

1/4"=1'-0"

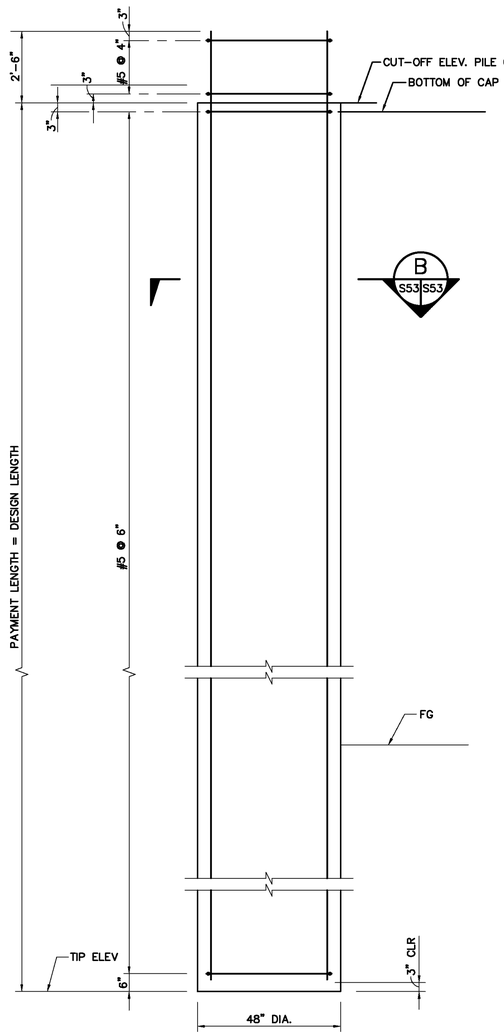

TYPICAL 48" CIDH PILE DETAILS

1/2"=1'-0"

(TYPE 3 AND 4, SEE S43 THRU S48 FOR LOCATIONS)

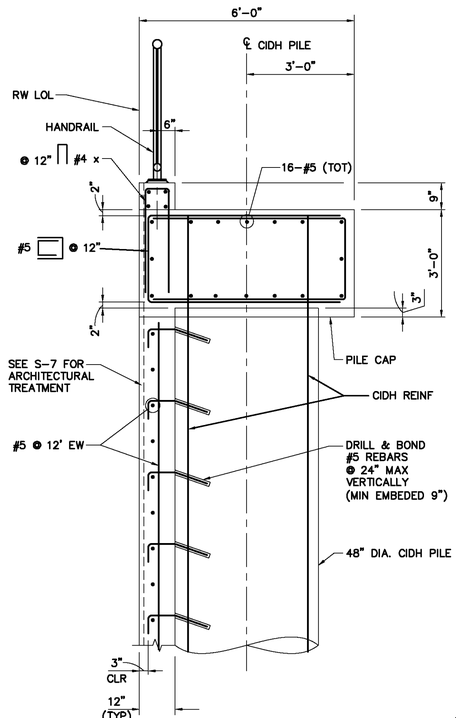

SECTION A

1/2"=1'-0"

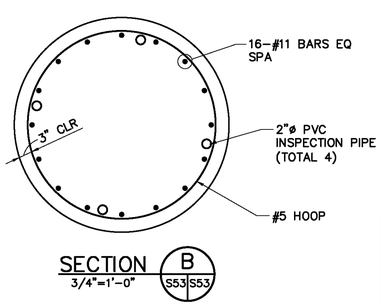

SECTION B

3/4"=1'-0"

(TYP 3 CIDH PILE)

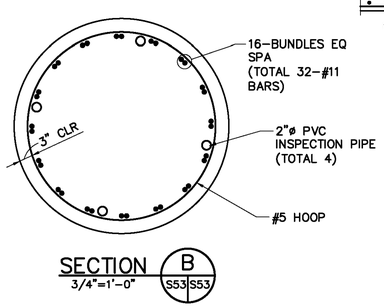

SECTION B

3/4"=1'-0"

(TYP 4 CIDH PILE)

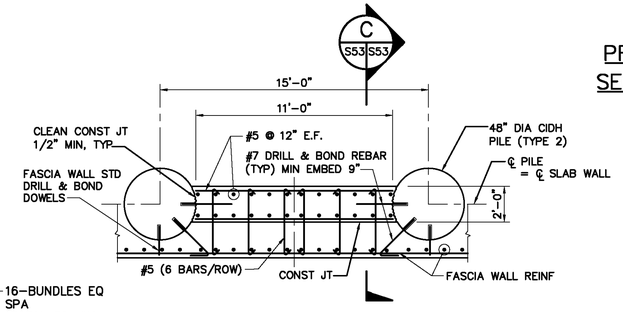

SLAB WALL PLAN

1/4"=1'-0"

PROPOSED CONSTRUCTION SEQUENCE FOR SLAB WALL

1. CONSTRUCT 24" SECANT PILE
2. CONSTRUCT CIDH PILES
3. INSTALL SHORING FOR RCB CONSTRUCTION
4. EXCAVATE FINISH GRADE
5. PROVIDE BRACING FOR CIDH PILE AT PILE CAP LOCATION
6. CONTINUE EXCAVATION TO BOTTOM OF RCB
7. INSTALL RCB
8. BACKFILL RCB TO FINISH GRADE
9. CONSTRUCT SLAB WALL 1
10. BACKFILL SLAB WALL TO THE ORIGINAL GRADE AT BACK OF SLAB WALL
11. CONSTRUCT FASCIA WALL

ASBUILT

BID NO. 7185

COMPLETION DATE 03/25/2016

R.E. NAME BONAVENTURE EZEJI

4'-0" 0'-0" 4'-0" 8'-0"
SCALE: 1/4"=1'-0"

2'-0" 0'-0" 2'-0" 4'-0"
SCALE: 1/2"=1'-0"

2'-0" 0'-0" 1'-0" 2'-0"
SCALE: 3/4"=1'-0"

DIGALERT
DIAL TOLL FREE
1-800-422-4133
AT LEAST TWO DAYS BEFORE YOU DIG
UNDERGROUND SERVICE ALERT OF SOUTHERN CALIFORNIA

MOFFATT & NICHOL
3780 KILROY AIRPORT WAY, SUITE 600
LONG BEACH, CALIFORNIA, 90806
562-426-9551

REGISTERED PROFESSIONAL ENGINEER
YONG DENG
NO. C65629
EXP. 09/30/13
CIVIL
STATE OF CALIFORNIA

DATE

MARK	REVISIONS	APPR.	DATE

DESIGNED BY RW DRAWN BY TP CHECKED BY MSN

UPRR BRIDGE 55.54 LOS ANGELES SUB

CITY OF RIVERSIDE, CALIFORNIA
PUBLIC WORKS DEPARTMENT

RIVERSIDE AVE UNDERPASS

48" DIA. CIDH PILE DETAILS

HORIZ. SCALE: AS SHOWN VERT. SCALE: AS SHOWN

STRUCTURE SHEET NO. S53

ACCT. NO. -
W.O. NO. -

R-4240

SHEET 139 OF 146

FILE NO.

DRAWING NAME: \\netapp1b02\lb_projects\8318_b13\CADD\Sheet\STRUCTURE\635501S053.dwg
PLOT DATE: Sep 27, 2016 - 9:35am PLOTTED BY: dlengh

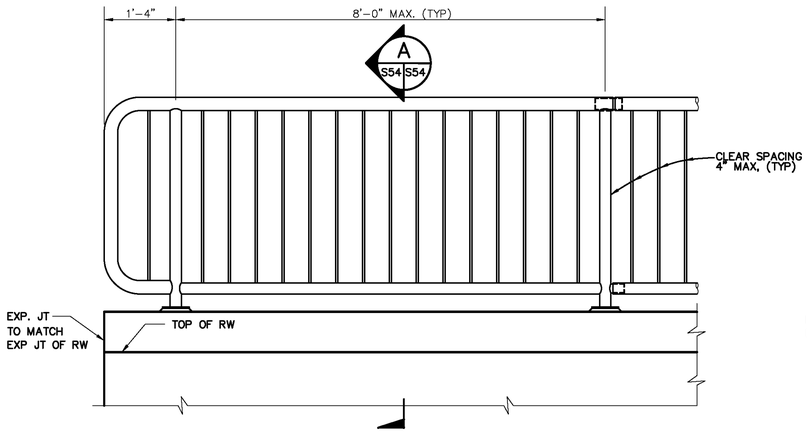

RAILING ELEVATION WITHOUT BARRIER (TYPE 1)

SCALE: 3/4"= 1'-0"

(SEE S40 FOR DETAILS NOT SHOWN)

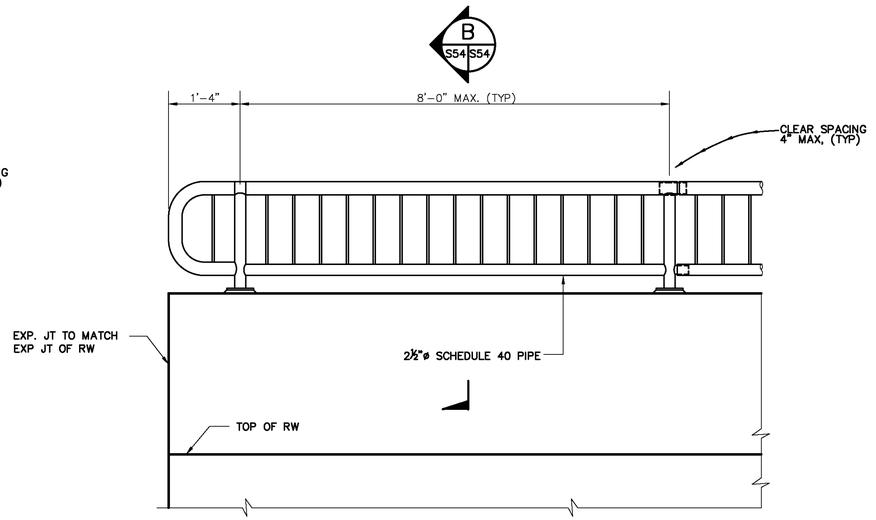

RAILING ELEVATION WITH BARRIER (TYPE 2)

SCALE: 3/4"= 1'-0"

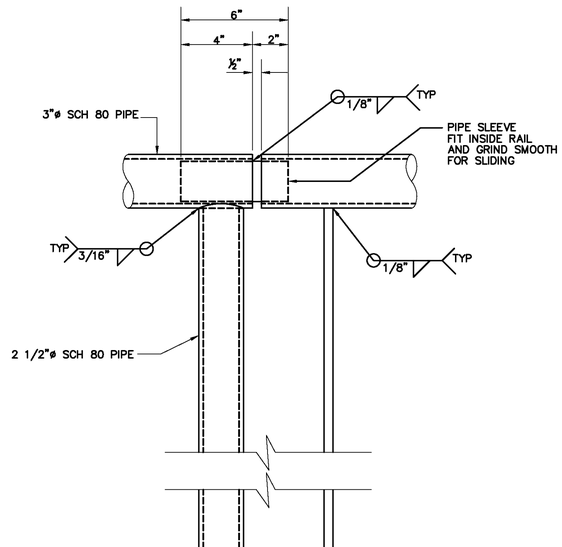

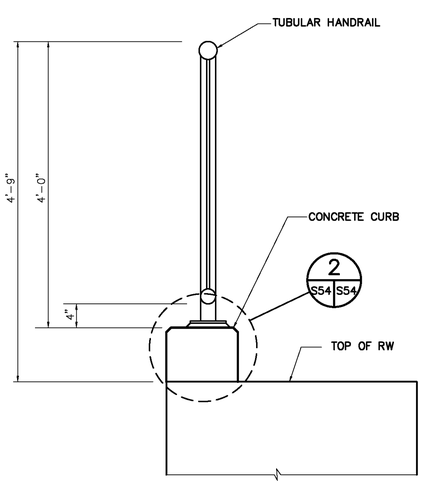

SECTION A

1"=1'-0"

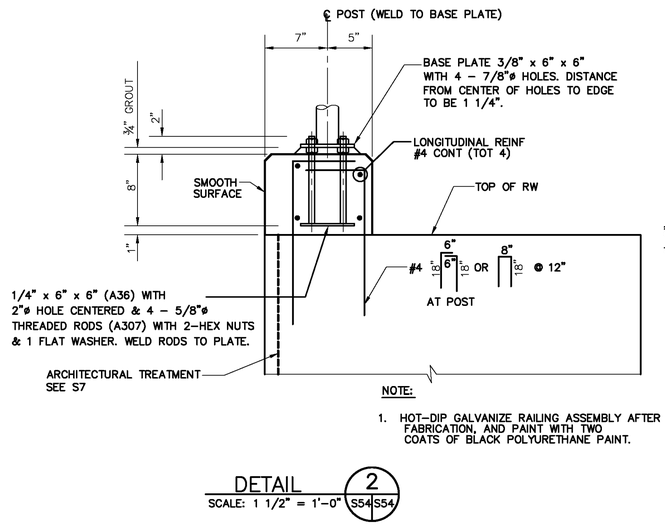

NOTE:

1. HOT–DIP GALVANIZE RAILING ASSEMBLY AFTER FABRICATION, AND PAINT WITH TWO COATS OF BLACK POLYURETHANE PAINT.

DETAIL 2

SCALE: 1 1/2" = 1'-0" S54 S54

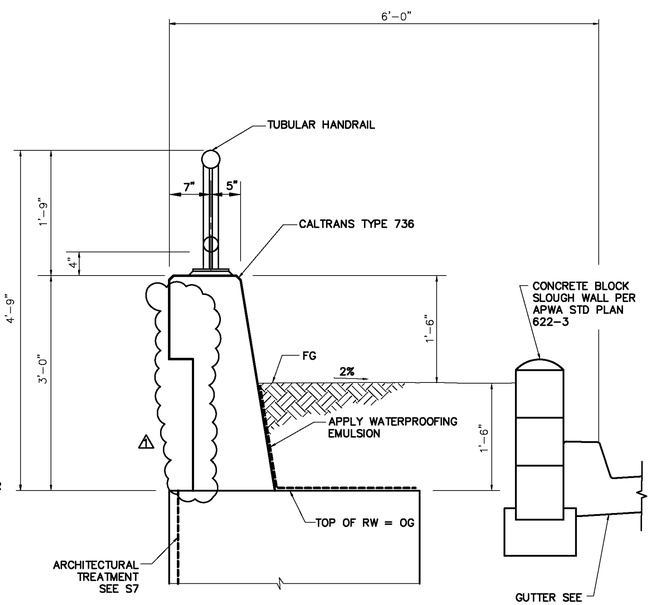

SECTION B

1"=1'-0"

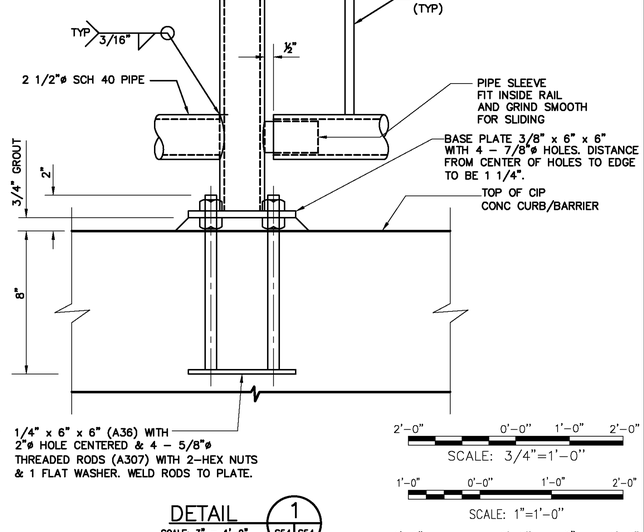

DETAIL 1

SCALE: 3" = 1'-0"

2'–0" 0'–0" 1'–0" 2'–0"
SCALE: 3/4"=1'–0"

1'–0" 0'–0" 1'–0" 2'–0"
SCALE: 1"=1'–0"

1'–0" 0'–0" 6" 1'–0"
SCALE: 1 1/2"=1'–0"

6" 0'–0" 3" 6"
SCALE: 3"=1'–0"

ASBUILT

BID NO. 7185

COMPLETION DATE 03/25/2016

R.E. NAME BONAVENTURE EZEJI

DIGALERT
DIAL TOLL FREE
1-800-422-4133
AT LEAST TWO DAYS BEFORE YOU DIG
UNDERGROUND SERVICE ALERT OF SOUTHERN CALIFORNIA

MOFFATT & NICHOL
3780 KILROY AIRPORT WAY, SUITE 600
LONG BEACH, CALIFORNIA, 90806
562-426-9551

DATE _____

REGISTERED PROFESSIONAL ENGINEER
YONG DENG
NO. C65629
EXP. 09/30/13
CIVIL
STATE OF CALIFORNIA

MARK	REVISIONS	APPR.	DATE
1	ELIMINATED BARRIER ARCHITECTURAL TREATMENT	YD	10/16/13

DESIGNED BY RW DRAWN BY TP CHECKED BY MSN

UPRR BRIDGE 55.54 LOS ANGELES SUB

CITY OF RIVERSIDE, CALIFORNIA
PUBLIC WORKS DEPARTMENT

RIVERSIDE AVE UNDERPASS

RW STEEL HANDRAIL DETAILS

HORIZ. SCALE: AS SHOWN VERT. SCALE: AS SHOWN

STRUCTURE SHEET NO. S54

ACCT. NO. –
W.O. NO. –

R–4240

SHEET 140 OF 146

FILE NO.

DRAWING NAME: \\netapp1b02\1b_projects\&318 lb13\CADD\Sheet\STRUCTURE\&35501S054_Addendum1.dwg
PLOT DATE: Sep 27, 2016 – 9:43am PLOTTED BY: dleigh

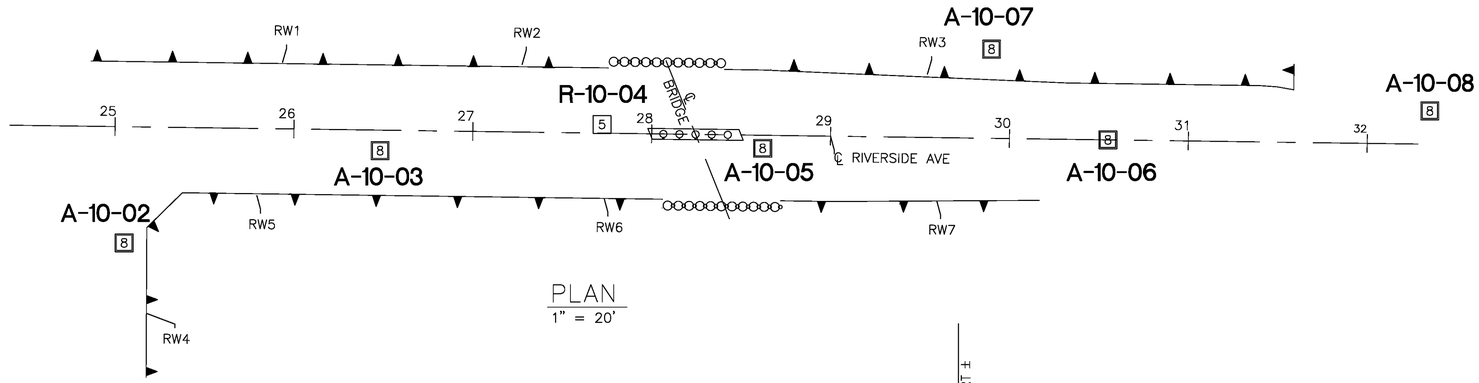

PLAN
1" = 20'

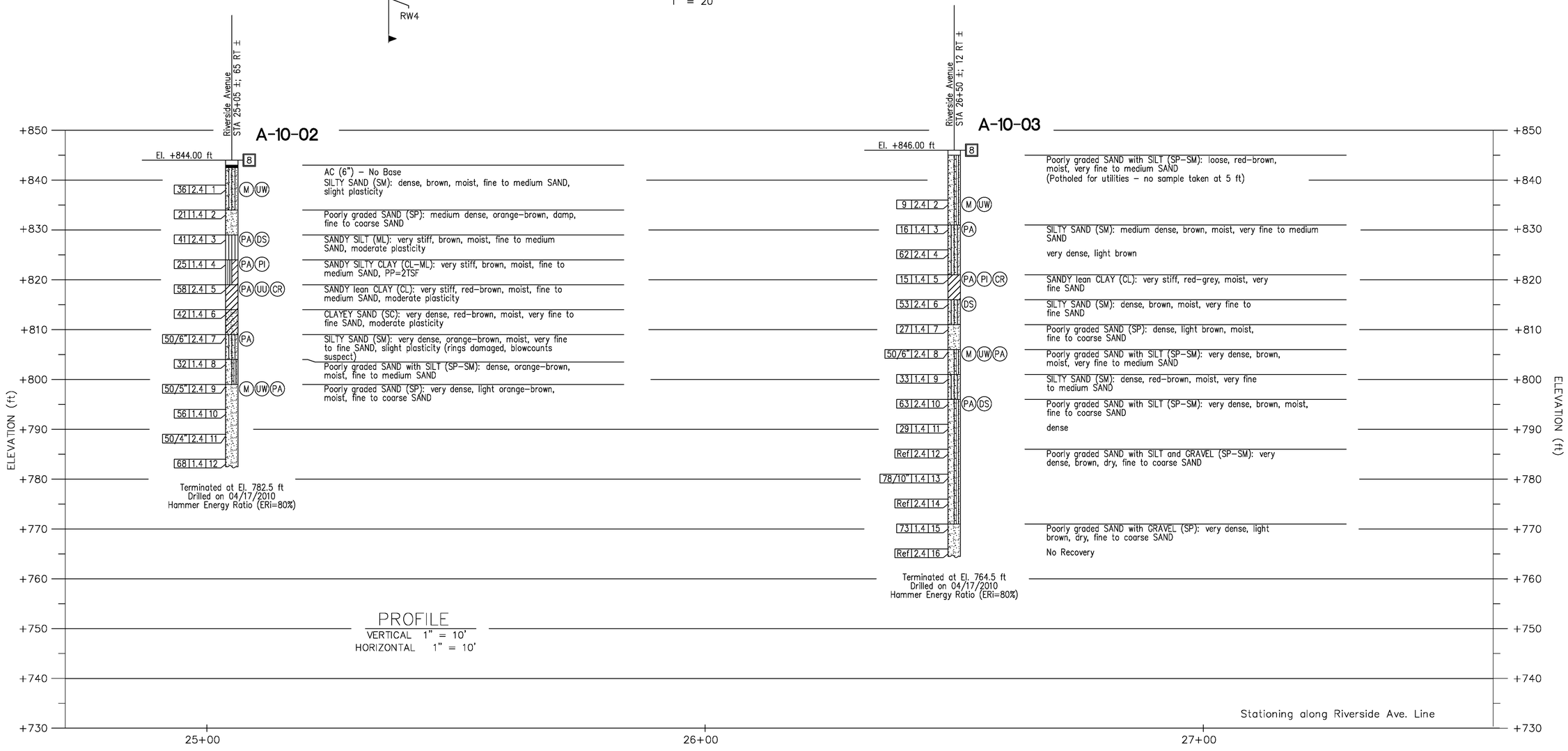

ASBUILT

BID NO. 7185

COMPLETION DATE 03/25/2016

R.E. NAME BONAVENTURE EZEJI

DIGALERT
DIAL TOLL FREE
1-800-422-4133
AT LEAST TWO DAYS BEFORE YOU DIG
UNDERGROUND SERVICE ALERT OF SOUTHERN CALIFORNIA

Earth Mechanics, Inc.
Geotechnical and Earthquake Engineering
17800 Newhope St., Ste. B
Fountain Valley, CA 92708
DATE

REGISTERED PROFESSIONAL ENGINEER
ERIC BROWN
NO. GE 2806
EXP. 6-30-2014
GEOTECHNICAL
STATE OF CALIFORNIA

MARK	REVISIONS	APPR.	DATE

DESIGNED BY - DRAWN BY - CHECKED BY -

BRIDGE #: 56C0601

UPRR BRIDGE 55.54 LOS ANGELES SUB

CITY OF RIVERSIDE, CALIFORNIA
PUBLIC WORKS DEPARTMENT

RIVERSIDE AVE UNDERPASS

LOG OF TEST BORINGS 1 OF 6

HORIZ. SCALE: AS SHOWN VERT. SCALE: AS SHOWN

STRUCTURE SHEET NO. S55

ACCT. NO. -
W.O. NO. -

R-4240

SHEET 141 OF 146

FILE NO.

DRAWING NAME: X:\Projects\2010\10-102 - M&N_Riverside Ave. Grade Separation\Pal\LOTB\Final LOTBs\Riverside Avenue Walls LOTB 1 of 6 130621.dwg
PLOT DATE: Jun 21, 2013 - 2:46pm PLOTTED BY: mhashiyama

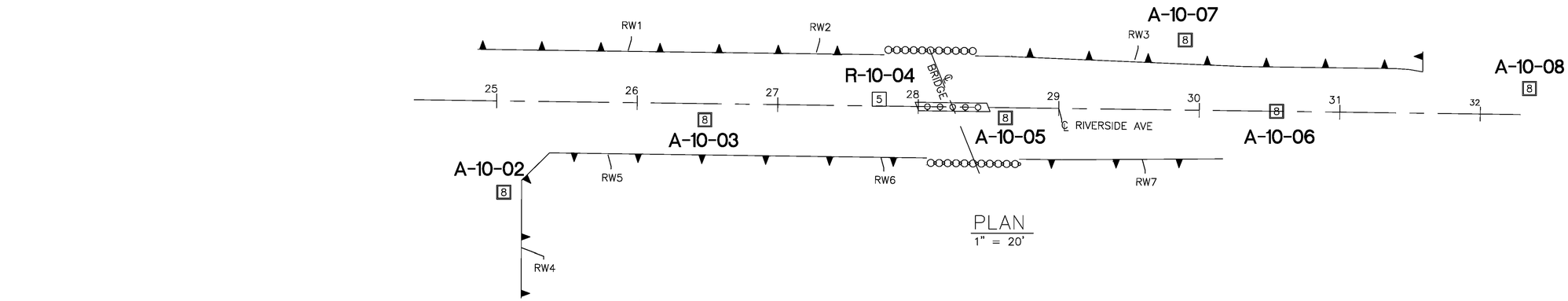

PLAN
1" = 20'

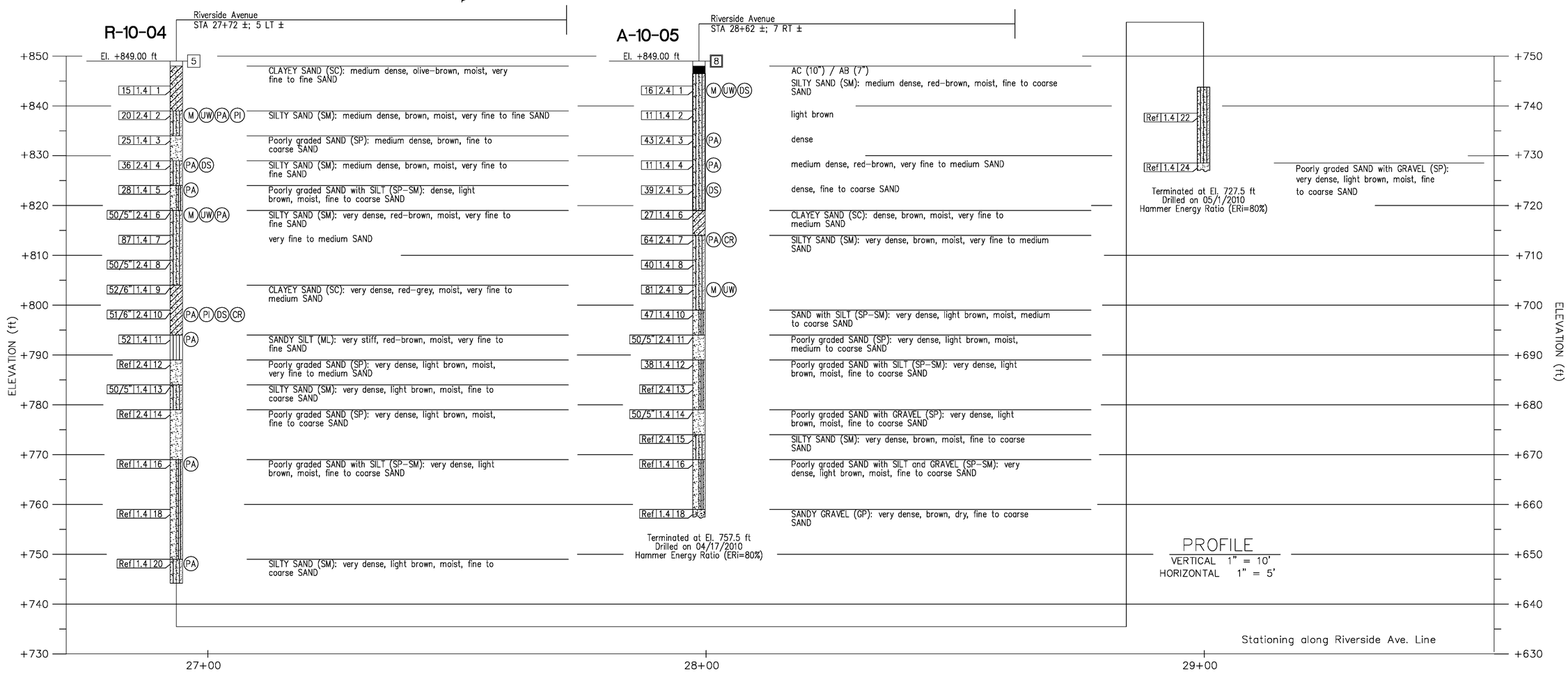

PROFILE
VERTICAL 1" = 10'
HORIZONTAL 1" = 5'

ASBUILT

BID NO. 7185
COMPLETION DATE 03/25/2016
R.E. NAME BONAVENTURE EZEJI

DIGALERT
DIAL TOLL FREE
1-800-422-4133
AT LEAST TWO DAYS BEFORE YOU DIG
UNDERGROUND SERVICE ALERT OF SOUTHERN CALIFORNIA

Earth Mechanics, Inc.
Geotechnical and Earthquake Engineering
17800 Newhope St., Ste. B
Fountain Valley, CA 92708
DATE

REGISTERED PROFESSIONAL ENGINEER
ERIC BROWN
NO. GE 2806
EXP. 6-30-2014
GEOTECHNICAL
STATE OF CALIFORNIA

MARK	REVISIONS	APPR.	DATE

DESIGNED BY - DRAWN BY - CHECKED BY -

BRIDGE #: 56C0601

UPRR BRIDGE 55.54 LOS ANGELES SUB

CITY OF RIVERSIDE, CALIFORNIA
PUBLIC WORKS DEPARTMENT

RIVERSIDE AVE UNDERPASS

LOG OF TEST BORINGS 2 OF 6

HORIZ. SCALE: AS SHOWN VERT. SCALE: AS SHOWN

STRUCTURE SHEET NO. S56
ACCT. NO. -
W.O. NO. -
R-4240
SHEET 142 OF 146
FILE NO.

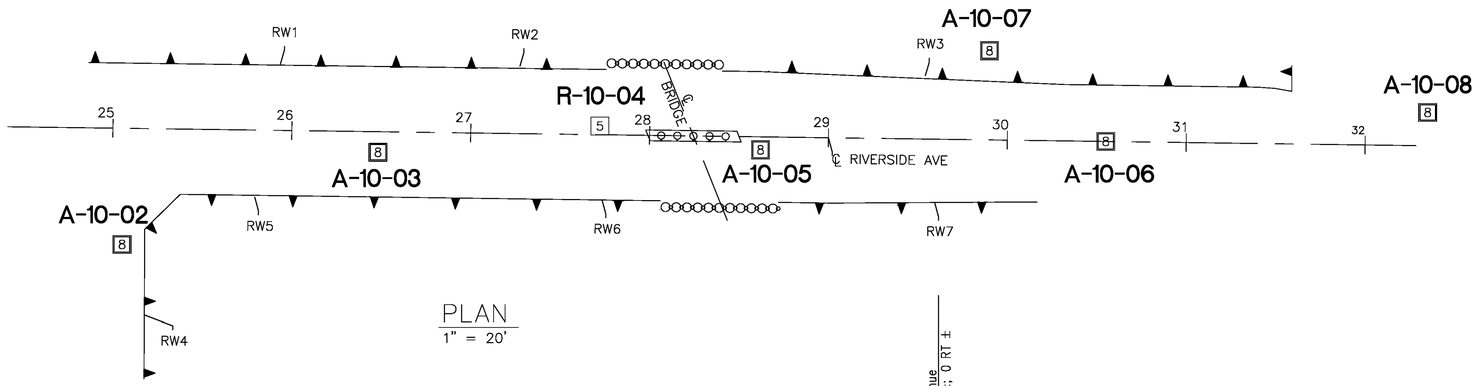

PLAN
1" = 20'

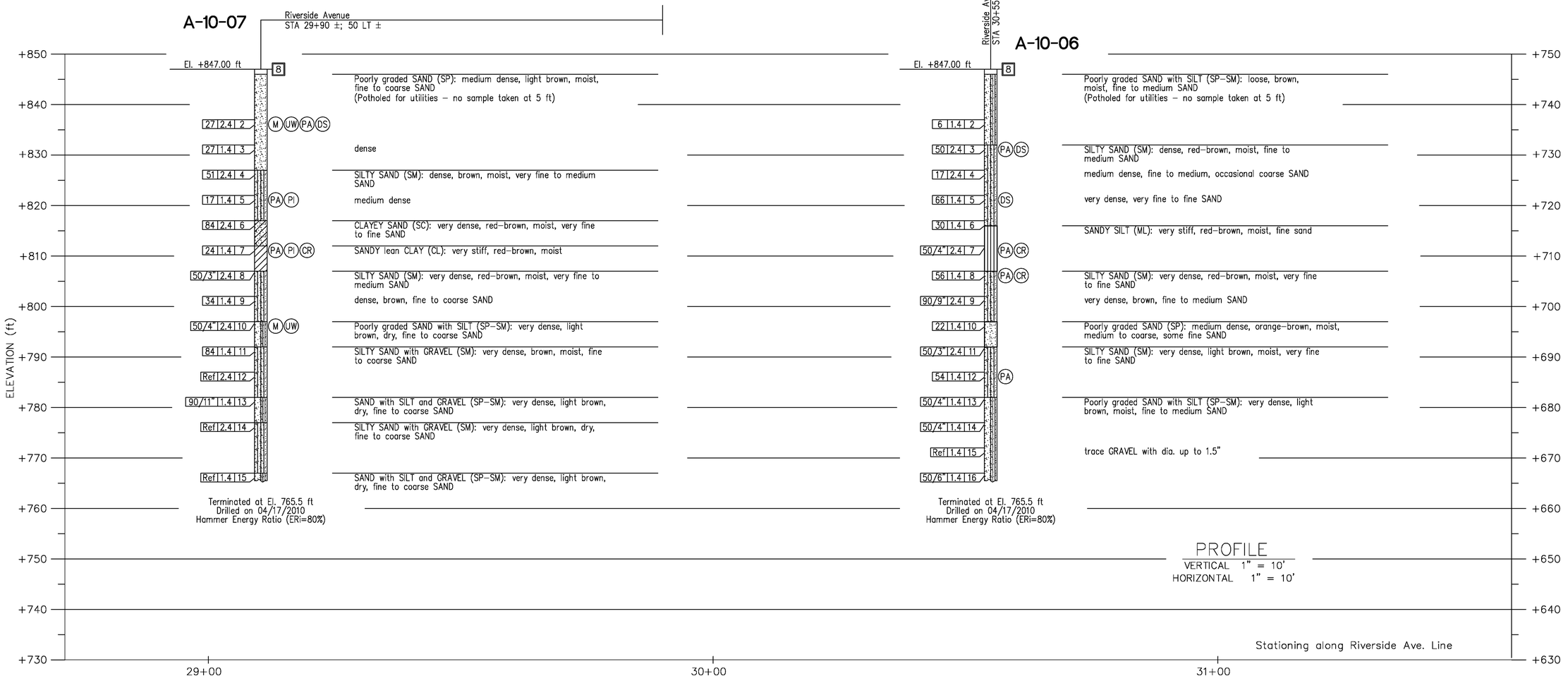

PROFILE
VERTICAL 1" = 10'
HORIZONTAL 1" = 10'

ASBUILT

BID NO. 7185
COMPLETION DATE 03/25/2016
R.E. NAME BONAVENTURE EZEJI

DIGALERT
DIAL TOLL FREE
1-800-422-4133
AT LEAST TWO DAYS BEFORE YOU DIG
UNDERGROUND SERVICE ALERT OF SOUTHERN CALIFORNIA

Earth Mechanics, Inc.
Geotechnical and Earthquake Engineering
17800 Newhope St., Ste. B
Fountain Valley, CA 92708
DATE

REGISTERED PROFESSIONAL ENGINEER
ERIC BROWN
No. GE 2806
EXP. 6-30-2014
GEOTECHNICAL
STATE OF CALIFORNIA

MARK	REVISIONS	APPR.	DATE

DESIGNED BY - DRAWN BY - CHECKED BY -

BRIDGE #: 56C0601

UPRR BRIDGE 55.54 LOS ANGELES SUB

CITY OF RIVERSIDE, CALIFORNIA
PUBLIC WORKS DEPARTMENT

RIVERSIDE AVE UNDERPASS

LOG OF TEST BORINGS 3 OF 6

HORIZ. SCALE: AS SHOWN VERT. SCALE: AS SHOWN

STRUCTURE SHEET NO. S57
ACCT. NO. -
W.O. NO. -
R-4240
SHEET 143 OF 146
FILE NO.

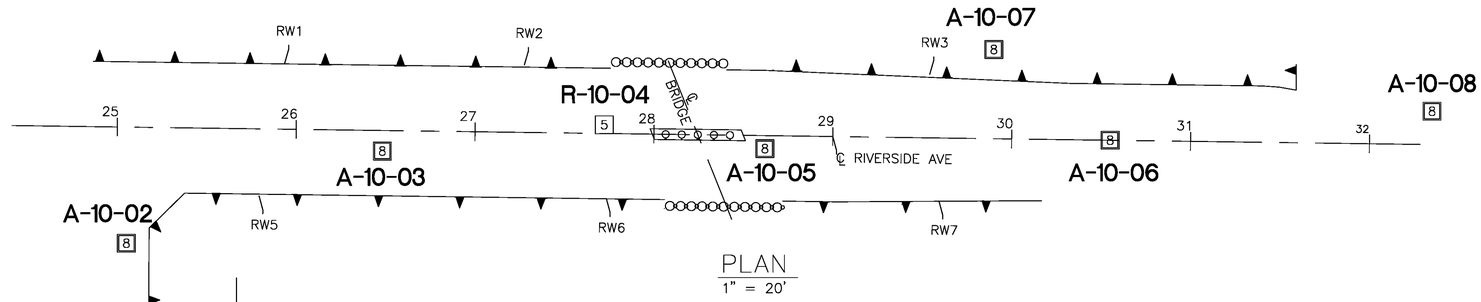

PLAN
1" = 20'

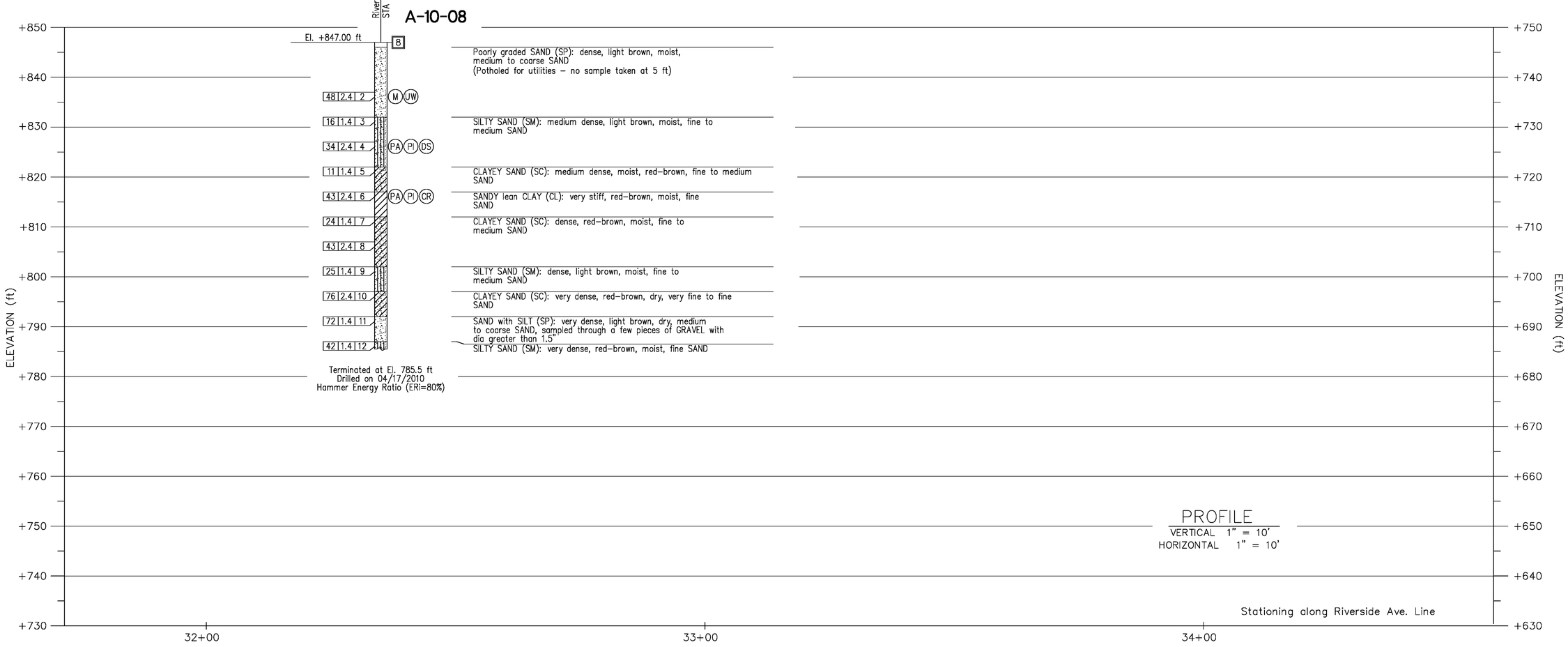

PROFILE
VERTICAL 1" = 10'
HORIZONTAL 1" = 10'

ASBUILT

BID NO. 7185

COMPLETION DATE 03/25/2016

R.E. NAME BONAVENTURE EZEJI

DIGALERT
DIAL TOLL FREE
1-800-422-4133
AT LEAST TWO DAYS BEFORE YOU DIG
UNDERGROUND SERVICE ALERT OF SOUTHERN CALIFORNIA

Earth Mechanics, Inc.
Geotechnical and Earthquake Engineering
17800 Newhope St., Ste. B
Fountain Valley, CA 92708
DATE

REGISTERED PROFESSIONAL ENGINEER
ERIC BROWN
NO. GE 2806
EXP. 6-30-2014
GEOTECHNICAL
STATE OF CALIFORNIA

MARK	REVISIONS	APPR.	DATE

DESIGNED BY - DRAWN BY - CHECKED BY -

BRIDGE #: 56C0601

UPRR BRIDGE 55.54 LOS ANGELES SUB

CITY OF RIVERSIDE, CALIFORNIA
PUBLIC WORKS DEPARTMENT

RIVERSIDE AVE UNDERPASS

LOG OF TEST BORINGS 4 OF 6

HORIZ. SCALE: AS SHOWN VERT. SCALE: AS SHOWN

STRUCTURE SHEET NO. S58

ACCT. NO. -
W.O. NO. -

R-4240

SHEET 144 OF 146

FILE NO.

REFERENCE: CALTRANS SOIL & ROCK LOGGING, CLASSIFICATION, AND PRESENTATION MANUAL (JUNE 2007)

CEMENTATION	
Description	Criteria
Weak	Crumbles or breaks with handling or little finger pressure.
Moderate	Crumbles or breaks with considerable finger pressure.
Strong	Will not crumble or break with finger pressure.

BOREHOLE IDENTIFICATION		
Symbol	Hole Type	Description
Size	A	Auger Boring
Size	R P	Rotary drilled boring Rotary percussion boring (air)
Size	R	Rotary drilled diamond core
Size	HD HA	Hand driven (1–inch soil tube) Hand Auger
	D	Dynamic Cone Penetration Boring
	CPT	Cone Penetration Test (ASTM D 5778–95)
	O	Other
Note: Size in inches.		

CONSISTENCY OF COHESIVE SOILS				
Description	Unconfined Compressive Strength (tsf)	Pocket Penetrometer Measurement (tsf)	Torvane Measurement (tsf)	Field Approximation
Very Soft	< 0.25	< 0.25	< 0.12	Easily penetrated several inches by fist
Soft	0.25 to 0.50	0.25 to 0.50	0.12 to 0.25	Easily penetrated several inches by thumb
Medium Stiff	0.50 to 1.0	0.50 to 1.0	0.25 to 0.50	Penetrated several inches by thumb with moderate effort
Stiff	1 to 2	1 to 2	0.50 to 1.0	Readily indented by thumb but penetrated only with great effort
Very Stiff	2 to 4	2 to 4	1.0 to 2.0	Readily indented by thumbnail
Hard	> 4.0	> 4.0	> 2.0	Indented by thumbnail with difficulty

PLASTICITY OF FINE-GRAINED SOILS	
Description	Criteria
Nonplastic	A 1/8–inch thread cannot be rolled at any water content.
Low	The thread can barely be rolled and the lump cannot be formed when drier than the plastic limit.
Medium	The thread is easy to roll and not much time is required to reach the plastic limit. The thread cannot be rerolled after reaching the plastic limit. The lump crumbles when drier than the plastic limit.
High	It takes considerable time rolling and kneading to reach the plastic limit. The thread can be rerolled several times after reaching the plastic limit. The lump can be formed without crumbling when drier than the plastic limit.

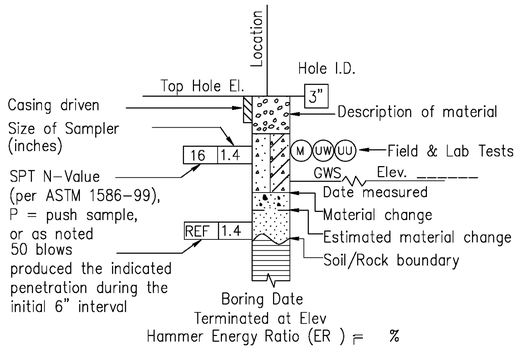

ROTARY BORING

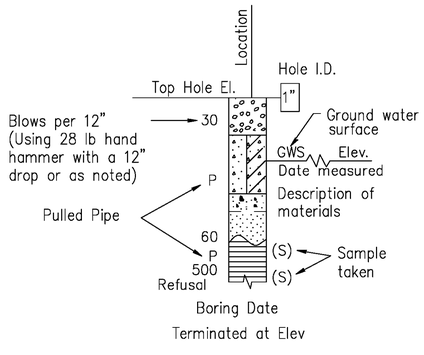

HAND BORING

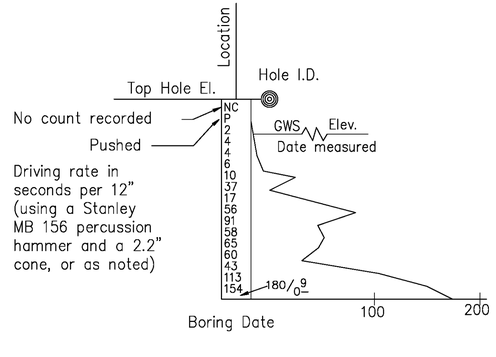

DYNAMIC CONE PENETRATION BORING

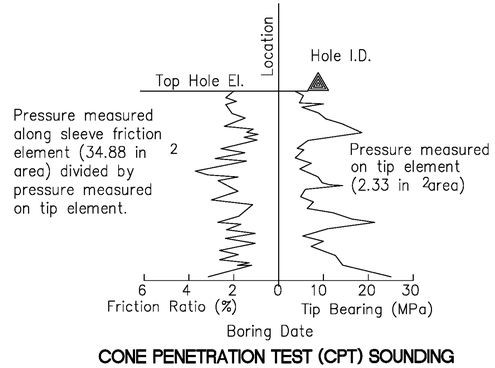

CONE PENETRATION TEST (CPT) SOUNDING

BRIDGE #: 56C0601

ASBUILT

BID NO. 7185

COMPLETION DATE 03/25/2016

R.E. NAME BONAVENTURE EZEJI

DIGALERT
DIAL TOLL FREE 1-800-422-4133
AT LEAST TWO DAYS BEFORE YOU DIG
UNDERGROUND SERVICE ALERT OF SOUTHERN CALIFORNIA

Earth Mechanics, Inc.
Geotechnical and Earthquake Engineering
17800 Newhope St., Ste. B
Fountain Valley, CA 92708

DATE

REGISTERED PROFESSIONAL ENGINEER ERIC BROWN NO. GE 2806 EXP. 6-30-2014 GEOTECHNICAL STATE OF CALIFORNIA

MARK	REVISIONS	APPR.	DATE

DESIGNED BY – DRAWN BY – CHECKED BY –

UPRR BRIDGE 55.54 LOS ANGELES SUB

CITY OF RIVERSIDE, CALIFORNIA
PUBLIC WORKS DEPARTMENT

RIVERSIDE AVE UNDERPASS

LOG OF TEST BORINGS 5 OF 6

HORIZ. SCALE: AS SHOWN VERT. SCALE: AS SHOWN

STRUCTURE SHEET NO. S59

ACCT. NO. –
W.O. NO. –

R–4240

SHEET 145 OF 146

FILE NO.

REFERENCE: CALTRANS SOIL & ROCK LOGGING, CLASSIFICATION, AND PRESENTATION MANUAL (JUNE 2007)

GROUP SYMBOLS AND NAMES

Graphic/Symbol	Group Names	Graphic/Symbol	Group Names
GW	Well-graded GRAVEL Well-graded GRAVEL with SAND	CL	Lean CLAY Lean CLAY with SAND Lean CLAY with GRAVEL SANDY lean CLAY SANDY lean CLAY with GRAVEL GRAVELLY lean CLAY GRAVELLY lean CLAY with SAND
GP	Poorly graded GRAVEL Poorly graded GRAVEL with SAND		
GW-GM	Well-graded GRAVEL with SILT Well-graded GRAVEL with SILT and SAND	CL-ML	SILTY CLAY SILTY CLAY with SAND SILTY CLAY with GRAVEL SANDY SILTY CLAY SANDY SILTY CLAY with GRAVEL GRAVELLY SILTY CLAY GRAVELLY SILTY CLAY with SAND
GW-GC	Well-graded GRAVEL with CLAY (or SILTY CLAY) Well-graded GRAVEL with CLAY and SAND (or SILTY CLAY and SAND)		
GP-GM	Poorly graded GRAVEL with SILT Poorly graded GRAVEL with SILT and SAND	ML	SILT SILT with SAND SILT with GRAVEL SANDY SILT SANDY SILT with GRAVEL GRAVELLY SILT GRAVELLY SILT with SAND
GP-GC	Poorly graded GRAVEL with CLAY (or SILTY CLAY) Poorly graded GRAVEL with CLAY and SAND (or SILTY CLAY and SAND)		
GM	SILTY GRAVEL SILTY GRAVEL with SAND	OL	ORGANIC lean CLAY ORGANIC lean CLAY with SAND ORGANIC lean CLAY with GRAVEL SANDY ORGANIC lean CLAY SANDY ORGANIC lean CLAY with GRAVEL GRAVELLY ORGANIC lean CLAY GRAVELLY ORGANIC lean CLAY with SAND
GC	CLAYEY GRAVEL CLAYEY GRAVEL with SAND		
GC-GM	SILTY, CLAYEY GRAVEL SILTY, CLAYEY GRAVEL with SAND	OL	ORGANIC SILT ORGANIC SILT with SAND ORGANIC SILT with GRAVEL SANDY ORGANIC SILT SANDY ORGANIC SILT with GRAVEL GRAVELLY ORGANIC SILT GRAVELLY ORGANIC SILT with SAND
SW	Well-graded SAND Well-graded SAND with GRAVEL		
SP	Poorly graded SAND Poorly graded SAND with GRAVEL	CH	Fat CLAY Fat CLAY with SAND Fat CLAY with GRAVEL SANDY fat CLAY SANDY fat CLAY with GRAVEL GRAVELLY fat CLAY GRAVELLY fat CLAY with SAND
SW-SM	Well-graded SAND with SILT Well-graded SAND with SILT and GRAVEL		
SW-SC	Well-graded SAND with CLAY (or SILTY CLAY) Well-graded SAND with CLAY and GRAVEL (or SILTY CLAY and GRAVEL)	MH	Elastic SILT Elastic SILT with SAND Elastic SILT with GRAVEL SANDY elastic SILT SANDY elastic SILT with GRAVEL GRAVELLY elastic SILT GRAVELLY elastic SILT with SAND
SP-SM	Poorly graded SAND with SILT Poorly graded SAND with SILT and GRAVEL		
SP-SC	Poorly graded SAND with CLAY (or SILTY CLAY) Poorly graded SAND with CLAY and GRAVEL (or SILTY CLAY and GRAVEL)	OH	ORGANIC fat CLAY ORGANIC fat CLAY with SAND ORGANIC fat CLAY with GRAVEL SANDY ORGANIC fat CLAY SANDY ORGANIC fat CLAY with GRAVEL GRAVELLY ORGANIC fat CLAY GRAVELLY ORGANIC fat CLAY with SAND
SM	SILTY SAND SILTY SAND with GRAVEL		
SC	CLAYEY SAND CLAYEY SAND with GRAVEL	OH	ORGANIC elastic SILT ORGANIC elastic SILT with SAND ORGANIC elastic SILT with GRAVEL SANDY ORGANIC elastic SILT SANDY ORGANIC elastic SILT with GRAVEL GRAVELLY ORGANIC elastic SILT GRAVELLY ORGANIC elastic SILT with SAND
SC-SM	SILTY, CLAYEY SAND SILTY, CLAYEY SAND with GRAVEL		
PT	PEAT	OL/OH	ORGANIC SOIL ORGANIC SOIL with SAND ORGANIC SOIL with GRAVEL SANDY ORGANIC SOIL SANDY ORGANIC SOIL with GRAVEL GRAVELLY ORGANIC SOIL GRAVELLY ORGANIC SOIL with SAND
	COBBLES COBBLES and BOULDERS BOULDERS		

FIELD AND LABORATORY TESTING

- (C) Consolidation (ASTM D 2435)
- (CL) Collapse Potential (ASTM D 5333)
- (CP) Compaction Curve (CTM 216)
- (CR) Corrosivity Testing (CTM 643, CTM 422, CTM 417)
- (CU) Consolidated Undrained Triaxial (ASTM D 4767)
- (DS) Direct Shear (ASTM D 3080)
- (EI) Expansion Index (ASTM D 4829)
- (M) Moisture Content (ASTM D 2216)
- (OC) Organic Content–% (ASTM D 2974)
- (P) Permeability (CTM 220)
- (PA) Particle Size Analysis (ASTM D 422)
- (PI) Plasticity Index (AASHTO T 90) Liquid Limit (AASHTO T 89)
- (PL) Point Load Index (ASTM D 5731)
- (PM) Pressure Meter
- (PP) Pocket Penetrometer
- (R) R-Value (CTM 301)
- (SE) Sand Equivalent (CTM 217)
- (SG) Specific Gravity (AASHTO T 100)
- (SL) Shrinkage Limit (ASTM D 427)
- (SW) Swell Potential (ASTM D 4546)
- (TV) Pocket Torvane
- (UC) Unconfined Compression–Soil (ASTM D 2166) Unconfined Compression–Rock (ASTM D 2938)
- (UU) Unconsolidated Undrained Triaxial (ASTM D 2850)
- (UW) Unit Weight (ASTM D 4767)
- (VS) Vane Shear (AASHTO T 223)

APPARENT DENSITY OF COHESIONLESS SOILS

Description	SPT N_{60} (Blows / 12 inches)
Very loose	0 – 4
Loose	5 – 10
Medium Dense	11 – 30
Dense	31 – 50
Very Dense	> 50

MOISTURE

Description	Criteria
Dry	Absence of moisture, dusty, dry to the touch
Moist	Damp but no visible water
Wet	Visible free water, usually soil is below water table

PERCENT OR PROPORTION OF SOILS

Description	Criteria
Trace	Particles are present but estimated to be less than 5%
Few	5 to 10%
Little	15 to 25%
Some	30 to 45%
Mostly	50 to 100%

PARTICLE SIZE

Description		Size
Boulder		> 12"
Cobble		3" to 12"
Gravel	Coarse	3/4" to 3"
	Fine	No. 4 to 3/4"
Sand	Coarse	No. 10 to No. 4
	Medium	No. 40 to No. 10
	Fine	No. 200 to No. 40

BRIDGE #: 56C0601

UPRR BRIDGE 55.54 LOS ANGELES SUB

ASBUILT
BID NO. 7185
COMPLETION DATE 03/25/2016
R.E. NAME BONAVENTURE EZEJI

DIGALERT
DIAL TOLL FREE
1-800-422-4133
AT LEAST TWO DAYS BEFORE YOU DIG
UNDERGROUND SERVICE ALERT OF SOUTHERN CALIFORNIA

Earth Mechanics, Inc.
Geotechnical and Earthquake Engineering
17800 Newhope St., Ste. B
Fountain Valley, CA 92708
DATE

REGISTERED PROFESSIONAL ENGINEER
ERIC BROWN
NO. GE 2806
EXP. 6-30-2014
GEOTECHNICAL
STATE OF CALIFORNIA

MARK	REVISIONS	APPR.	DATE

DESIGNED BY - DRAWN BY - CHECKED BY -

CITY OF RIVERSIDE, CALIFORNIA
PUBLIC WORKS DEPARTMENT
RIVERSIDE AVE UNDERPASS
LOG OF TEST BORINGS 6 OF 6
HORIZ. SCALE: AS SHOWN VERT. SCALE: AS SHOWN

STRUCTURE SHEET NO. S60
ACCT. NO. -
W.O. NO. -
R-4240
SHEET 146 OF 146
FILE NO.